BA02106D/06/EN/03.26-00
71756569
2026-04-01

Valid as of version
01.00.zz (Device firmware)

Operating Instructions
Proline Promag H 300

Electromagnetic flowmeter
PROFINET over Ethernet-APL

ethernet-apl™
advanced physical layer

Endress+Hauser
People for Process Automation

- Make sure the document is stored in a safe place such that it is always available when working on or with the device.
- To avoid danger to individuals or the facility, read the "Basic safety instructions" section carefully, as well as all other safety instructions in the document that are specific to working procedures.
- The manufacturer reserves the right to modify technical data without prior notice. Your Endress+Hauser sales organization will supply you with current information and updates to this manual.

Table of contents

1 About this document 6
1.1 Document function 6
1.2 Symbols 6
1.2.1 Safety symbols 6
1.2.2 Electrical symbols 6
1.2.3 Communication-specific symbols 6
1.2.4 Tool symbols 7
1.2.5 Symbols for certain types of information 7
1.2.6 Symbols in graphics 7
1.3 Documentation 8
1.4 Registered trademarks 8

2 Safety instructions 9
2.1 Requirements for the personnel 9
2.2 Intended use 9
2.3 Workplace safety 10
2.4 Operational safety 10
2.5 Product safety 10
2.6 IT security 10
2.7 Device-specific IT security 11
2.7.1 Protecting access via hardware write protection 11
2.7.2 Protecting access via a password 11
2.7.3 Access via web server 12
2.7.4 Access via service interface (port 2): CDI-RJ45 12

3 Product description 13
3.1 Product design 13

4 Incoming acceptance and product identification 14
4.1 Incoming acceptance 14
4.2 Product identification 14
4.2.1 Transmitter nameplate 15
4.2.2 Sensor nameplate 16
4.2.3 Symbols on the device 17

5 Storage and transport 18
5.1 Storage conditions 18
5.2 Transporting the product 18
5.2.1 Measuring devices without lifting lugs 18
5.2.2 Measuring devices with lifting lugs . . 19
5.2.3 Transporting with a fork lift 19
5.3 Packaging disposal 19

6 Installation 19
6.1 Installation requirements 19
6.1.1 Installation position 19
6.1.2 Environmental and process requirements 25
6.1.3 Special installation instructions 26
6.2 Installing the device 26
6.2.1 Required tools 26
6.2.2 Preparing the measuring device 27
6.2.3 Turning the transmitter housing 27
6.2.4 Turning the display module 28
6.3 Post-installation check 28

7 Electrical connection 29
7.1 Electrical safety 29
7.2 Connecting requirements 29
7.2.1 Required tools 29
7.2.2 Requirements for connection cable . . . 29
7.2.3 Terminal assignment 31
7.2.4 Available device plugs for Proline 300 31
7.2.5 Pin assignment of device plug 31
7.2.6 Preparing the device 31
7.3 Connecting the device 32
7.3.1 Connecting the transmitter 32
7.3.2 Integrating the transmitter into a network 35
7.3.3 Connecting the remote display and operating module DKX001 36
7.4 Ensuring potential equalization 36
7.4.1 Requirements 36
7.4.2 Connection example, standard scenario 36
7.4.3 Connection example in special situations 37
7.5 Special connection instructions 38
7.5.1 Connection examples 38
7.6 Hardware settings 40
7.6.1 Setting the device name 40
7.6.2 Activating the default IP address 42
7.7 Ensuring the degree of protection 42
7.8 Post-connection check 43

8 Operation options 44
8.1 Overview of operation options 44
8.2 Structure and function of the operating menu 45
8.2.1 Structure of the operating menu 45
8.2.2 Operating philosophy 46
8.3 Access to operating menu via local display . . . 47
8.3.1 Operational display 47
8.3.2 Navigation view 49
8.3.3 Editing view 51
8.3.4 Operating elements 53
8.3.5 Opening the context menu 53
8.3.6 Navigating and selecting from list . . . 55
8.3.7 Calling the parameter directly 55

8.3.8 Calling up help text 56
8.3.9 Changing the parameters 56
8.3.10 User roles and related access authorization 57
8.3.11 Disabling write protection via access code 57
8.3.12 Enabling and disabling the keypad lock 58
8.4 Access to operating menu via web browser . . . 58
8.4.1 Function range 58
8.4.2 Requirements 59
8.4.3 Connecting the device 60
8.4.4 Logging on 62
8.4.5 User interface 63
8.4.6 Disabling the Web server 64
8.4.7 Logging out 64
8.5 Operation via SmartBlue app 65
8.6 Access to the operating menu via the operating tool 66
8.6.1 Connecting the operating tool 66
8.6.2 FieldCare 68
8.6.3 DeviceCare 69
8.6.4 SIMATIC PDM 69

9 System integration 70

9.1 Overview of device description files 70
9.1.1 Current version data for the device . . . 70
9.1.2 Operating tools 70
9.2 Device master file (GSD) 70
9.2.1 File name of the manufacturer-specific device master file (GSD) 71
9.2.2 File name of the PA Profile device master file (GSD) 71
9.3 Cyclic data transmission 72
9.3.1 Overview of the modules 72
9.3.2 Description of the modules 72
9.3.3 Status coding 78
9.3.4 Factory setting 79
9.4 System redundancy S2 80

10 Commissioning 81

10.1 Post-installation and post-connection check . . 81
10.2 Switching on the measuring instrument 81
10.3 Connecting via FieldCare 81
10.4 Setting the operating language 81
10.5 Configuring the device 82
10.5.1 Displaying the communication interface 83
10.5.2 Setting the system units 85
10.5.3 Displaying the I/O configuration 86
10.5.4 Configuring the current input 87
10.5.5 Configuring the status input 89
10.5.6 Configuring the current output 89
10.5.7 "Pulse/frequency/switch output 1 to n" wizard 93
10.5.8 Configuring the relay output 97
10.5.9 Configuring the double pulse output . . 99
10.5.10 Configuring the local display 100
10.5.11 Configuring the low flow cut off 102
10.5.12 Configuring empty pipe detection . . 104
10.5.13 Configuring flow damping 105
10.6 Advanced settings 107
10.6.1 Using the parameter to enter the access code 108
10.6.2 Carrying out a sensor adjustment . . . 108
10.6.3 Configuring the totalizer 108
10.6.4 Carrying out additional display configurations 110
10.6.5 WLAN configuration 113
10.6.6 Performing electrode cleaning 115
10.6.7 Performing Heartbeat basic setup . . 116
10.6.8 Configuration management 117
10.6.9 Using parameters for device administration 118
10.7 Simulation 120
10.8 Protecting settings from unauthorized access 122
10.8.1 Write protection via access code . . . 122
10.8.2 Write protection via write protection switch 124

11 Operation 126

11.1 Reading the device locking status 126
11.2 Adjusting the operating language 126
11.3 Configuring the display 126
11.4 Reading off measured values 126
11.4.1 "Process variables" submenu 127
11.4.2 Totalizer 128
11.4.3 "Input values" submenu 128
11.4.4 Output values 130
11.5 Adapting the measuring device to the process conditions 131
11.6 Performing a totalizer reset 132
11.6.1 Function scope of "Control Totalizer" parameter 132
11.6.2 Function range of "Reset all totalizers" parameter 132
11.7 Displaying the measured value history 133

12 Diagnostics and troubleshooting . . 136

12.1 General troubleshooting 136
12.2 Diagnostic information via LEDs 138
12.2.1 Transmitter 138
12.3 Diagnostic information on local display 140
12.3.1 Diagnostic message 140
12.3.2 Calling up remedial actions 142
12.4 Diagnostic information in the web browser . . 142
12.4.1 Diagnostic options 142
12.4.2 Calling up remedial actions 143
12.5 Diagnostic information in FieldCare or DeviceCare 143
12.5.1 Diagnostic options 143
12.5.2 Calling up remedy information 144
12.6 Adapting the diagnostic information 145
12.6.1 Adapting the diagnostic behavior . . . 145
12.7 Overview of diagnostic information 146
12.7.1 Diagnostic of sensor 146

12.7.2 Diagnostic of electronic 148
12.7.3 Diagnostic of configuration 155
12.7.4 Diagnostic of process 162
12.8 Pending diagnostic events 165
12.9 Diagnostic list 166
12.10 Event logbook 166
12.10.1 Reading out the event logbook 166
12.10.2 Filtering the event logbook 167
12.10.3 Overview of information events 167
12.11 Resetting the device 169
12.11.1 Function scope of the "Device reset" parameter 169
12.12 Device information 169
12.13 Firmware history 171

13 Maintenance 172

13.1 Maintenance tasks 172
13.1.1 Cleaning 172
13.1.2 Replacing seals 172
13.2 Measuring and test equipment 172
13.3 Maintenance services 172

14 Repair 173

14.1 General notes 173
14.1.1 Repair and conversion concept 173
14.1.2 Notes for repair and conversion 173
14.2 Spare parts 173
14.3 Repair services 173
14.4 Return 173
14.5 Disposal 174
14.5.1 Removing the measuring instrument 174
14.5.2 Disposing of the measuring instrument 174

15 Accessories 175

15.1 Device-specific accessories 175
15.1.1 For the transmitter 175
15.1.2 For the sensor 176
15.2 Communication-specific accessories 176
15.3 Service-specific accessories 177
15.4 System components 177

16 Technical data 178

16.1 Application 178
16.2 Function and system design 178
16.3 Input 178
16.4 Output 182
16.5 Power supply 187
16.6 Performance characteristics 188
16.7 Installation 191
16.8 Environment 191
16.9 Process 192
16.10 Mechanical construction 193
16.11 Display and user interface 197
16.12 Certificates and approvals 201
16.13 Application packages 204
16.14 Accessories 205
16.15 Documentation 205

Index 208

1 About this document

1.1 Document function

These Operating Instructions contain all the information required in the various life cycle phases of the device: from product identification, incoming acceptance and storage, to installation, connection, operation and commissioning, through to troubleshooting, maintenance and disposal.

1.2 Symbols

1.2.1 Safety symbols

⚠ DANGER
This symbol alerts you to a dangerous situation. Failure to avoid this situation will result in serious or fatal injury.

⚠ WARNING
This symbol alerts you to a potentially dangerous situation. Failure to avoid this situation can result in serious or fatal injury.

⚠ CAUTION
This symbol alerts you to a potentially dangerous situation. Failure to avoid this situation can result in minor or medium injury.

NOTICE
This symbol alerts you to a potentially harmful situation. Failure to avoid this situation can result in damage to the product or something in its vicinity.

1.2.2 Electrical symbols

Symbol	Meaning
⎓	Direct current
∼	Alternating current
≂	Direct current and alternating current
⏚	**Ground connection** A grounded terminal which, as far as the operator is concerned, is grounded via a grounding system.
⏚	**Protective earth (PE)** Ground terminals that must be connected to ground prior to establishing any other connections. The ground terminals are located on the interior and exterior of the device: ▪ Interior ground terminal: protective earth is connected to the mains supply. ▪ Exterior ground terminal: device is connected to the plant grounding system.

1.2.3 Communication-specific symbols

Symbol	Meaning
📶	**Wireless Local Area Network (WLAN)** Communication via a wireless, local area network
◉	**LED** LED is off.

Symbol	Meaning
	LED LED is on.
	LED LED flashing.

1.2.4 Tool symbols

Symbol	Meaning
	Flat-blade screwdriver
	Allen key
	Open-end wrench

1.2.5 Symbols for certain types of information

Symbol	Meaning
	Permitted Procedures, processes or actions that are permitted.
	Preferred Procedures, processes or actions that are preferred.
	Forbidden Procedures, processes or actions that are forbidden.
	Tip Indicates additional information.
	Reference to documentation
	Reference to page
	Reference to graphic
▶	Notice or individual step to be observed
1., 2., 3....	Series of steps
	Result of a step
	Help in the event of a problem
	Visual inspection

1.2.6 Symbols in graphics

Symbol	Meaning
1, 2, 3, ...	Item numbers
1., 2., 3., ...	Series of steps
A, B, C, ...	Views
A-A, B-B, C-C, ...	Sections
EX	Hazardous area

Symbol	Meaning
	Safe area (non-hazardous area)
	Flow direction

1.3 Documentation

For an overview of the scope of the associated Technical Documentation, refer to the following:

- *Device Viewer* (www.endress.com/deviceviewer): Enter the serial number from the nameplate
- *Endress+Hauser Operations app*: Enter serial number from nameplate or scan matrix code on nameplate.

The following document types are available in the Downloads area of the Endress+Hauser website (www.endress.com/downloads), depending on the product configuration:

Document type	Purpose and content of the document
Technical Information (TI)	**Planning aid** This document contains all the technical data on the product and provides an overview of everything that can be ordered with the product.
Brief Operating Instructions (KA)	**Quick guide to obtaining the first measured value** The Operating Instructions contain all the essential information about the product from incoming acceptance to initial commissioning.
Operating Instructions (BA)	**Reference** The Operating Instructions contain the information that is required in the various phases of the life cycle of the product: From product identification, incoming acceptance and storage, to mounting, connection, operation and commissioning through to troubleshooting, maintenance and disposal.
Description of Device Parameters (GP)	**Reference for parameters** The document contains detailed explanations of readable or configurable parameters in the product. The description is aimed at those who work with the product over its entire life cycle and perform specific configurations.
Safety Instructions (XA)	Safety Instructions for electrical equipment in hazardous areas are supplied with the product depending on the approval. These are an integral part of the Operating Instructions. The nameplate indicates the Safety Instructions (XA) that are relevant to the product.
Supplementary device-dependent documentation (SD/FY)	Always comply strictly with the instructions in the relevant supplementary documentation. The supplementary documentation is an integral part of the product documentation.

1.4 Registered trademarks

Ethernet-APL™
Registered trademark of the PROFIBUS Nutzerorganisation e.V. (PROFIBUS User Organization), Karlsruhe, Germany

TRI-CLAMP®
Registered trademark of Ladish & Co., Inc., Kenosha, USA

2 Safety instructions

2.1 Requirements for the personnel

The personnel for installation, commissioning, diagnostics and maintenance must fulfill the following requirements:
- Trained, qualified specialists must have a relevant qualification for this specific function and task.
- Are authorized by the plant owner/operator.
- Are familiar with federal/national regulations.
- Before starting work, read and understand the instructions in the manual and supplementary documentation as well as the certificates (depending on the application).
- Follow instructions and comply with basic conditions.

The operating personnel must fulfill the following requirements:
- Are instructed and authorized according to the requirements of the task by the facility's owner-operator.
- Follow the instructions in this manual.

2.2 Intended use

Application and media
The measuring instrument described in this manual is intended only for the flow measurement of liquids with a minimum conductivity of 5 µS/cm.

Depending on the version ordered, the measuring instrument can also measure potentially explosive, flammable, poisonous and oxidizing media.

Measuring instruments for use in hazardous areas, in hygienic applications, or where there is an increased risk due to pressure, are specially labeled on the nameplate.

To ensure that the measuring instrument remains in proper condition during the operating time:
- Only use the measuring instrument in full compliance with the data on the nameplate and the general conditions listed in the manual and supplementary documentation.
- Using the nameplate, check whether the ordered device is permitted for the intended use in the hazardous area (e.g. explosion protection, pressure vessel safety).
- Use the measuring instrument only for media against which the materials in contact with the process are sufficiently resistant.
- Keep within the specified pressure and temperature range.
- Keep within the specified ambient temperature range.
- Protect the measuring instrument permanently against corrosion from environmental influences.

Incorrect use
Non-designated use can compromise safety. The manufacturer is not liable for damage caused by improper or non-designated use.

⚠ WARNING
Danger of breakage due to corrosive or abrasive fluids and ambient conditions!
- Verify the compatibility of the process fluid with the sensor material.
- Ensure the resistance of all wetted materials during the process.
- Keep within the specified pressure and temperature range.

NOTICE

Verification for borderline cases:

- For special fluids and fluids for cleaning, Endress+Hauser is glad to provide assistance in verifying the corrosion resistance of fluid-wetted materials, but does not accept any warranty or liability as minute changes in the temperature, concentration or level of contamination in the process can alter the corrosion resistance properties.

Residual risks

WARNING

Risk of hot or cold burns! The use of media and electronics with high or low temperatures can produce hot or cold surfaces on the device.

- Mount suitable touch protection.

2.3 Workplace safety

For work on and with the device:

- Wear the required personal protective equipment according to federal/national regulations.

2.4 Operational safety

Damage to the device!

- Operate the device in proper technical condition and fail-safe condition only.
- The operator is responsible for the interference-free operation of the device.

Modifications to the device

Unauthorized modifications to the device are not permitted and can lead to unforeseeable dangers!

- If modifications are nevertheless required, consult with the manufacturer.

Repair

To ensure continued operational safety and reliability:

- Carry out repairs on the device only if they are expressly permitted.
- Observe federal/national regulations pertaining to the repair of an electrical device.
- Use only original spare parts and accessories.

2.5 Product safety

This state-of-the-art device is designed and tested in accordance with good engineering practice to meet operational safety standards. It left the factory in a condition in which it is safe to operate.

It meets general safety standards and legal requirements. It also complies with the EU directives listed in the device-specific EU declaration of conformity. The manufacturer confirms this by affixing the CE mark.

2.6 IT security

The manufacturer warranty is valid only if the product is installed and used as described in the Operating Instructions. The product is equipped with security mechanisms to protect it against any inadvertent changes to the settings.

IT security measures, which provide additional protection for the product and associated data transfer, must be implemented by the operators themselves in line with their security standards.

2.7 Device-specific IT security

The device offers a range of specific functions to support protective measures on the operator's side. These functions can be configured by the user and guarantee greater in-operation safety if used correctly. The following list provides an overview of the most important functions:

Function/interface	Factory setting	Recommendation
Write protection via hardware write protection switch → 🗎 11	Not enabled	On an individual basis following risk assessment
Access code (also applies to web server login or FieldCare connection) → 🗎 11	Not enabled (0000)	Assign a customized access code during commissioning
WLAN (order option in display module)	Enabled	On an individual basis following risk assessment
WLAN security mode	Enabled (WPA2-PSK)	Do not change
WLAN passphrase (Password) → 🗎 12	Serial number	Assign an individual WLAN passphrase during commissioning
WLAN mode	Access point	On an individual basis following risk assessment
Web server → 🗎 12	Enabled	On an individual basis following risk assessment
Service interface CDI-RJ45 → 🗎 12	Enabled	-

2.7.1 Protecting access via hardware write protection

Write access to the parameters of the device via the local display, web browser or operating tool (e.g. FieldCare, DeviceCare) can be disabled via a write protection switch (DIP switch on the main electronics module). When hardware write protection is enabled, only read access to the parameters is possible.

Hardware write protection is disabled when the device is delivered → 🗎 124.

2.7.2 Protecting access via a password

Different passwords are available to protect write access to the device parameters or access to the device via the WLAN interface.

- User-specific access code
  Protect write access to the device parameters via the local display, web browser or operating tool (e.g. FieldCare, DeviceCare). Access authorization is clearly regulated through the use of a user-specific access code.
- WLAN passphrase
  The network key protects a connection between an operating unit (e.g. notebook or tablet) and the device via the WLAN interface which can be ordered as an option.
- Infrastructure mode
  When the device is operated in infrastructure mode, the WLAN passphrase corresponds to the WLAN passphrase configured on the operator side.

User-specific access code

Local display, web browser and operating tool (e.g. FieldCare, DeviceCare)

- Write access to the device parameters via the local display, web browser or operating tool (e.g. FieldCare, DeviceCare) can be protected by the modifiable, user-specific access code→ 🗎 122.
- When delivered, the device does not have an access code; the default value is *0000* (open).

WLAN passphrase: Operation as WLAN access point

A connection between an operating unit (e.g. notebook or tablet) and the device via the WLAN interface (→ 📖 67), which can be ordered as an optional extra, is protected by the network key. The WLAN authentication of the network key complies with the IEEE 802.11 standard.

When the device is delivered, the network key is pre-defined depending on the device. It can be changed via the **WLAN settings** submenu in the **WLAN passphrase** parameter (→ 📖 114).

Infrastructure mode

A connection between the device and WLAN access point is protected by means of an SSID and passphrase on the system side. Please contact the relevant system administrator for access.

General notes on the use of passwords

- The access code and network key supplied with the device should be changed during commissioning for security reasons.
- Follow the general rules for generating a secure password when defining and managing the access code or network key.
- The user is responsible for the management and careful handling of the access code and network key.
- For information on configuring the access code or on what to do if you lose the password, for example, see "Write protection via access code" → 📖 122.

2.7.3 Access via web server

The integrated web server can be used to operate and configure the device by means of a web browser via Ethernet-APL , the service interface (CDI-RJ45) or via WLAN interface.

The web server is enabled when the device is delivered. The web server can be disabled if necessary via the **Web server functionality** parameter (e.g., after commissioning).

The device and status information can be hidden on the login page. This prevents unauthorized access to the information.

For detailed information on device parameters, see: Description of Device Parameters.

2.7.4 Access via service interface (port 2): CDI-RJ45

The device can be connected to a network via the service interface. Device-specific functions guarantee the secure operation of the device in a network.

The use of relevant industrial standards and guidelines that have been defined by national and international safety committees, such as IEC/ISA62443 or the IEEE, is recommended. This includes organizational security measures such as the assignment of access authorization as well as technical measures such as network segmentation.

For detailed information on connecting transmitters with an Ex de approval, see separate document "Safety instructions" (XA) for the device.

3 Product description

The device consists of a transmitter and a sensor.

The device is available as a compact version:
The transmitter and sensor form a mechanical unit.

3.1 Product design

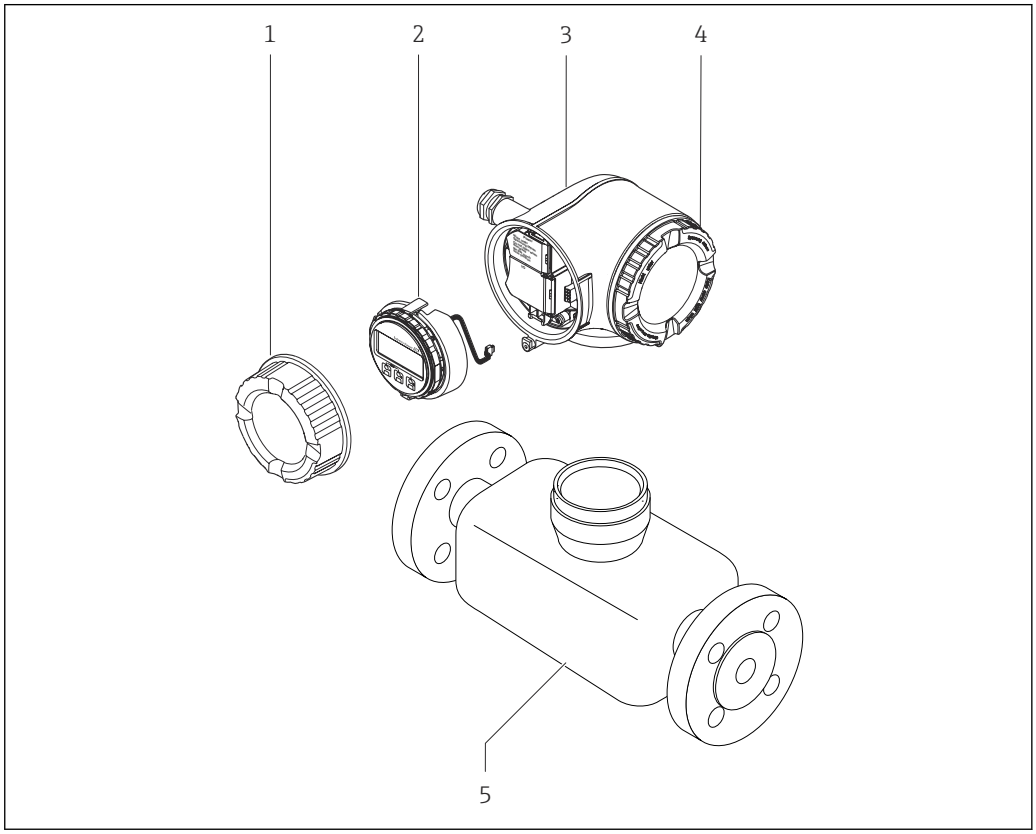

1 Important components of a measuring device

1 Connection compartment cover
2 Display module
3 Transmitter housing
4 Electronics compartment cover
5 Sensor

4 Incoming acceptance and product identification

4.1 Incoming acceptance

On receipt of the delivery:

1. Check the packaging for damage.
   ↳ Report all damage immediately to the manufacturer.
   Do not install damaged components.
2. Check the scope of delivery using the delivery note.
3. Compare the data on the nameplate with the order specifications on the delivery note.
4. Check the technical documentation and all other necessary documents, e.g. certificates, to ensure they are complete.

If one of the conditions is not satisfied, contact the manufacturer.

4.2 Product identification

The device can be identified in the following ways:
- Nameplate
- Order code with details of the device features on the delivery note
- Enter the serial numbers from the nameplates in the *Device Viewer* (www.endress.com/deviceviewer): all the information about the device is displayed.
- Enter the serial numbers from the nameplates into the *Endress+Hauser Operations app* or scan the DataMatrix code on the nameplate with the *Endress+Hauser Operations app*: all the information about the device is displayed.

For an overview of the scope of the associated Technical Documentation, refer to the following:
- The "Additional standard device documentation" and "Supplementary device-dependent documentation" sections
- The *Device Viewer*: Enter the serial number from the nameplate (www.endress.com/deviceviewer)
- The *Endress+Hauser Operations app*: Enter the serial number from the nameplate or scan the DataMatrix code on the nameplate.

4.2.1 Transmitter nameplate

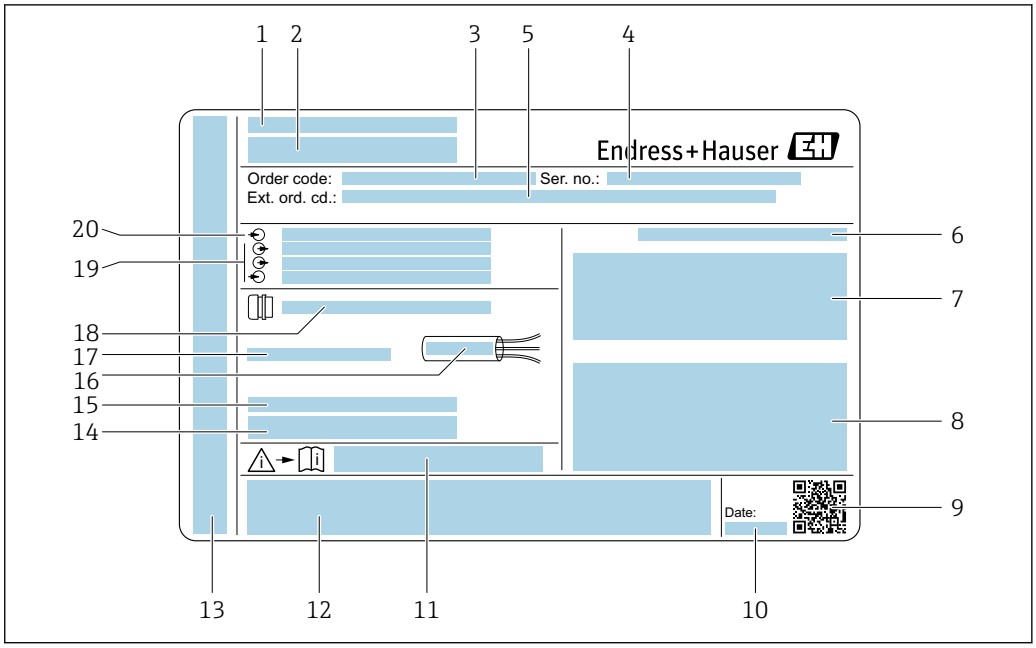

2 *Example of a transmitter nameplate*

1 *Manufacturer/certificate holder*
2 *Name of the transmitter*
3 *Order code*
4 *Serial number (Ser. no.)*
5 *Extended order code (Ext. ord. cd.)*
6 *Degree of protection*
7 *Space for approvals: use in hazardous areas*
8 *Electrical connection data: available inputs and outputs*
9 *2-D matrix code*
10 *Manufacturing date: year-month*
11 *Document number of safety-related supplementary documentation*
12 *Space for approvals and certificates: e.g. CE mark, RCM symbol*
13 *Space for degree of protection of connection and electronics compartment when used in hazardous areas*
14 *Firmware version (FW) and device revision (Dev. Rev.) from the factory*
15 *Space for additional information in the case of special products*
16 *Permitted temperature range for cable*
17 *Permitted ambient temperature (T_a)*
18 *Information on cable gland*
19 *Available inputs and outputs, supply voltage*
20 *Electrical connection data: supply voltage*

4.2.2 Sensor nameplate

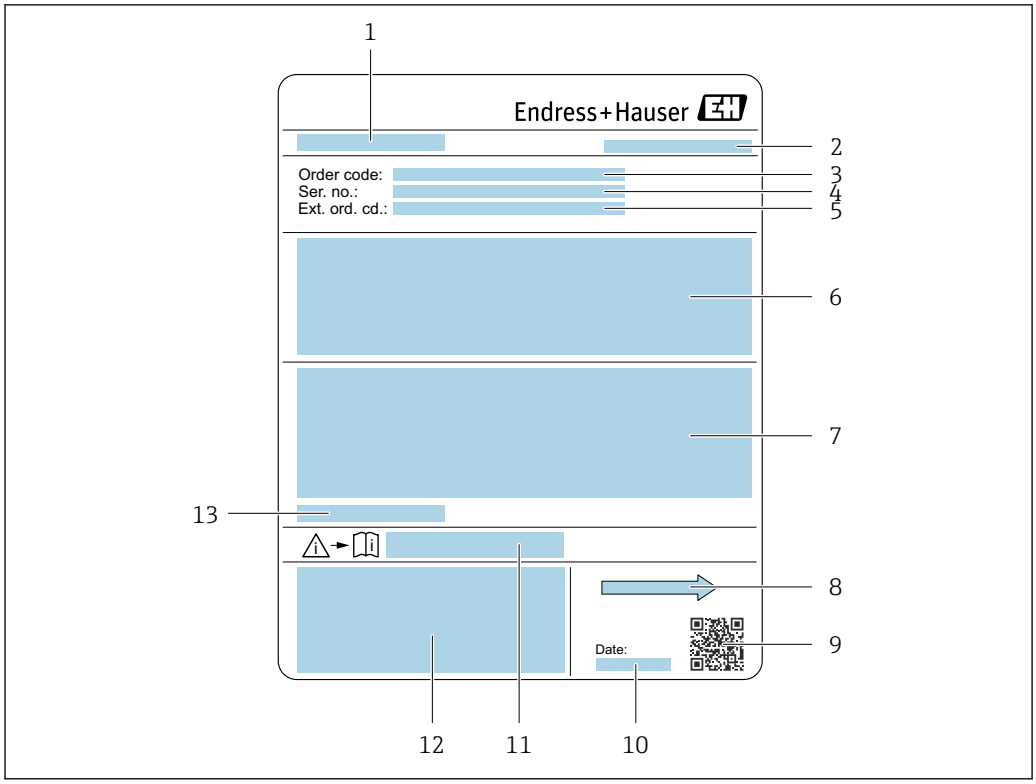

3 *Example of sensor nameplate*

1 *Name of sensor*
2 *Manufacturer/certificate holder*
3 *Order code*
4 *Serial number (Ser. no.)*
5 *Extended order code (Ext. ord. cd.)*
6 *Flow; nominal diameter of the sensor; pressure rating; nominal pressure; static pressure; medium temperature range; material of liner and electrodes*
7 *Approval information for explosion protection, Pressure Equipment Directive and degree of protection*
8 *Flow direction*
9 *2-D matrix code*
10 *Manufacturing date: year-month*
11 *Document number of safety-related supplementary documentation*
12 *CE mark, RCM symbol*
13 *Permitted ambient temperature (T_a)*

Order code
The measuring device is reordered using the order code.

Extended order code
- The device type (product root) and basic specifications (mandatory features) are always listed.
- Of the optional specifications (optional features), only the safety and approval-related specifications are listed (e.g. LA). If other optional specifications are also ordered, these are indicated collectively using the # placeholder symbol (e.g. #LA#).
- If the ordered optional specifications do not include any safety and approval-related specifications, they are indicated by the + placeholder symbol (e.g. XXXXXX-ABCDE +).

4.2.3 Symbols on the device

Symbol	Meaning
⚠	**WARNING!** This symbol alerts you to a dangerous situation. Failure to avoid this situation can result in serious or fatal injury. Please consult the documentation for the measuring instrument to discover the type of potential danger and measures to avoid it.
📖	**Reference to documentation** Refers to the corresponding device documentation.
⏚	**Protective ground connection** A terminal that must be connected to the ground prior to establishing any other connections.

5 Storage and transport

5.1 Storage conditions

Observe the following notes for storage:
- Store in the original packaging to ensure protection from shock.
- Do not remove protective covers or protective caps installed on process connections. They prevent mechanical damage to the sealing surfaces and contamination in the measuring tube.
- Protect from direct sunlight. Avoid unacceptably high surface temperatures.
- Select a storage location that excludes the possibility of condensation forming on the measuring instrument. Fungi and bacteria can damage the liner.
- Store in a dry and dust-free place.
- Do not store outdoors.

Storage temperature → 191

5.2 Transporting the product

Transport the measuring device to the measuring point in the original packaging.

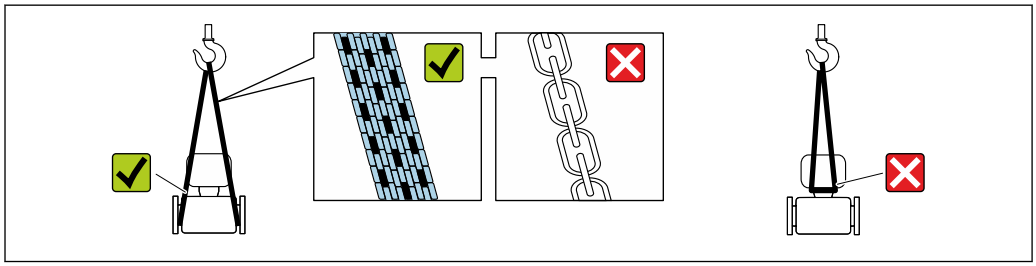

A0029252

Do not remove protective covers or caps installed on process connections. They prevent mechanical damage to the sealing surfaces and contamination in the measuring tube.

5.2.1 Measuring devices without lifting lugs

WARNING

Center of gravity of the measuring device is higher than the suspension points of the webbing slings.

Risk of injury if the measuring device slips.
- Secure the measuring device against slipping or turning.
- Observe the weight specified on the packaging (stick-on label).

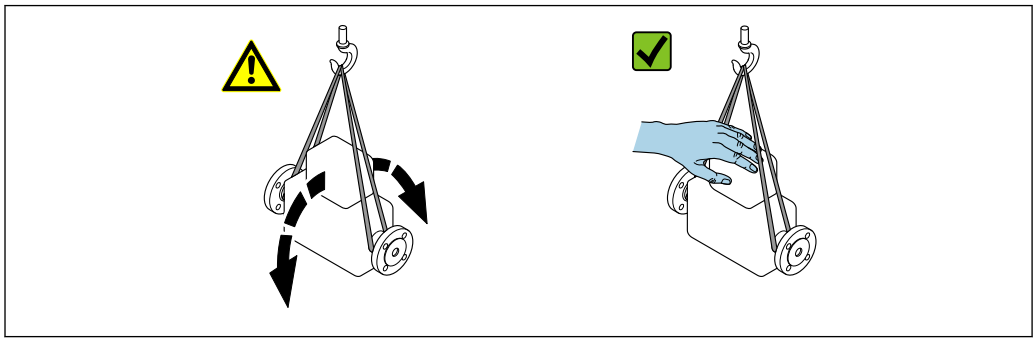

A0029214

5.2.2 Measuring devices with lifting lugs

⚠ CAUTION

Special transportation instructions for devices with lifting lugs

- ▶ Only use the lifting lugs fitted on the device or flanges to transport the device.
- ▶ The device must always be secured at two lifting lugs at least.

5.2.3 Transporting with a fork lift

If transporting in wood crates, the floor structure enables the crates to be lifted lengthwise or at both sides using a forklift.

⚠ CAUTION

Risk of damaging the magnetic coil!

- ▶ If transporting by forklift, do not lift the sensor by the metal casing.
- ▶ This would buckle the casing and damage the internal magnetic coils.

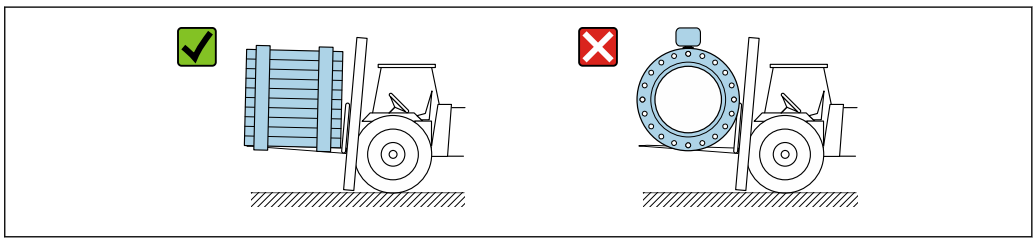

A0029319

5.3 Packaging disposal

All packaging materials are environmentally friendly and 100% recyclable:

- Outer packaging of device
  Stretch wrap made of polymer in accordance with EU Directive 2002/95/EC (RoHS)
- Packaging
  - Wood crate treated in accordance with ISPM 15 standard, confirmed by IPPC logo
  - Cardboard box in accordance with European packaging guideline 94/62/EC, recyclability confirmed by Resy symbol
- Transport material and fastening fixtures
  - Disposable plastic pallet
  - Plastic straps
  - Plastic adhesive strips
- Filler material
  Paper pads

6 Installation

6.1 Installation requirements

6.1.1 Installation position

Installation location

- Do not install the device at the highest point of the pipe.
- Do not install the device upstream from a free pipe outlet in a down pipe.

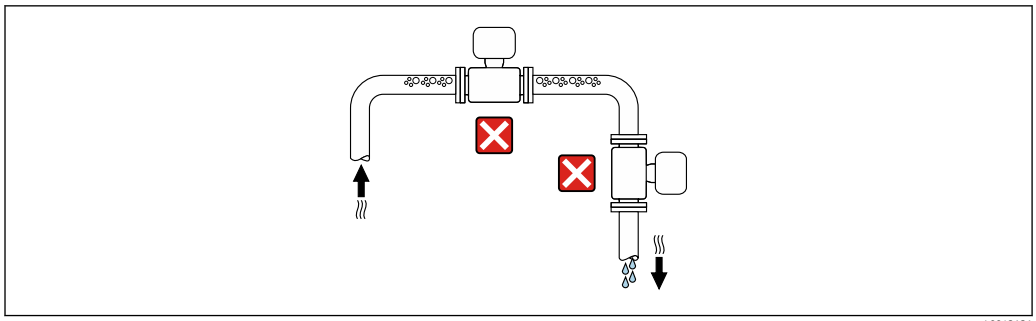

A0042131

The device should ideally be installed in an ascending pipe.

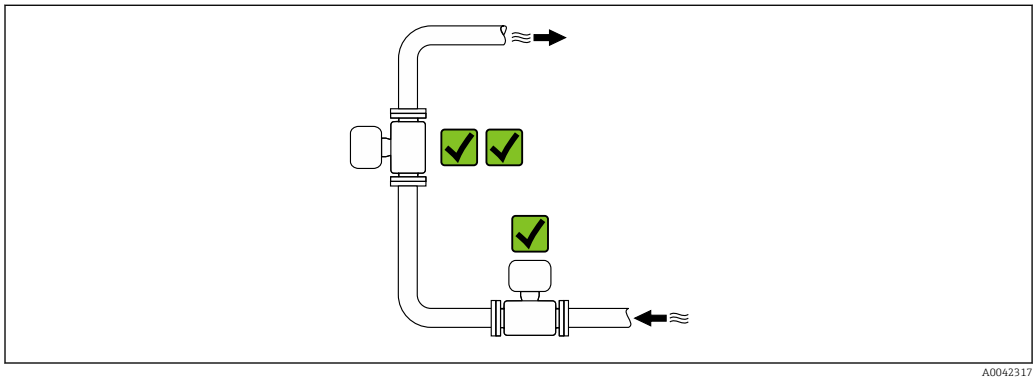

A0042317

Installation upstream from a down pipe

NOTICE

A vacuum in the measuring tube can damage the liner!

- If installing upstream of down pipes whose length h ≥ 5 m (16.4 ft): install a siphon with a vent valve downstream of the device.

This arrangement prevents the flow of liquid stopping in the pipe and the formation of air pockets.

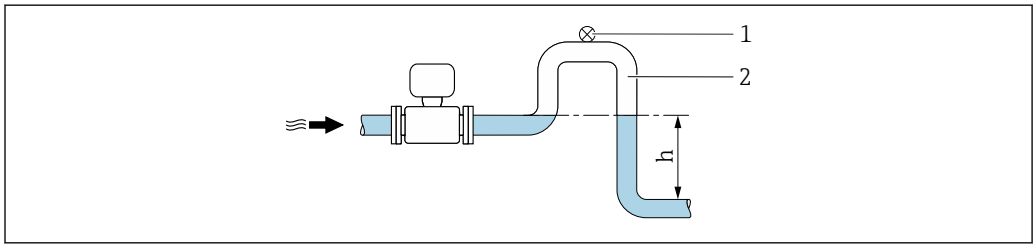

A0028981

1 *Vent valve*
2 *Pipe siphon*
h *Length of down pipe*

Installation with partially filled pipes

- Partially filled pipes with a gradient require a drain-type configuration.
- The installation of a cleaning valve is recommended.

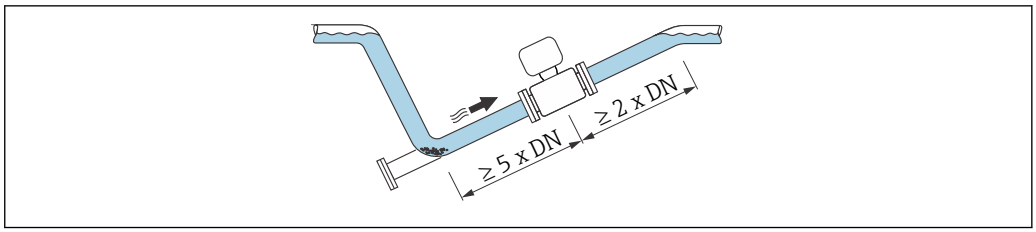

A0041088

Installation near pumps

NOTICE

A vacuum in the measuring tube can damage the liner!

- ▶ In order to maintain the static pressure, install the device in the flow direction downstream from the pump.
- ▶ Install pulsation dampers if reciprocating, diaphragm or peristaltic pumps are used.

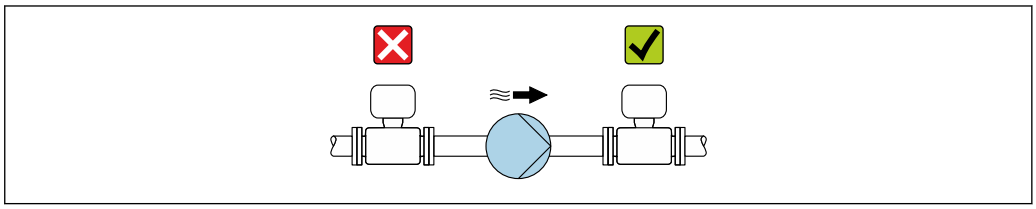

A0041083

- Information on the liner's resistance to partial vacuum
- Information on the measuring system's resistance to vibration and shock → 191

Installation in event of pipe vibrations

NOTICE

Pipe vibrations can damage the device!

- ▶ Do not expose the device to strong vibrations.
- ▶ Support the pipe and fix it in place.
- ▶ Support the device and fix it in place.

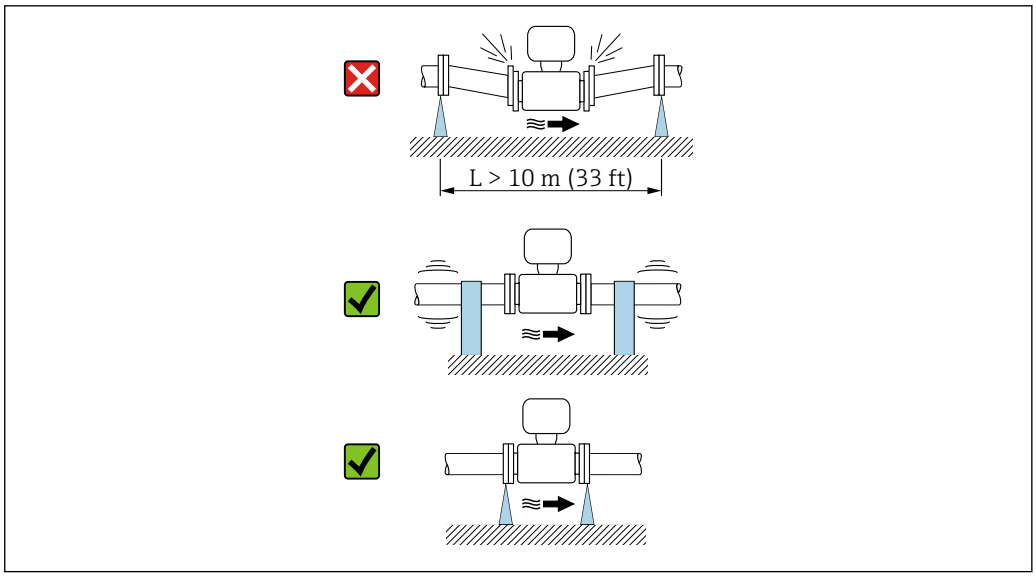

A0041092

Information on the measuring system's resistance to vibration and shock → 191

Orientation

The direction of the arrow on the nameplate helps you to install the measuring instrument according to the flow direction (direction of medium flow through the piping).

Orientation		Recommendation
Vertical orientation	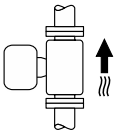 A0015591	✓✓
Horizontal orientation	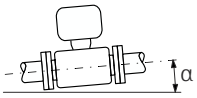 A0041328	✓ 1)
Horizontal orientation, transmitter at bottom	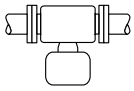 A0015590	✓✓ 2) 3) ✗ 4)
Horizontal orientation, transmitter at side	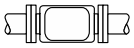 A0015592	✗

1) The measuring instrument should be self-draining for hygiene applications. A vertical orientation is recommended for this. If only a horizontal orientation is possible, an angle of inclination α ≥ 10° is recommended.
2) Applications with high process temperatures may increase the ambient temperature. To maintain the maximum ambient temperature for the transmitter, this orientation is recommended.
3) To prevent the electronics module from overheating in the case of a sharp rise in temperature (e.g. CIP or SIP processes), install the measuring instrument with the transmitter component pointing downwards.
4) With the empty pipe detection function switched on: empty pipe detection only works if the transmitter housing is pointing upwards.

Vertical

Optimum for self-emptying pipe systems and for use in conjunction with empty pipe detection.

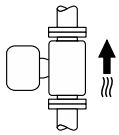

A0015591

Horizontal

- Ideally, the measuring electrode plane should be horizontal. This prevents brief insulation of the measuring electrodes by entrained air bubbles.
- Empty pipe detection only works if the transmitter housing is pointing upwards as otherwise there is no guarantee that the empty pipe detection function will actually respond to a partially filled or empty measuring tube.

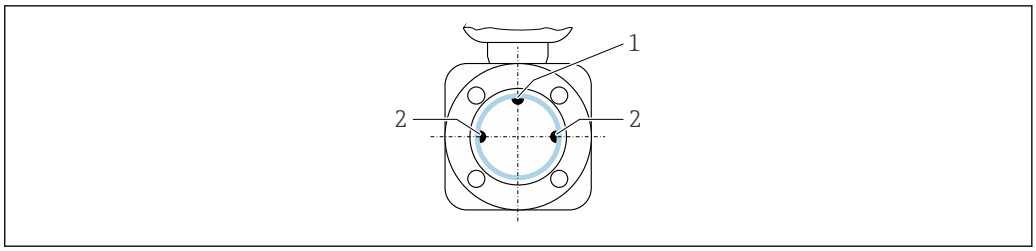

A0028998

1 *EPD electrode for empty pipe detection, available from ≥ DN 15 (½")*
2 *Measuring electrodes for signal detection*

Measuring instruments with a nominal diameter < DN 15 (½") do not have an EPD electrode. In this case, empty pipe detection is performed via the measuring electrodes.

Inlet and outlet runs

Installation with inlet and outlet runs

Installation is carried out with inlet and outlet runs.

Maintain straight, unimpeded inlet and outlet runs.

To avoid a vacuum and to maintain the specified level of measurement accuracy, if possible install the device upstream from assemblies that produce turbulence (e.g. valves, T-sections) and downstream from pumps.

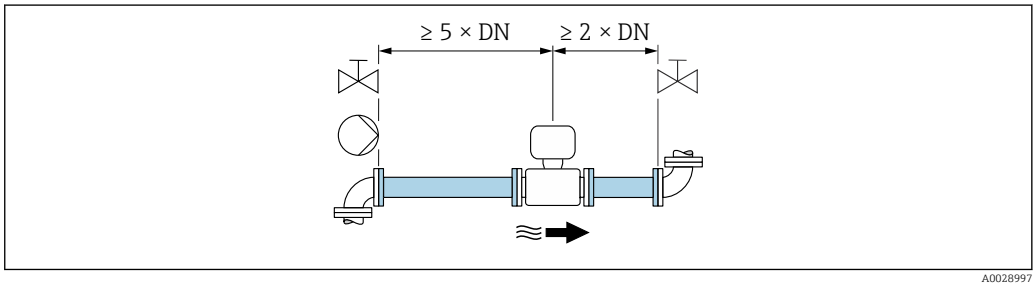

A0028997

Keep a sufficient distance to the next pipe elbow.

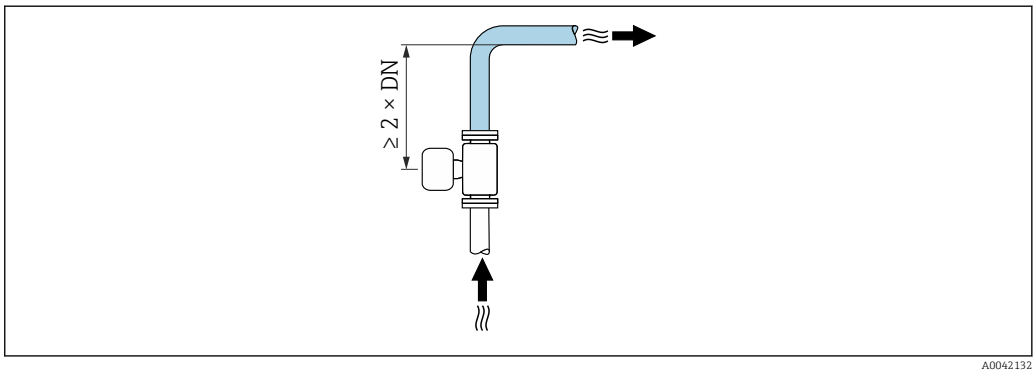

A0042132

Installation without inlet and outlet runs

Depending on the device design and installation location, the inlet and outlet runs can be reduced or omitted entirely.

Maximum measurement error
When the device is installed with the inlet and outlet runs described, a maximum measurement error of ±0.5 % of measured value ±1 mm/s (0.04 in/s) can be ensured.

Devices and possible order options

Order code for "Electrodes"		
Option	**Description**	**Design**
J	1.4435/316L, pointed for 0 x DN inlet/outlet runs	0 x DN full-bore design [1]
L	1.4435/316L for 0 x DN inlet/outlet runs	
M	Alloy C22 for 0 x DN inlet/outlet runs	
N	Tantalum for 0 x DN inlet/outlet runs	

1) "Full-bore" indicates a measuring tube cross-section corresponding to the nominal diameter without constriction. This means there is no pressure loss.

Installation before or after bends

Installation without inlet and outlet runs is possible.

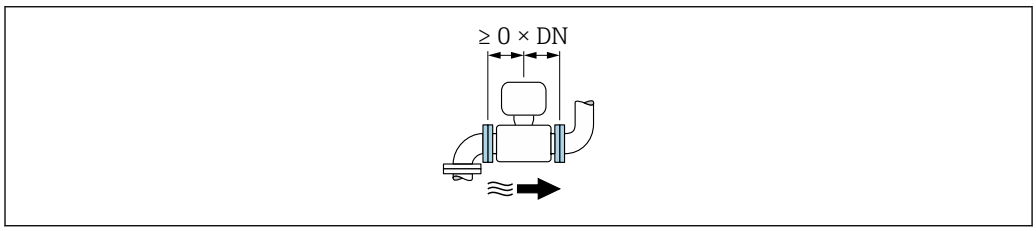

A0032859

Installation downstream of pumps

Installation without inlet and outlet runs is possible.

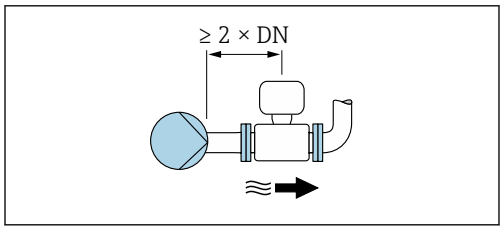

A0045530

An inlet run of ≥ 2 x DN is recommended.

Installation upstream of valves

Installation without inlet and outlet runs is possible.

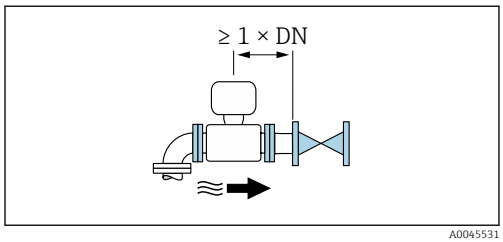

A0045531

An outlet run of ≥ 1 x DN is recommended.

Installation downstream of valves

The device can be installed without inlet and outlet runs if the valve is 100% open during operation.

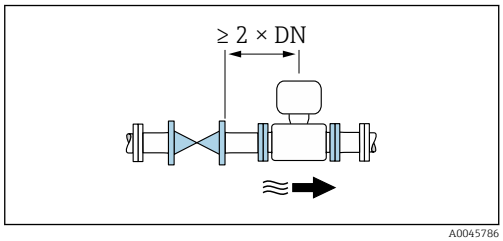

An inlet run of ≥ 2 x DN is recommended if the valve is 100% open during operation.

Installation dimensions

For the dimensions and installed lengths of the device, see the "Technical Information" document, "Mechanical construction" section

6.1.2 Environmental and process requirements

Ambient temperature range

Transmitter	Standard: −40 to +60 °C (−40 to +140 °F)
Local display	−20 to +60 °C (−4 to +140 °F), the readability of the display may be impaired at temperatures outside the temperature range.
Sensor	−40 to +60 °C (−40 to +140 °F)
Liner	Do not exceed or fall below the permitted temperature range of the liner .

If operating outdoors:
- Install the measuring device in a shady location.
- Avoid direct sunlight, particularly in warm climatic regions.
- Avoid direct exposure to weather conditions.

System pressure

Installation near pumps → 📄 21

Vibrations

Installation in event of pipe vibrations → 📄 21

Adapters

The sensor can also be installed in larger-diameter pipes with the aid of suitable adapters according to DIN EN 545 (double-flange reducers). The resultant increase in the rate of flow improves measurement accuracy with very slow-moving fluids. The nomogram shown here can be used to calculate the pressure loss caused by reducers and expanders.

- The nomogram only applies to liquids with a viscosity similar to that of water.
- If the medium has a high viscosity, a larger measuring tube diameter can be considered in order to reduce pressure loss.

1. Calculate the ratio of the diameters d/D.
2. From the nomogram read off the pressure loss as a function of flow velocity (downstream from the reduction) and the d/D ratio.

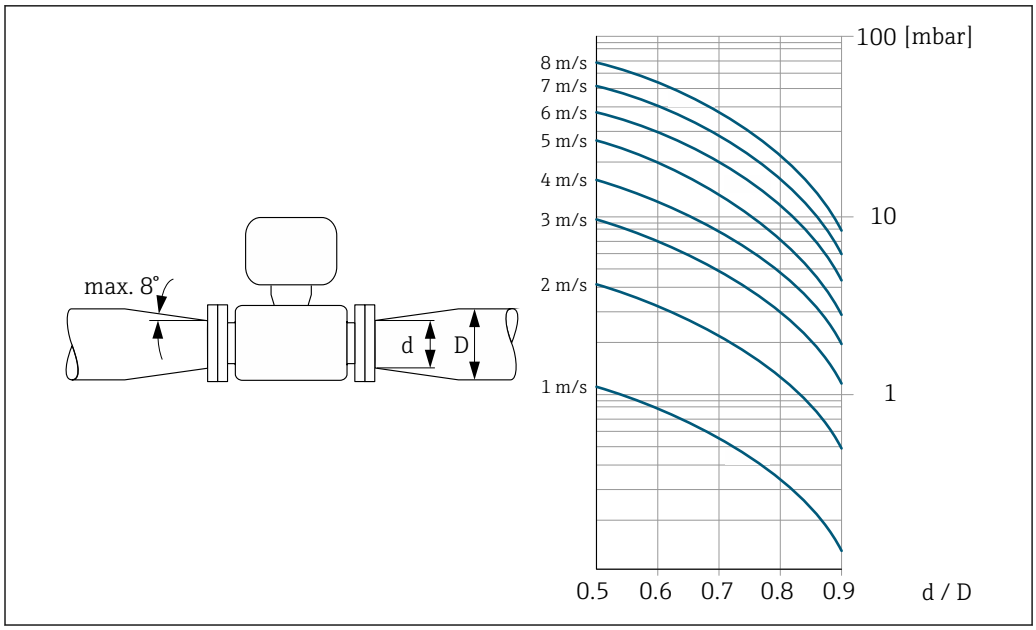

6.1.3 Special installation instructions

Protective cover

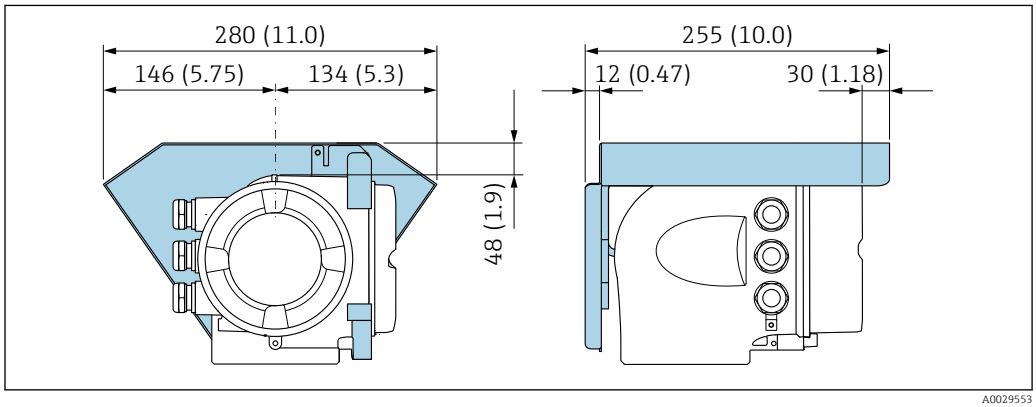

4 *Unit mm (in)*

Hygienic compatibility

- When installing in hygienic applications, please refer to the information in the "Certificates and approvals/hygienic compatibility" section → 202
- In the case of measuring devices with the order code for "Housing", option B "Stainless, hygienic", to seal the connection compartment cover, screw it closed finger-tight and tighten it by another 45° (corresponds to 15 Nm).

6.2 Installing the device

6.2.1 Required tools

For sensor

For flanges and other process connections: Use a suitable mounting tool.

6.2.2 Preparing the measuring device

1. Remove all remaining transport packaging.
2. Remove any protective covers or protective caps present from the sensor.
3. Remove stick-on label on the electronics compartment cover.

6.2.3 Turning the transmitter housing

To provide easier access to the connection compartment or display module, the transmitter housing can be turned.

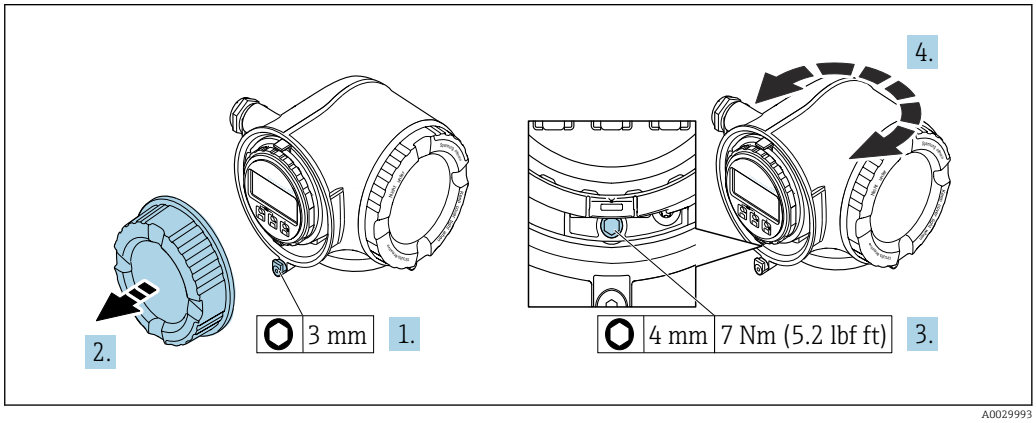

5 *Housing in non-Ex version*

1. Depending on the device version: Loosen the securing clamp of the connection compartment cover.
2. Unscrew the connection compartment cover.
3. Loosen the fixing screw.
4. Turn the housing to the desired position.
5. Tighten the securing screw.
6. Screw on the connection compartment cover.
7. Depending on the device version: Attach the securing clamp of the connection compartment cover.

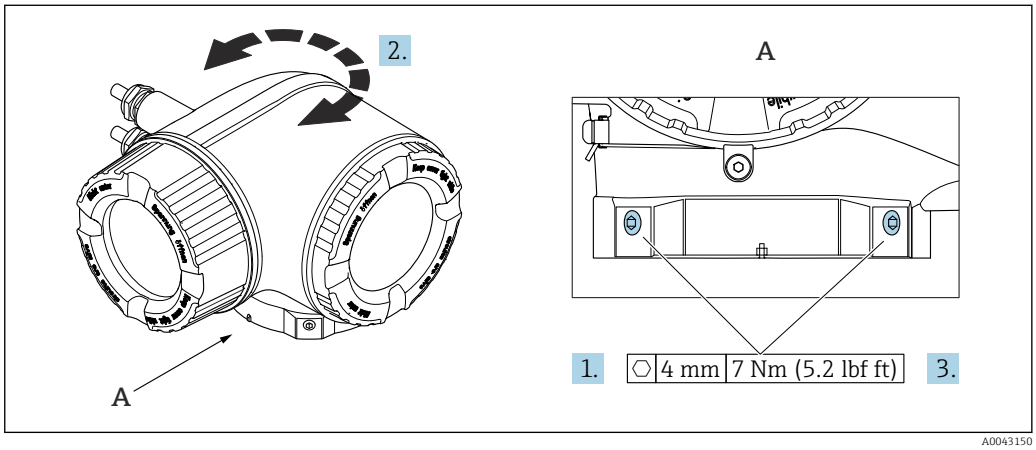

6 *Ex housing*

1. Loosen the fixing screws.
2. Turn the housing to the desired position.
3. Tighten the securing screws.

6.2.4 Turning the display module

The display module can be turned to optimize display readability and operability.

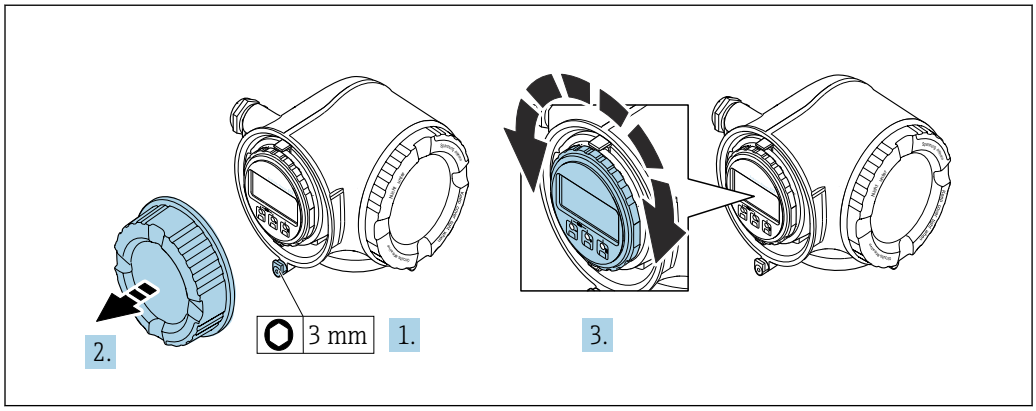

A0030035

1. Depending on the device version: Loosen the securing clamp of the connection compartment cover.
2. Unscrew the connection compartment cover.
3. Turn the display module to the desired position: max. 8 × 45° in each direction.
4. Screw on the connection compartment cover.
5. Depending on the device version: Attach the securing clamp of the connection compartment cover.

6.3 Post-installation check

Is the device undamaged (visual inspection)?	❑
Does the measuring instrument correspond to the measuring point specifications? For example: ▪ Process temperature ▪ Process pressure (refer to the section on "Pressure-temperature ratings" in the "Technical Information" document. ▪ Ambient temperature ▪ Measuring range	❑
Has the correct orientation been selected for the sensor → 🗎 22 ? ▪ According to sensor type ▪ As per medium temperature ▪ As per medium properties (outgassing, with entrained solids)	❑
Does the arrow on the sensor match the direction of flow of the medium→ 🗎 22?	❑
Is the tag name and labeling correct (visual inspection)?	❑
Are the fixing screws tightened securely?	❑
Was cleaning carried out in accordance with the specified cleaning specifications before initial commissioning? → 🗎 172?	❑

7 Electrical connection

⚠ WARNING

Live parts! Incorrect work performed on the electrical connections can result in an electric shock.

- ▶ Set up a disconnecting device (switch or power-circuit breaker) to easily disconnect the device from the supply voltage.
- ▶ In addition to the device fuse, include an overcurrent protection unit with max. 10 A in the plant installation.

7.1 Electrical safety

In accordance with applicable national regulations.

7.2 Connecting requirements

7.2.1 Required tools

- For cable entries: Use corresponding tools
- For securing clamp: Allen key 3 mm
- Wire stripper
- When using stranded cables: Crimper for wire end ferrule
- For removing cables from terminal: Flat blade screwdriver ≤ 3 mm (0.12 in)

7.2.2 Requirements for connection cable

The connecting cables provided by the customer must fulfill the following requirements.

Protective grounding cable for the outer ground terminal

Conductor cross-section < 6 mm^2 (10 AWG)

Larger cross-sections can be connected using a cable lug.

The grounding impedance must be less than 2 Ω.

Permitted temperature range

- The installation guidelines that apply in the country of installation must be observed.
- The cables must be suitable for the minimum and maximum temperatures to be expected.

Power supply cable (incl. conductor for the inner ground terminal)

Standard installation cable is sufficient.

Signal cable

4 to 20 mA current input

Standard installation cable is sufficient.

Pulse/frequency/switch output

Standard installation cable is sufficient.

Relay output

Standard installation cable is sufficient.

Status input

Standard installation cable is sufficient.

Ethernet-APL

Shielded twisted-pair cable. Cable type A is recommended.

See https://www.profibus.com Ethernet-APL White Paper "

Cable diameter

- Cable glands supplied:
  M20 × 1.5 with cable Ø 6 to 12 mm (0.24 to 0.47 in)
- Spring-loaded terminals: Suitable for strands and strands with ferrules.
  Conductor cross-section 0.2 to 2.5 mm^2 (24 to 12 AWG)

Requirements for connecting cable – remote display and operating module DKX001

Optionally available connecting cable

A cable is supplied depending on the order option
- Order code for measuring device: order code **030** for "Display; operation", option **O**
  or
- Order code for measuring device: order code **030** for "Display; operation", option **M**
  and
- Order code for DKX001: order code **040** for "Cable", option **A, B, D, E**

Standard cable	2 × 2 × 0.34 mm^2 (22 AWG) PVC cable with common shield (2 pairs, pair-stranded)
Flame resistance	According to DIN EN 60332-1-2
Oil resistance	According to DIN EN 60811-2-1
Shield	Tin-plated copper braid, optical cover ≥ 85 %
Capacitance: core/shield	≤ 200 pF/m
L/R	≤ 24 µH/Ω
Available cable length	5 m (15 ft)/10 m (35 ft)/20 m (65 ft)/30 m (100 ft)
Continuous operating temperature	When mounted in a fixed position: −50 to +105 °C (−58 to +221 °F); when cable can move freely: −25 to +105 °C (−13 to +221 °F)

Standard cable - customer-specific cable

No cable is supplied with the device and must be provided by the customer:
Order code for DKX001: Order code **040** for "Cable", option **1** "None, provided by customer, max. 300 m"

A standard cable with the following minimum requirements can be used as the connecting cable, even in the hazardous area (Zone 2, Class I, Division 2 and Zone 1, Class I, Division 1):

Standard cable	4 wires (2 pairs); pair-stranded with common shield, minimum wire cross-section 0.34 mm^2 (22 AWG)
Shield	Tin-plated copper braid, optical cover ≥ 85 %
Cable impedance (pair)	Minimum 80 Ω
Cable length	Maximum 300 m (1 000 ft), maximum loop impedance 20 Ω
Capacitance: core/shield	Maximum 1 000 nF for Zone 1, Class I, Division 1
L/R	Maximum 24 µH/Ω for Zone 1, Class I, Division 1

7.2.3 Terminal assignment

Transmitter: supply voltage, input/outputs

The terminal assignment of the inputs and outputs depends on the individual order version of the device. The device-specific terminal assignment is documented on an adhesive label in the terminal cover.

Supply voltage		Input/output 1 (Port 1)		Input/output 2		Input/output 3		Service interface (Port 2 [1])
1 (+)	2 (–)	26 (+)	27 (-)	24 (+)	25 (–)	22 (+)	23 (–)	CDI-RJ45
				Device-specific terminal assignment: adhesive label in terminal cover.				

1) No PROFINET communication available on port 2

Terminal assignment of the remote display and operating module → 36.

For information on the pin assignment of the device plugs, see the Operating Instructions for the device.

7.2.4 Available device plugs for Proline 300

Device plugs may not be used in hazardous areas!

Order code for "Input; output 1", option RB "PROFINET over Ethernet-APL"

Order code for "Electrical connection"	Cable entry/connection	
	2	3
L, N, P, U	Connector M12×1	–

7.2.5 Pin assignment of device plug

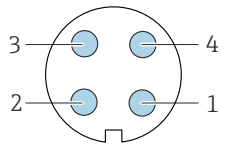

Pin	Assignment	Coding	Plug/socket
1	Ethernet-APL signal -	A	Socket
2	Ethernet-APL signal +		
3	Cable shield[1]		
4	Not used		
Metal plug housing	Cable shield		
[1]If a cable shield is used			

7.2.6 Preparing the device

NOTICE

Insufficient sealing of the housing!

Operational reliability of the measuring device could be compromised.

- Use suitable cable glands corresponding to the degree of protection.

1. Remove dummy plug if present.
2. If the measuring instrument is supplied without cable glands:
   Provide suitable cable gland for corresponding connecting cable.

3. If the measuring instrument is supplied with cable glands:
   Observe requirements for connecting cables .

7.3 Connecting the device

NOTICE

An incorrect connection compromises electrical safety!

- Only properly trained specialist staff may perform electrical connection work.
- Observe applicable federal/national installation codes and regulations.
- Comply with local workplace safety regulations.
- Always connect the protective ground cable ⏚ before connecting additional cables.
- When using in potentially explosive atmospheres, observe the information in the device-specific Ex documentation.

7.3.1 Connecting the transmitter

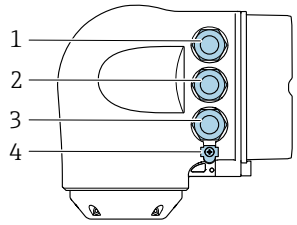

A0026781

1 *Terminal connection for supply voltage*
2 *Terminal connection for signal transmission, input/output*
3 *Terminal connection for signal transmission, input/output or terminal connection for network connection via service interface (CDI-RJ45); optional: connection for external WLAN antenna or remote display and operating module DKX001*
4 *Protective earth (PE)*

In addition to connecting the device via PROFINET over Ethernet-APL and the available inputs/outputs, an additional connection option is also available: Integrate into a network via the service interface (CDI-RJ45) → 35.

Connecting connector

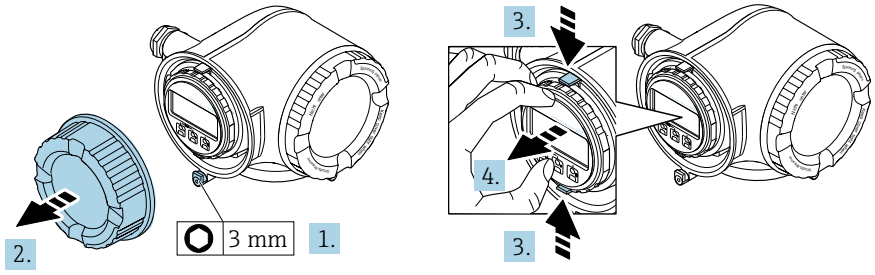

A0029813

1. Loosen the securing clamp of the connection compartment cover.
2. Unscrew the connection compartment cover.
3. Squeeze the tabs of the display module holder together.
4. Remove the display module holder.

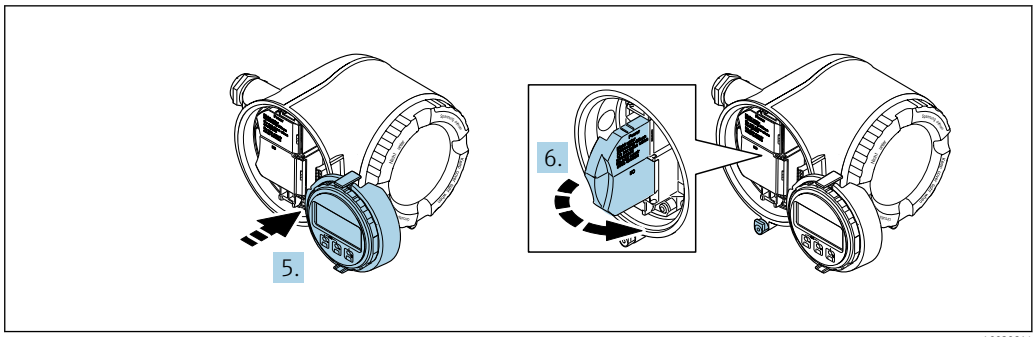

A0029814

5. Attach the holder to the edge of the electronics compartment.
6. Open the terminal cover.

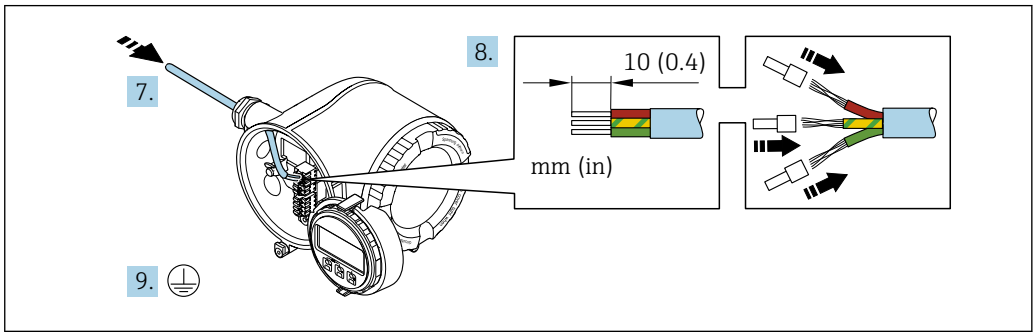

A0051111

7. Push the cable through the cable entry. To ensure tight sealing, do not remove the sealing ring from the cable entry.
8. Strip the cable and cable ends and connect to terminals 26-27. In the case of stranded cables, also fit ferrules.
9. Connect protective earth (PE).
10. Firmly tighten the cable glands.
    ↳ This concludes the connection via the APL port.

Connecting the supply voltage and additional inputs/outputs

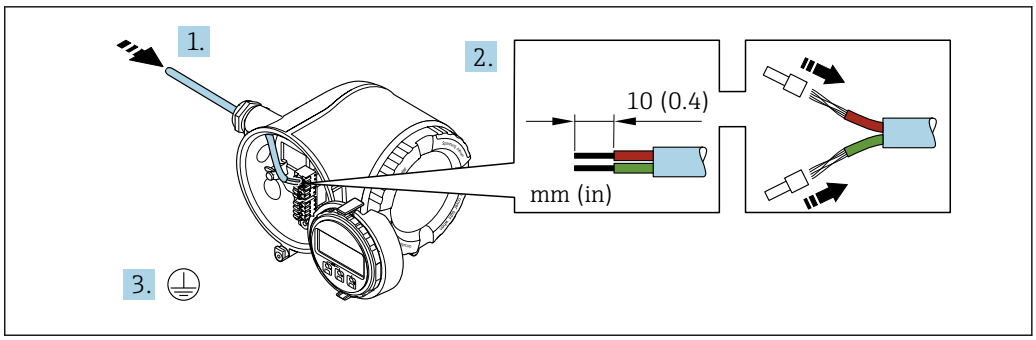

A0051128

1. Push the cable through the cable entry. To ensure tight sealing, do not remove the sealing ring from the cable entry.
2. Strip the cable and cable ends. In the case of stranded cables, also fit ferrules.
3. Connect the protective ground.

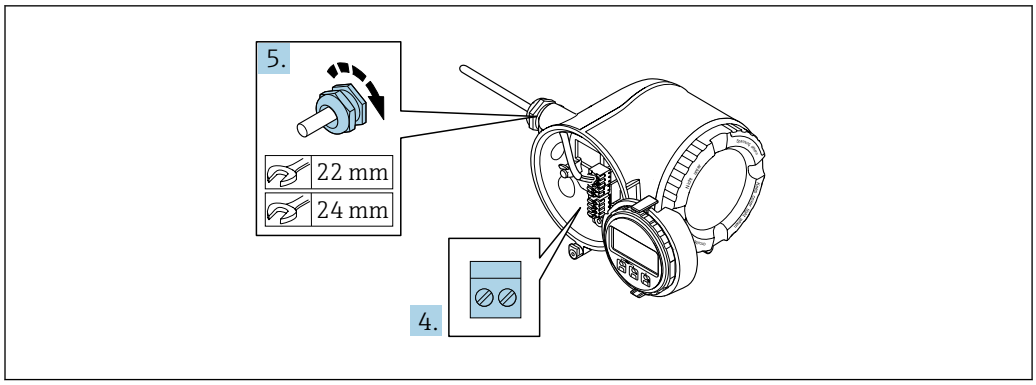

A0033984

4. Connect the cable according to the terminal assignment.
   ↳ **Signal cable terminal assignment:** The device-specific terminal assignment is documented on an adhesive label in the terminal cover.
   Supply voltage terminal assignment: Adhesive label in the terminal cover or → 31.
5. Firmly tighten the cable glands.
   ↳ This concludes the cable connection process.
6. Close the terminal cover.
7. Fit the display module holder in the electronics compartment.
8. Screw on the connection compartment cover.
9. Secure the securing clamp of the connection compartment cover.

Removing a cable

To remove a cable from the terminal:

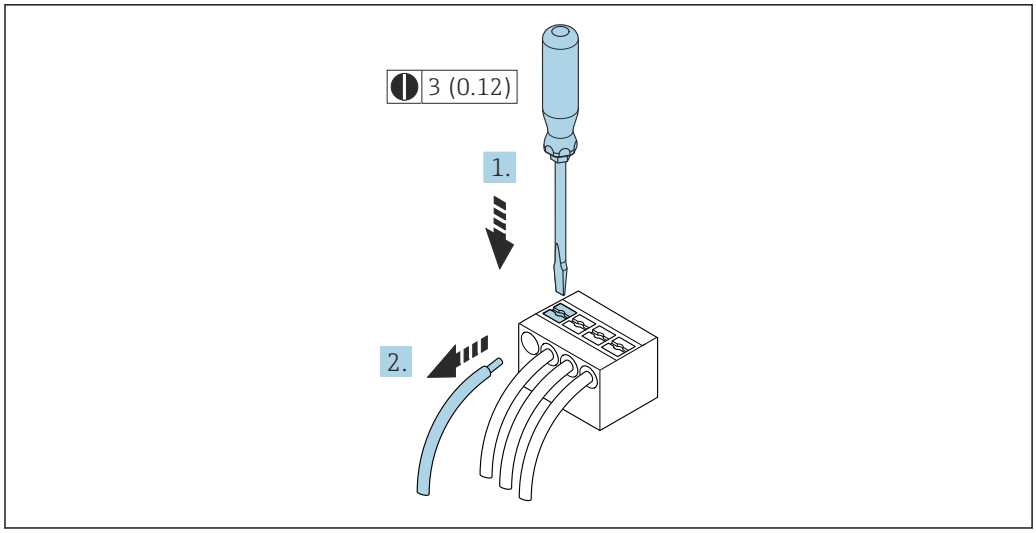

A0029598

7 *Unit mm(in)*

1. Use a flat-blade screwdriver to press down on the slot between the two terminal holes.
2. Remove the cable end from the terminal.

7.3.2 Integrating the transmitter into a network

This section only presents the basic options for integrating the device into a network.

For information on the procedure to follow to connect the transmitter correctly → 32.

Integrating via the service interface

The device is integrated via the connection to the service interface (CDI-RJ45).

Note the following when connecting:
- Recommended cable: CAT 5e, CAT 6 or CAT 7, with shielded connector (e.g. manufacturer YAMAICHI ; Part No Y-ConProfixPlug63 / Prod. ID: 82-006660)
- Maximum cable thickness: 6 mm
- Length of plug including anti-bend protection: 42 mm
- Bending radius: 5 x cable thickness

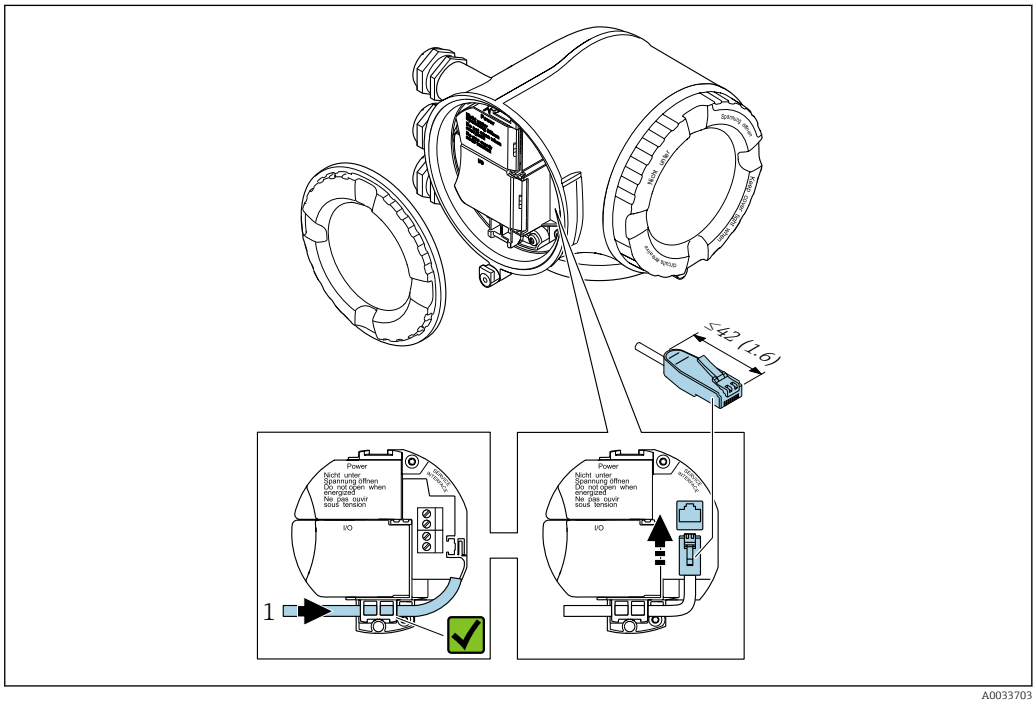

A0033703

1 Service interface (CDI-RJ45)

An adapter for the RJ45 to the M12 plug is optionally available:
Order code for "Accessories", option **NB**: "Adapter RJ45 M12 (service interface)"

The adapter connects the service interface (CDI-RJ45) to an M12 plug mounted in the cable entry. The connection to the service interface can thus be established via an M12 plug without opening the device.

7.3.3 Connecting the remote display and operating module DKX001

The remote display and operating module DKX001 is available as an optional extra → 175..

- The remote display and operating module DKX001 is only available for the following housing version: order code for "Housing": option A "Aluminum, coated"
- The measuring instrument is always supplied with a dummy cover when the remote display and operating module DKX001 is ordered directly with the measuring instrument. Display or operation at the transmitter is not possible in this case.
- If ordered subsequently, the remote display and operating module DKX001 may not be connected at the same time as the existing measuring instrument display module. Only one display or operation unit may be connected to the transmitter at any one time.

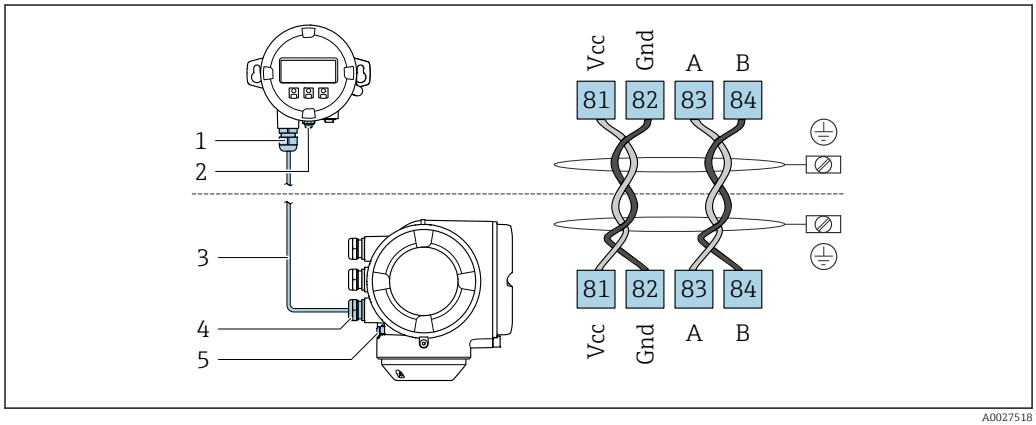

1 *Remote display and operating module DKX001*
2 *Protective ground connection (PE)*
3 *Connecting cable*
4 *Measuring instrument*
5 *Protective ground connection (PE)*

7.4 Ensuring potential equalization

7.4.1 Requirements

For potential equalization:
- Pay attention to in-house grounding concepts
- Take account of operating conditions like the pipe material and grounding
- Connect the medium, sensor and transmitter to the same electric potential
- Use a ground cable with a minimum cross-section of 6 mm^2 (10 AWG) and a cable lug for potential equalization connections

7.4.2 Connection example, standard scenario

Metal process connections

Potential equalization is generally via the metal process connections that are in contact with the medium and mounted directly on the sensor. Therefore there is generally no need for additional potential equalization measures.

7.4.3 Connection example in special situations

Plastic process connections

In the case of plastic process connections, additional grounding rings or process connections with an integrated grounding electrode must be used to ensure potential matching between the sensor and the fluid. If there is no potential matching, this can affect the measuring accuracy or cause the destruction of the sensor as a result of the electrochemical decomposition of the electrodes.

Note the following when using grounding rings:
- Depending on the option ordered, plastic disks are used instead of grounding rings on some process connections. These plastic disks only act as "spacers" and do not have any potential matching function. Furthermore, they also perform a significant sealing function at the sensor/connection interface. Therefore, in the case of process connections without metal grounding rings, these plastic disks/seals should never be removed and should always be installed!
- Grounding rings can be ordered separately as accessory DK5HR* from Endress+Hauser (does not contain any seals). When ordering make sure that the grounding rings are compatible with the material used for the electrodes, as otherwise there is the danger that the electrodes could be destroyed by electrochemical corrosion!
- If seals are required, they can be additionally ordered with seal set DK5G*.
- Grounding rings including seals are mounted inside the process connections. This does not affect the installed length.

Potential equalization via additional grounding ring

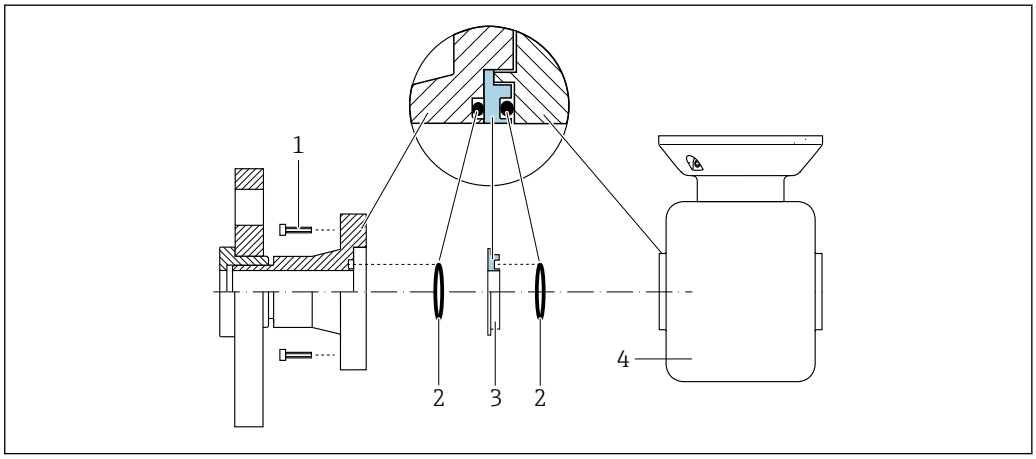

1 *Hexagonal-headed bolts of process connection*
2 *O-ring seals*
3 *Plastic disk (spacer) or grounding ring*
4 *Sensor*

Potential equalization via grounding electrodes on process connection

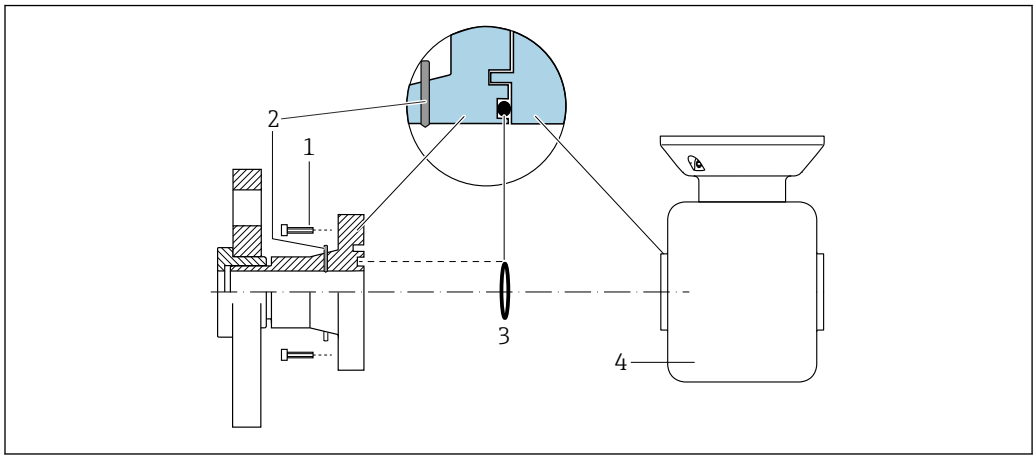

1 *Hexagonal-headed bolts of process connection*
2 *Integrated grounding electrodes*
3 *O-ring seal*
4 *Sensor*

7.5 Special connection instructions

7.5.1 Connection examples

Current output 4 to 20 mA (without HART)

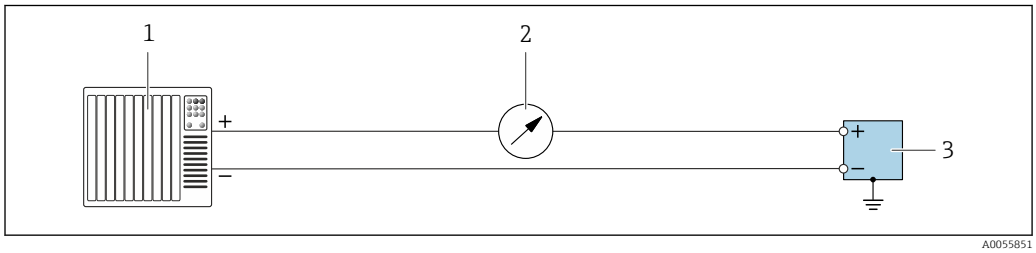

8 *Connection example for 4 to 20 mA current output (active)*

1 *Automation system with current input (e.g. PLC)*
2 *Optional additional display unit: Observe maximum load*
3 *Flowmeter with current output (active)*

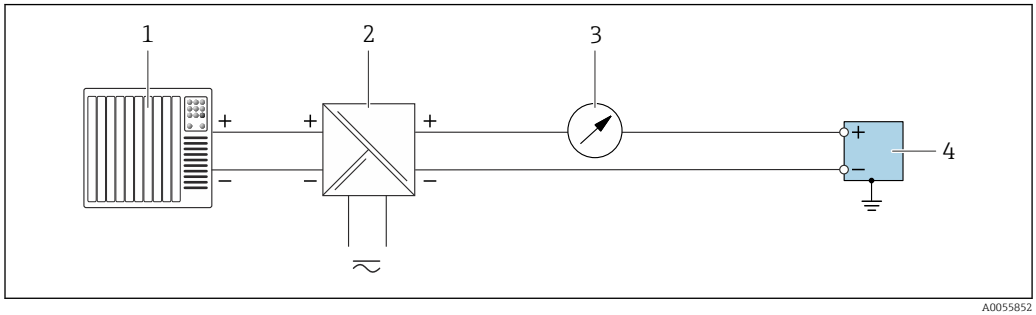

9 *Connection example for 4 to 20 mA current output (passive)*

1 *Automation system with current input (e.g. PLC)*
2 *Power supply*
3 *Optional additional display unit: Observe maximum load*
4 *Transmitter with current output (passive)*

Current input 4 to 20 mA

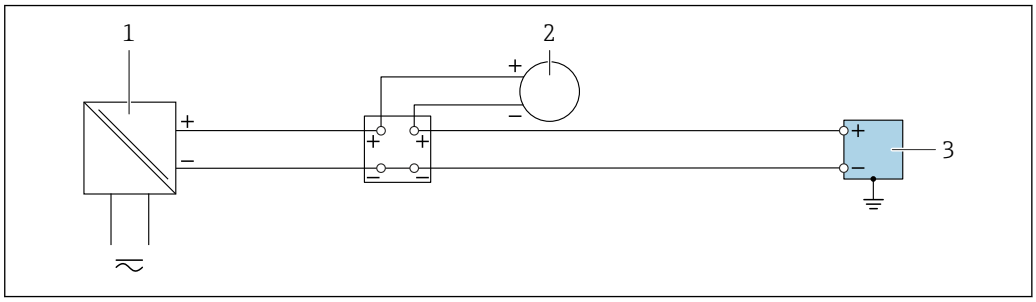

10 Connection example for 4 to 20 mA current input

1 *Power supply*
2 *External measuring instrument with 4 to 20 mA passive current output. e.g. pressure or temperature)*
3 *Transmitter with 4 to 20 mA current input*

Pulse output/frequency output/switch output

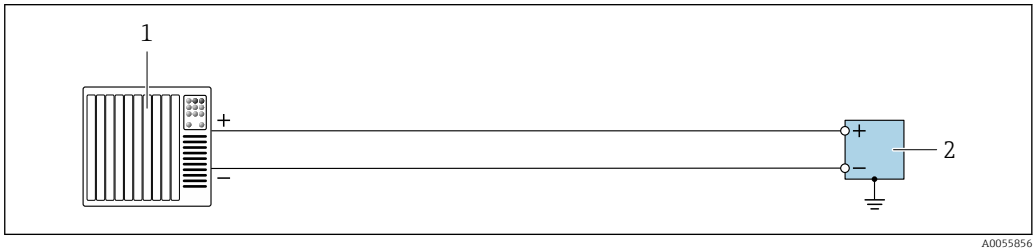

11 Connection example for pulse output/frequency output/switch output (active)

1 *Automation system with pulse input/frequency input/switch input (e.g. PLC)*
2 *Transmitter with pulse output/frequency output/switch output (active)*

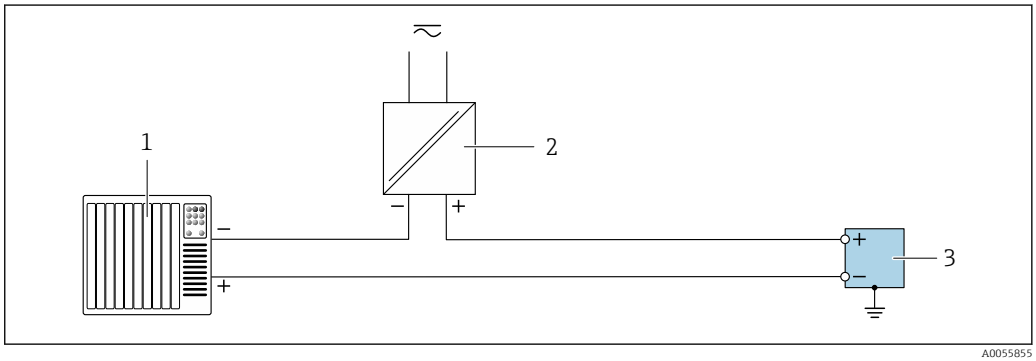

12 Connection example for pulse output/frequency output/switch output (passive)

1 *Automation system with pulse input/frequency input/switch input (e.g. PLC)*
2 *Power supply*
3 *Transmitter with pulse output/frequency output/switch output (passive)*

Relay output

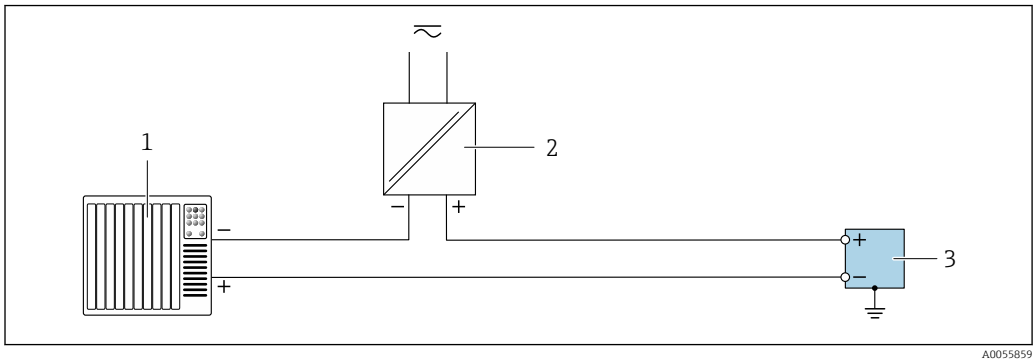

13 Connection example for relay output

1 Automation system with switch input (e.g. PLC)
2 Power supply
3 Transmitter with relay output

Status input

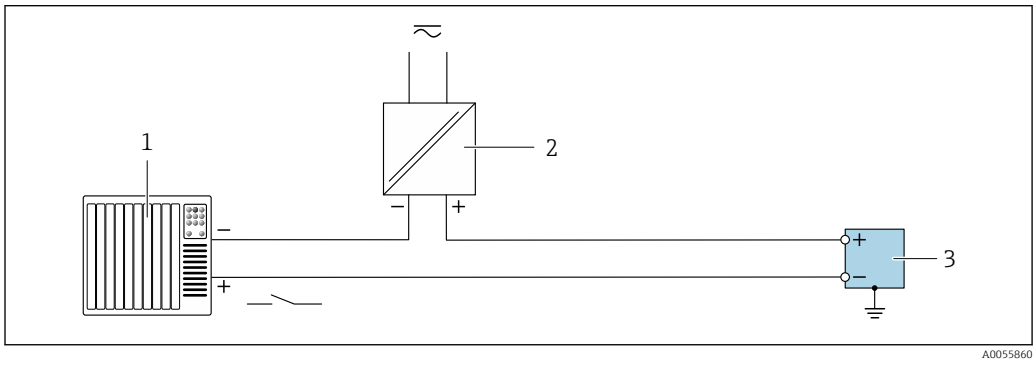

14 Connection example for status input

1 Automation system with switch output passive e.g. PLC)
2 Power supply
3 Transmitter with status input

Ethernet-APL

See https://www.profibus.com Ethernet-APL White Paper "

7.6 Hardware settings

7.6.1 Setting the device name

A measuring point can be quickly identified within a plant on the basis of the tag name. The factory-assigned device name can be changed using the DIP switches or the automation system.

Example: EH-Promag300-XXXX

EH	Endress+Hauser
Promag	Instrument family
300	Transmitter
XXXX	Serial number of the device

The device name currently used is displayed in Setup → Name of station .

Setting the device name using the DIP switches

The last part of the device name can be set using DIP switches 1-8. The address range is between 1 and 254 (factory setting: serial number of the device)

Overview of the DIP switches

DIP switch	Bit	Description
1	128	Configurable part of the device name
2	64	
3	32	
4	16	
5	8	
6	4	
7	2	
8	1	

Example: setting the device name EH-PROMAG300-065

DIP switch	ON/OFF	Bit	Device name
1	OFF	–	EH-PROMAG300-065
2	ON	64	
3...7	OFF	–	
8	ON	1	
Serial number of the device:		065	

Setting the device name

Risk of electric shock when opening the transmitter housing.
- ▶ Before opening the transmitter housing:
- ▶ Disconnect the device from the power supply.

The default IP address may **not** be activated → 📄 42.

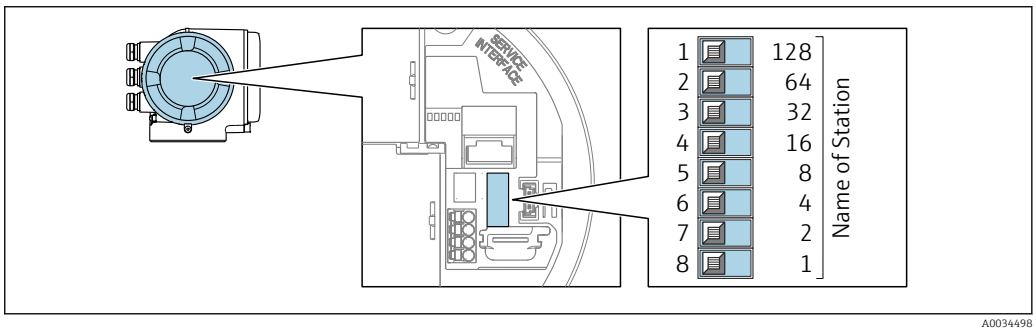

1. Depending on the housing version, loosen the securing clamp or fixing screw of the housing cover.
2. Depending on the housing version, unscrew or open the housing cover and disconnect the local display from the main electronics module where necessary .
3. Set the desired device name using the corresponding DIP switches on the I/O electronics module.

4. Reassemble the transmitter in the reverse order.
5. Reconnect the device to the power supply.
   ↳ The configured device address is used once the device is restarted.

Setting the device name via the automation system

DIP switches 1-8 must all be set to **OFF** (factory setting) or all be set to **ON** to be able to set the device name via the automation system.

The complete device name (name of station) can be changed individually via the automation system.

- The serial number used as part of the device name in the factory setting is not saved. It is not possible to reset the device name to the factory setting with the serial number. The device name is empty following the reset.
- When assigning the device name via the automation system: assign the device name in lower case letters.

7.6.2 Activating the default IP address

Activating the default IP address by DIP switch

Risk of electric shock when opening the transmitter housing.
- ▶ Before opening the transmitter housing:
- ▶ Disconnect the device from the power supply.

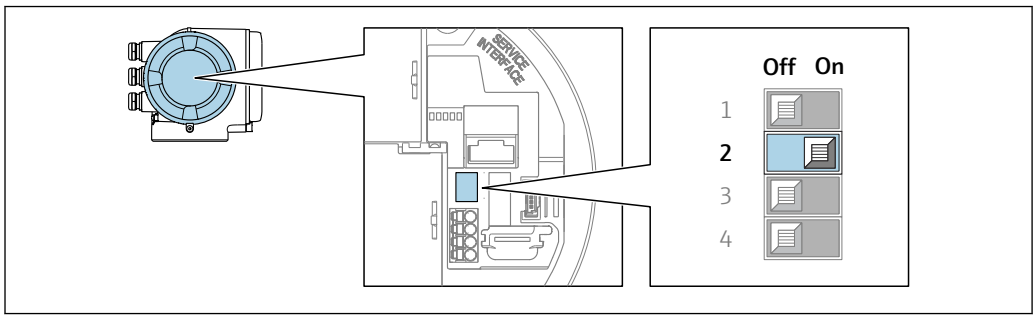

A0034499

1. Depending on the housing version, loosen the securing clamp or fixing screw of the housing cover.
2. Depending on the housing version, unscrew or open the housing cover and disconnect the local display from the main electronics module where necessary .
3. DIP switch no. 2 on the I/O electronics module from **OFF** → **ON**.
4. Reassemble the transmitter in the reverse order.
5. Reconnect the device to the power supply.
   ↳ The default IP address is used once the device is restarted.

7.7 Ensuring the degree of protection

The measuring instrument fulfills all the requirements for the degree of protection IP66/67, Type 4X enclosure.

To ensure degree of protection IP66/67, Type 4X enclosure, carry out the following steps after making the electrical connection:

1. Check that the housing seals are clean and fitted correctly.
2. Dry, clean or replace the seals if necessary.
3. Tighten all housing screws and screw covers.

4. Firmly tighten the cable glands.
5. To ensure that moisture does not enter the cable entry:
   Route the cable so that it loops down before the cable entry ("water trap").
   ↳

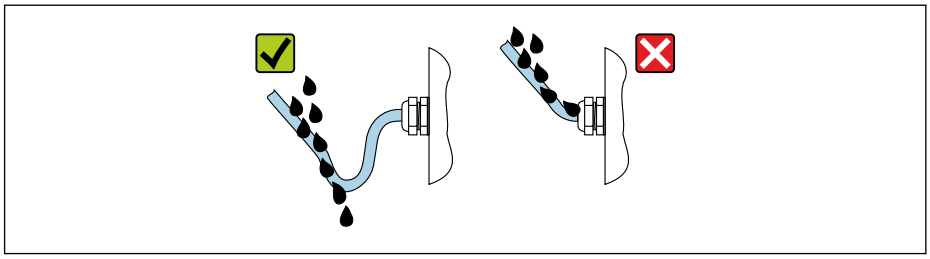

A0029278

6. The supplied cable glands and plastic dummy plugs used for the threaded cable entries do not ensure degree of protection IP66/67, Type 4X enclosure. To achieve this degree of protection, cable glands and plastic dummy plugs that are not used must be replaced by threaded dummy plugs with the degree of protection IP66/67, Type 4X enclosure.

7.8 Post-connection check

Are the device and cable undamaged (visual inspection)?	❑
Is the protective earthing established correctly?	❑
Do the cables used meet the requirements ?	❑
Are the mounted cables strain-relieved and fixed securely in place?	❑
Are all cable glands installed, securely tightened and leak-tight? Cable run with "water trap" → 🗎 42?	❑
Is the terminal assignment correct ?	❑
If supply voltage is present: Does anything appear on the display module screen?	❑
Is the potential equalization established correctly ?	❑
Are dummy plugs inserted in unused cable entries and have transportation plugs been replaced with dummy plugs?	❑

8 Operation options

8.1 Overview of operation options

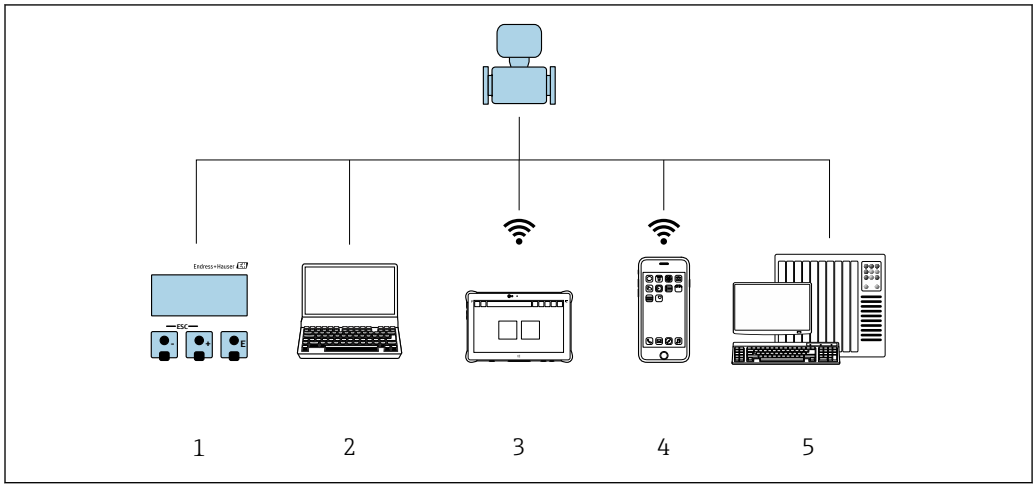

A0046226

1 *Local operation via display module*
2 *Computer with web browser or with operating tool (e.g FieldCare, DeviceCare, SIMATIC PDM)*
3 *Field Xpert SMT70*
4 *Mobile handheld terminal*
5 *Automation system (e.g. PLC)*

8.2 Structure and function of the operating menu

8.2.1 Structure of the operating menu

For an overview of the operating menu for experts: see the "Description of Device Parameters" document supplied with the device → 206

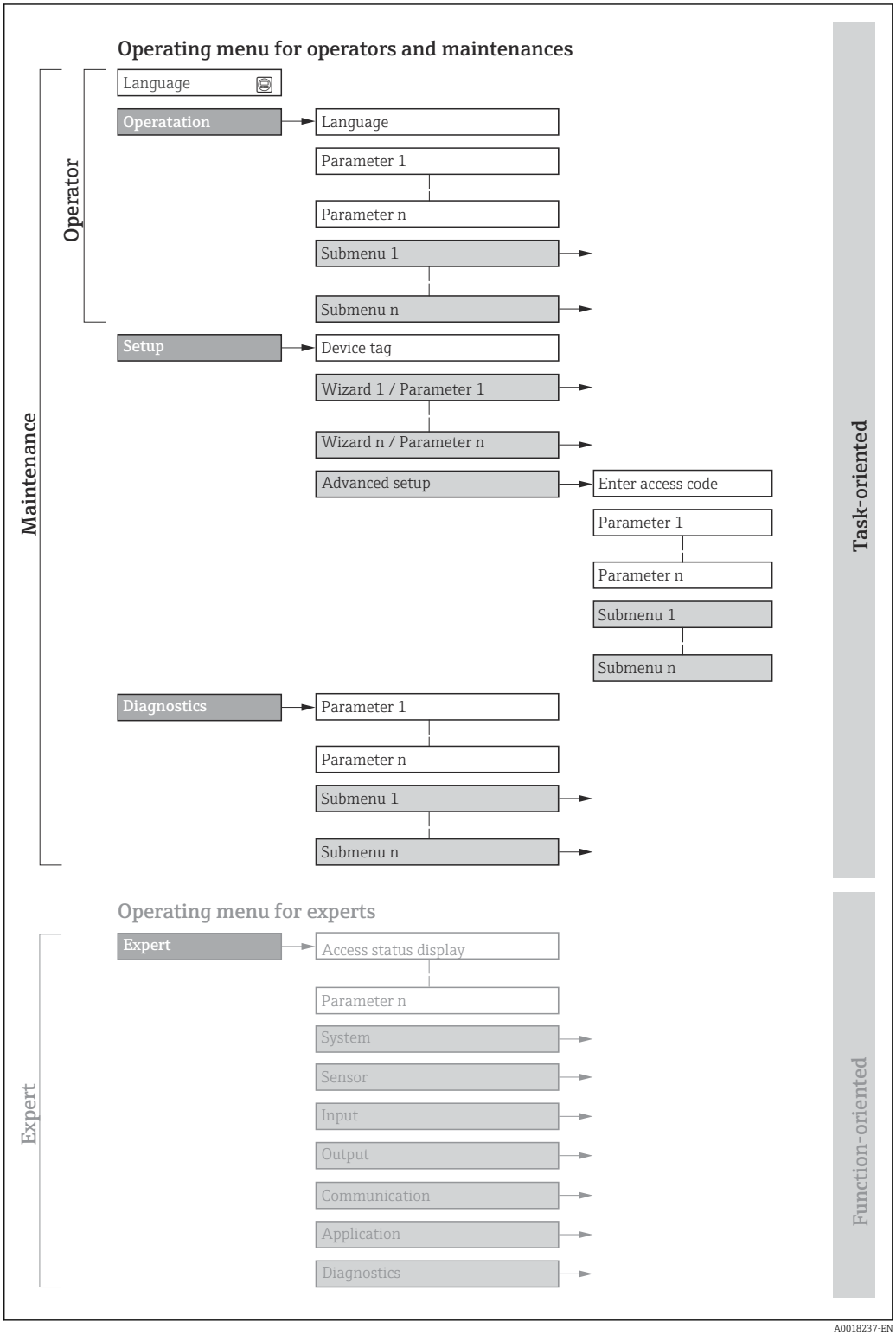

15 *Schematic structure of the operating menu*

8.2.2 Operating philosophy

The individual parts of the operating menu are assigned to certain user roles (e.g. operator, maintenance etc.). Each user role contains typical tasks within the device life cycle.

Menu/parameter		User role and tasks	Content/meaning
Language	Task-oriented	**Role "Operator", "Maintenance"** Tasks during operation: ▪ Configuring the operational display ▪ Reading measured values	Defining the operating language
Operation			▪ Defining the operating language ▪ Defining the web server operating language ▪ Resetting and controlling totalizers ▪ Configuring the operational display (e.g. display format, display contrast) ▪ Resetting and controlling totalizers
Setup		**"Maintenance" role** Commissioning: ▪ Configuring the measurement ▪ Configuring the inputs and outputs ▪ Configuring the communication interface	Wizard for quick commissioning: ▪ Configuring the system units ▪ Displaying the I/O configuration ▪ Configuring the inputs ▪ Configuring the outputs ▪ Configuring the operational display ▪ Configuring the low flow cut off ▪ Configuring empty pipe detection Advanced setup ▪ For more customized configuration of the measurement (adaptation to special measuring conditions) ▪ Calculated process variables ▪ Sensor adjustment ▪ Configuring totalizers ▪ Configuring the display ▪ Configuring electrode cleaning (optional) ▪ Configuring the WLAN settings ▪ Data backup ▪ Administration (define access code, reset measuring instrument)
Diagnostics		**"Maintenance" role** Troubleshooting: ▪ Diagnostics and elimination of process and device errors ▪ Measured value simulation	Contains all parameters for error detection and analyzing process and device errors: ▪ Diagnostic list Contains up to 5 currently pending diagnostic messages. ▪ Event logbook Contains event messages that have occurred. ▪ Device information Contains information for identifying the device. ▪ Measured values Contains all current measured values. ▪ **Data logging** submenu with the "Extended HistoROM" order option Storage and visualization of measured values ▪ Heartbeat Technology The functionality of the device is checked on demand and the verification results are documented. ▪ Simulation Used to simulate measured values or output values. ▪ Testpoints

Menu/parameter		User role and tasks	Content/meaning
Expert	Function-oriented	Tasks that require detailed knowledge of the function of the device: ▪ Commissioning measurements under difficult conditions ▪ Optimal adaptation of the measurement to difficult conditions ▪ Detailed configuration of the communication interface ▪ Error diagnostics in difficult cases	Contains all the parameters of the device and makes it possible to access these parameters directly using an access code. The structure of this menu is based on the function blocks of the device: ▪ System Contains all higher-level device parameters that do not affect measurement or measured value communication. ▪ Sensor Configuring the measurement. ▪ Input Configuring the status input. ▪ Output Configuring the analog current outputs as well as the pulse/frequency and switch output. ▪ Communication Configuring the digital communication interface and the web server. ▪ Application Configuring the functions that go beyond the actual measurement (e.g. totalizer). ▪ Diagnostics Error detection and analysis of process and device errors and for device simulation and the Heartbeat Technology menu.

8.3 Access to operating menu via local display

8.3.1 Operational display

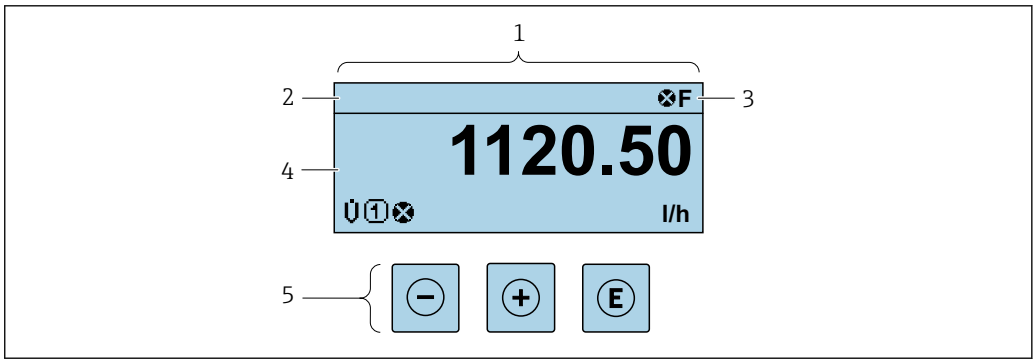

1 Operational display
2 Tag name
3 Status area
4 Display area for measured values (up to 4 lines)
5 Operating elements → 📄 53

Status area

The following symbols appear in the status area of the operational display at the top right:
- Status signals→ 📄 140
  - **F**: Failure
  - **C**: Function check
  - **S**: Out of specification
  - **M**: Maintenance required
- Diagnostic behavior→ 📄 141
  - ⊗: Alarm
  - ⚠: Warning
- 🔒: Locking (the device is locked via the hardware)
- ⇆: Communication (communication via remote operation is active)

Display area

In the display area, each measured value is prefaced by certain symbol types for further description:

Measured variables

Symbol	Meaning
$\dot{V}$	
G	Conductivity
$\dot{m}$	Mass flow

The number and display format of the measured variables can be configured via the **Format display** parameter (→ 101).

Totalizer

Symbol	Meaning
Σ	Totalizer The measurement channel number indicates which of the three totalizers is displayed.

Input

Symbol	Meaning
	Status input

Measurement channel numbers

Symbol	Meaning
1 ... 4	Measurement channel 1 to 4 The measurement channel number is displayed only if more than one channel is present for the same measured variable type (e.g. Totalizer 1 to 3).

Diagnostic behavior

Symbol	Meaning
	Alarm ▪ Measurement is interrupted. ▪ Signal outputs and totalizers assume the defined alarm condition. ▪ A diagnostic message is generated.
	Warning ▪ Measurement is resumed. ▪ The signal outputs and totalizers are not affected. ▪ A diagnostic message is generated.

The diagnostic behavior pertains to a diagnostic event that is relevant to the displayed measured variable.

8.3.2 Navigation view

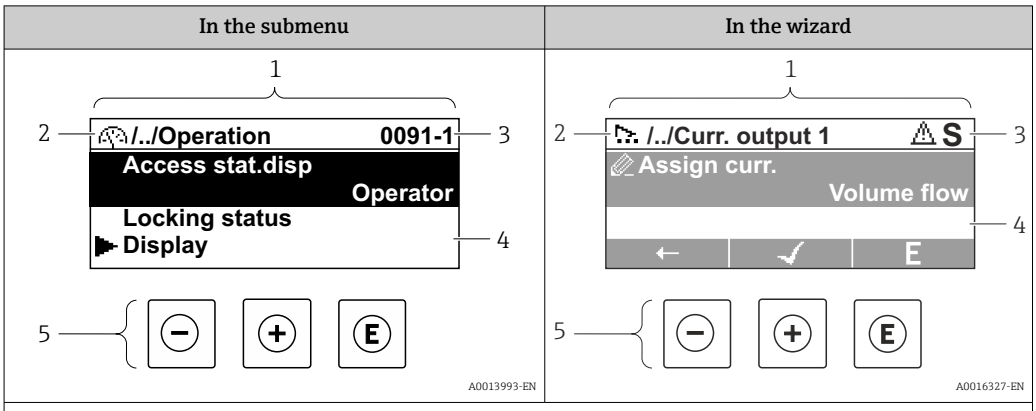

1 *Navigation view*
2 *Navigation path to current position*
3 *Status area*
4 *Display area for navigation*
5 *Operating elements* → 📄 53

Navigation path

The navigation path to the current position is displayed at the top left in the navigation view and consists of the following elements:
- The display symbol for the menu/submenu (▶) or the wizard (🧙).
- An omission symbol (/ ../) for operating menu levels in between.
- Name of the current submenu, wizard or parameter

	Display symbol	Omission symbol	Parameter
	↓	↓	↓
Example	▶	/ ../	Indication

For more information about the icons in the menu, refer to the "Display area" section → 📄 49

Status area

The following appears in the status area of the navigation view in the top right corner:
- In the submenu
  - The direct access code to the parameter (e.g., 0022-1)
  - If a diagnostic event is present, the diagnostic behavior and status signal
- In the wizard
  If a diagnostic event is present, the diagnostic behavior and status signal

- For information on the diagnostic behavior and status signal → 📄 140
- For information on the function and entry of the direct access code → 📄 55

Display area

Menus

Symbol	Meaning
	Operation Is displayed: ▪ In the menu next to the "Operation" selection ▪ At the left in the navigation path in the **Operation** menu

	Setup Is displayed: ▪ In the menu next to the "Setup" selection ▪ At the left in the navigation path in the **Setup** menu
	Diagnosis Is displayed: ▪ In the menu next to the "Diagnostics" selection ▪ At the left in the navigation path in the **Diagnostics** menu
	Expert Is displayed: ▪ In the menu next to the "Expert" selection ▪ At the left in the navigation path in the **Expert** menu

Submenus, wizards, parameters

Symbol	Meaning
	Submenu
	Wizards
	Parameters within a wizard No display symbol exists for parameters in submenus.

Locking procedure

Symbol	Meaning
	Parameter locked When displayed in front of a parameter name, indicates that the parameter is locked. ▪ By a user-specific access code ▪ By the hardware write protection switch

Wizards

Symbol	Meaning
	Switches to the previous parameter.
	Confirms the parameter value and switches to the next parameter.
E	Opens the editing view of the parameter.

8.3.3 Editing view

Numeric editor

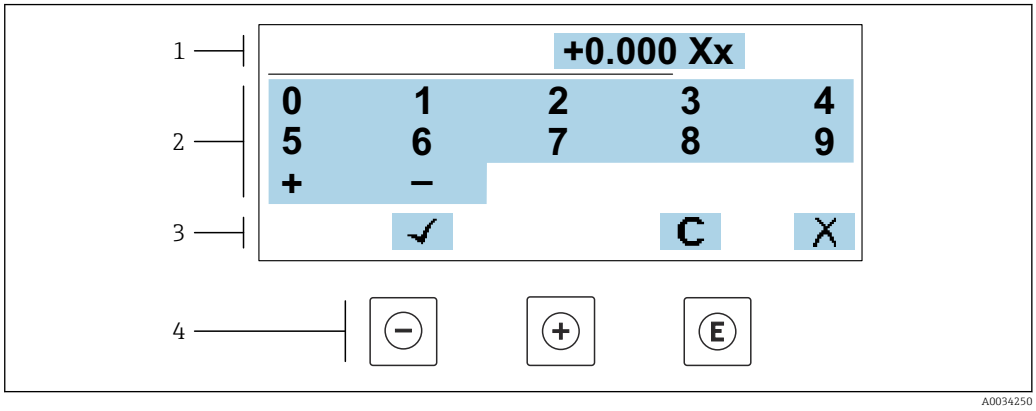

16 *For entering values in parameters (e.g. limit values)*

1 *Entry display area*
2 *Input screen*
3 *Confirm, delete or reject entry*
4 *Operating elements*

Text editor

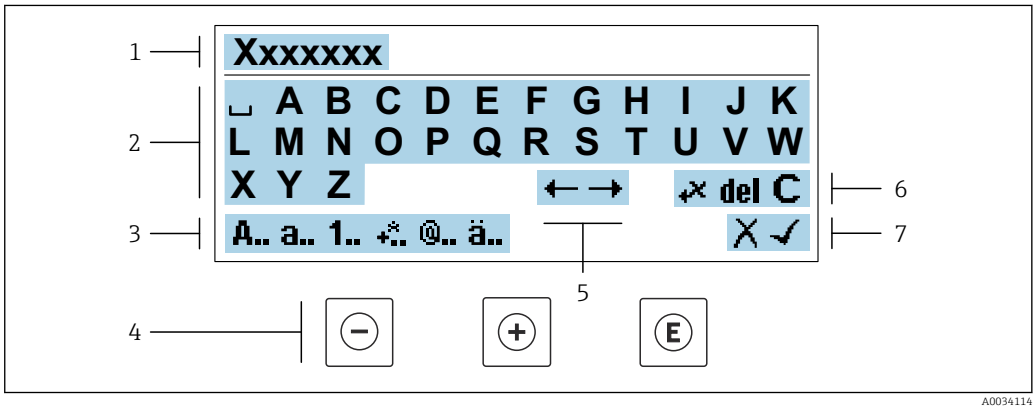

17 *For entering text in parameters (e.g. device tag)*

1 *Entry display area*
2 *Current input screen*
3 *Change input screen*
4 *Operating elements*
5 *Move entry position*
6 *Delete entry*
7 *Reject or confirm entry*

Using the operating elements in the editing view

Operating key	Meaning
⊖	**Minus key** Move the entry position to the left.
⊕	**Plus key** Move the entry position to the right.

Operating key	Meaning
E	**Enter key** ▪ Pressing the key briefly confirms your selection. ▪ Pressing the key for 2 s confirms your entry.
− +	**Escape key combination (press keys simultaneously)** Close the editing view without accepting a change.

Input screens

Symbol	Meaning
A..	Upper case
a..	Lower case
1..	Numbers
+..	Punctuation marks and special characters: = + − * / ² ³ ¼ ½ ¾ ( ) [ ] < > { }
@..	Punctuation marks and special characters: ' " ` ^ . , ; : ? ! % µ ° € $ £ ¥ § @ # / \ I ~ & _
ä..	Umlauts and accents

Controlling data entries

Symbol	Meaning
←→	Move entry position
✕	Reject entry
✓	Confirm entry
←	Delete character immediately to the left of the entry position
del	Delete character immediately to the right of the entry position
C	Clear all the characters entered

8.3.4 Operating elements

Operating key	Meaning
⊖	**Minus key** *In menu, submenu* Moves the selection bar upwards in a picklist *In wizards* Goes to previous parameter *In the text and numeric editor* Move the entry position to the left.
⊕	**Plus key** *In menu, submenu* Moves the selection bar downwards in a picklist *In wizards* Goes to the next parameter *In the text and numeric editor* Move the entry position to the right.

E	**Enter key**
	In the operational display
	Pressing the key briefly opens the operating menu.
	In menu, submenu
	▪ Pressing the key briefly:
	  ▪ Opens the selected menu, submenu or parameter.
	  ▪ Starts the wizard.
	  ▪ If help text is open, closes the help text of the parameter.
	▪ Pressing the key for 2 s in a parameter:
	  If present, opens the help text for the function of the parameter.
	In wizards
	Opens the editing view of the parameter and confirms the parameter value
	In the text and numeric editor
	▪ Pressing the key briefly confirms your selection.
	▪ Pressing the key for 2 s confirms your entry.

⊖ + ⊕	**Escape key combination (press keys simultaneously)**
	In menu, submenu
	▪ Pressing the key briefly:
	  ▪ Exits the current menu level and takes you to the next higher level.
	  ▪ If help text is open, closes the help text of the parameter.
	▪ Pressing the key for 2 s returns you to the operational display ("home position").
	In wizards
	Exits the wizard and takes you to the next higher level
	In the text and numeric editor
	Exits the Editing view without applying the changes.

⊖ + E	**Minus/Enter key combination (press and hold down the keys simultaneously)**
	▪ If keypad lock is active:
	  Pressing the key for 3 s deactivates the keypad lock.
	▪ If keypad lock is not active:
	  Pressing the key for 3 s opens the context menu including the option for activating the keypad lock.

8.3.5 Opening the context menu

Using the context menu, the user can call up the following menus quickly and directly from the operational display:

- Setup
- Data backup
- Simulation

Calling up and closing the context menu

The user is in the operational display.

1. Press the ⊟ and Ⓔ keys for longer than 3 seconds.
   ↳ The context menu opens.

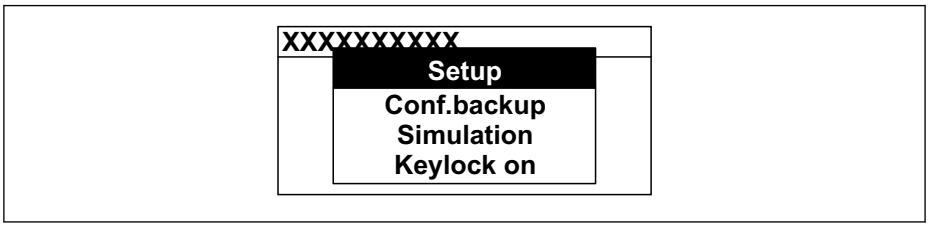

A0034608-EN

2. Press ⊟ + ⊞ simultaneously.
   ↳ The context menu is closed and the operational display appears.

Calling up the menu via the context menu

1. Open the context menu.
2. Press ⊞ to navigate to the desired menu.
3. Press Ⓔ to confirm the selection.
   ↳ The selected menu opens.

8.3.6 Navigating and selecting from list

Different operating elements are used to navigate through the operating menu. The navigation path is displayed on the left in the header. Icons are displayed in front of the individual menus. These icons are also shown in the header during navigation.

For an explanation of the navigation view with symbols and operating elements → 49

Example: Setting the number of displayed measured values to "2 values"

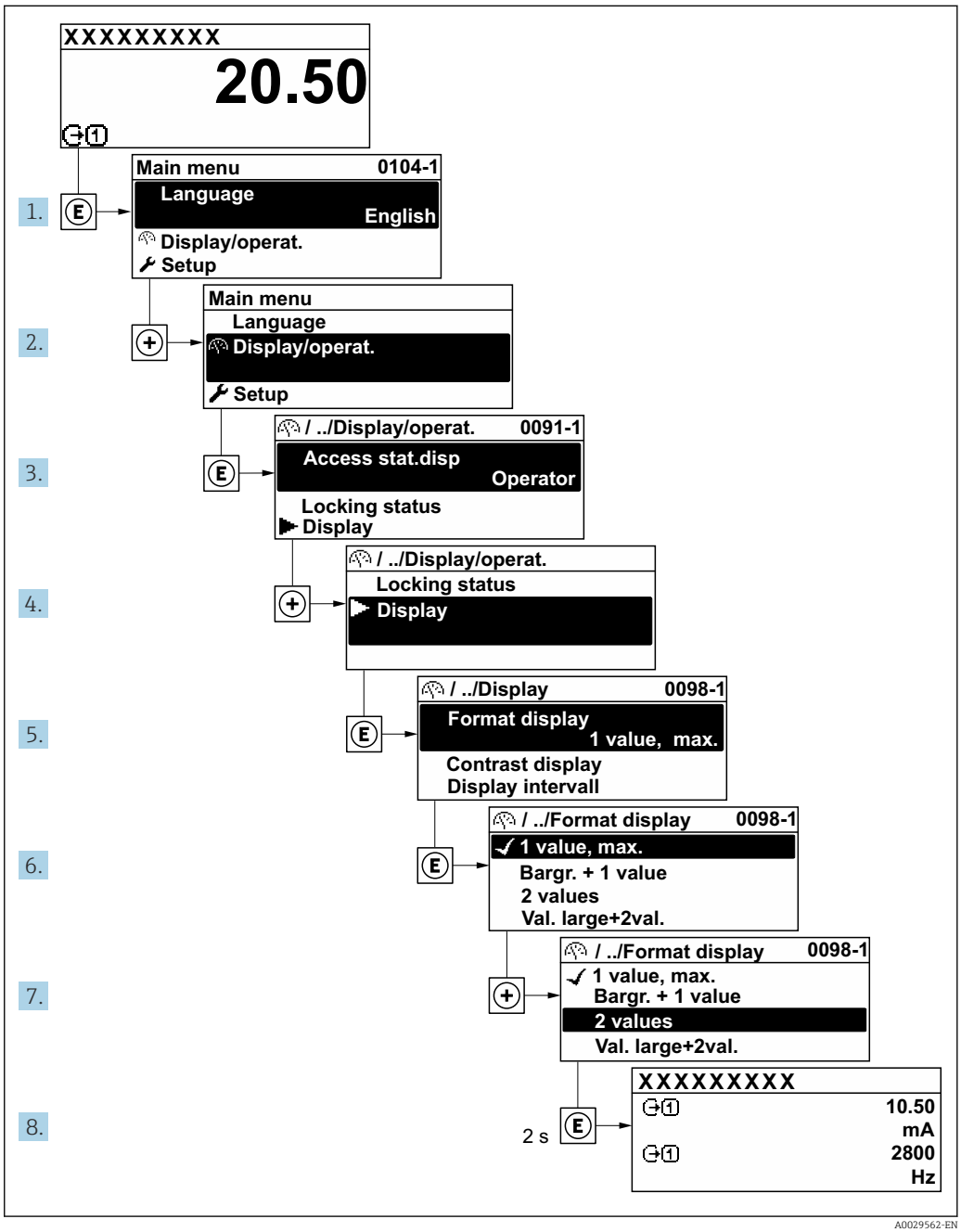

8.3.7 Calling the parameter directly

A parameter number is assigned to every parameter to be able to access a parameter directly via the onsite display. Entering this access code in the **Direct access** parameter calls up the desired parameter directly.

Navigation path
Expert → Direct access

The direct access code consists of a 5-digit number (at maximum) and the channel number, which identifies the channel of a process variable: e.g. 00914-2. In the navigation view, this appears on the right-hand side in the header of the selected parameter.

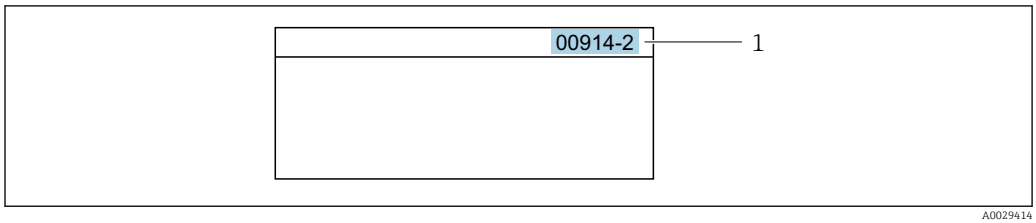

1 Direct access code

Note the following when entering the direct access code:
- The leading zeros in the direct access code do not have to be entered.
  Example: Enter **"914"** instead of **"00914"**
- If no channel number is entered, channel 1 is opened automatically.
  Example: Enter **00914** → **Assign process variable** parameter
- If a different channel is opened: Enter the direct access code with the corresponding channel number.
  Example: Enter **00914-2** → **Assign process variable** parameter

For the direct access codes of the individual parameters, see the "Description of Device Parameters" document for the device

8.3.8 Calling up help text

Help text is available for some parameters and can be called up from the navigation view. The help text provides a brief explanation of the parameter function and thereby supports swift and safe commissioning.

Calling up and closing the help text

The user is in the navigation view and the selection bar is on a parameter.

1. Press E for 2 s.
   ↳ The help text for the selected parameter opens.

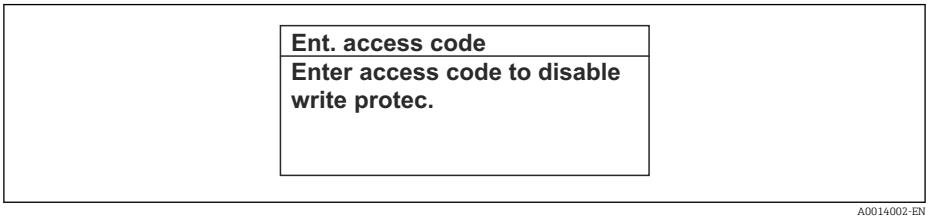

18 Example: Help text for parameter "Enter access code"

2. Press − + + simultaneously.
   ↳ The help text is closed.

8.3.9 Changing the parameters

Parameters can be changed via the numeric editor or text editor.
- Numeric editor: Change values in a parameter, e.g. specifications for limit values.
- Text editor: Enter text in a parameter, e.g. tag name.

A message is displayed if the value entered is outside the permitted value range.

Ent. access code
Invalid or out of range input value Min:0 Max:9999

A0014049-EN

For a description of the editing view - consisting of the text editor and numeric editor - with symbols → 51, for a description of the operating elements → 53

8.3.10 User roles and related access authorization

The two user roles "Operator" and "Maintenance" have different write access to the parameters if the customer defines a user-specific access code. This protects the device configuration via the local display from unauthorized access → 122.

Defining access authorization for user roles

An access code is not yet defined when the device is delivered from the factory. Access authorization (read and write access) to the device is not restricted and corresponds to the "Maintenance" user role.

- Define the access code.
  - The "Operator" user role is redefined in addition to the "Maintenance" user role. Access authorization differs for the two user roles.

Access authorization to parameters: "Maintenance" user role

Access code status	Read access	Write access
An access code has not yet been defined (factory setting).	✔	✔
After an access code has been defined.	✔	✔ [1]

1) The user only has write access after entering the access code.

Access authorization to parameters: "Operator" user role

Access code status	Read access	Write access
After an access code has been defined.	✔	– [1]

1) Despite the defined access code, certain parameters can always be modified and thus are excluded from the write protection as they do not affect the measurement: write protection via access code → 122

The user role with which the user is currently logged on is indicated by the **Access status** parameter. Navigation path: Operation → Access status

8.3.11 Disabling write protection via access code

If the -symbol appears on the local display in front of a parameter, the parameter is write-protected by a user-specific access code and its value cannot be changed at the moment using local operation → 122.

Parameter write protection via local operation can be disabled by entering the user-specific access code in the **Enter access code** parameter (→ 108) via the respective access option.

1. After you press E, the input prompt for the access code appears.

2. Enter the access code.
   ↳ The 🔒-symbol in front of the parameters disappears; all previously write-protected parameters are now re-enabled.

8.3.12 Enabling and disabling the keypad lock

The keypad lock makes it possible to block access to the entire operating menu via local operation. As a result, it is no longer possible to navigate through the operating menu or change the values of individual parameters. Users can only read the measured values on the operational display.

The keypad lock is switched on and off via the context menu.

Switching on the keypad lock

The keypad lock is switched on automatically:
- If the device has not been operated via the display for > 1 minute.
- Each time the device is restarted.

To activate the keylock manually:

1. The device is in the measured value display.
   Press the ⊟ and Ⓔ keys for 3 seconds.
   ↳ A context menu appears.
2. In the context menu select the **Keylock on** option.
   ↳ The keypad lock is switched on.

If the user attempts to access the operating menu while the keypad lock is active, the **Keylock on** message appears.

Switching off the keypad lock

- The keypad lock is switched on.
  Press the ⊟ and Ⓔ keys for 3 seconds.
  ↳ The keypad lock is switched off.

8.4 Access to operating menu via web browser

8.4.1 Function range

The integrated web server can be used to operate and configure the device via a web browser via Ethernet-APL, service interface (CDI-RJ45) or via WLAN interface . The structure of the operating menu is the same as for the local display. In addition to the measured values, status information on the device is displayed and can be used to monitor device health. Furthermore the device data can be managed and the network parameters can be configured.

A device that has a WLAN interface (can be ordered as an option) is required for the WLAN connection: order code for "Display; Operation", option G "4-line, illuminated; touch control + WLAN". The device acts as an Access Point and enables communication by computer or a mobile handheld terminal.

For additional information on the web server, see the Special Documentation for the device.

8.4.2 Requirements

Computer hardware

Hardware	Interface	
	RJ45	WLAN
Interface	The computer must have a RJ45 interface. [1]	The operating unit must have a WLAN interface.
Connection	Standard Ethernet cable	Connection via wireless local area network.
Screen	Recommended size: ≥12" (depends on the screen resolution)	

1) Recommended cable: CAT5e, CAT6 or CAT7, with shielded plug (e.g. YAMAICHI product; part no. Y-ConProfixPlug63/Prod. ID: 82-006660)

Computer software

Software	Interface	
	RJ45	WLAN

Recommended operating systems	▪ Microsoft Windows 8 or higher.
	▪ Mobile operating systems:
	  ▪ iOS
	  ▪ Android
	ℹ Microsoft Windows XP and Windows 7 is supported.	

Web browsers supported	▪ Microsoft Edge ▪ Mozilla Firefox ▪ Google Chrome ▪ Safari	

Computer settings

Settings	Interface	
	RJ45	WLAN
User rights	Appropriate user rights (e.g. administrator rights) for TCP/IP and proxy server settings are necessary (e.g. for adjusting the IP address, subnet mask etc.).	
Proxy server settings of the web browser	The web browser's *Use a Proxy Server for Your LAN* setting must be **deselected** .	
JavaScript	JavaScript must be enabled. ℹ If JavaScript cannot be enabled: Enter http://192.168.1.212/servlet/basic.html in the address bar of the web browser. A fully functional but simplified version of the operating menu structure starts in the web browser. ℹ When installing a new firmware version: To enable correct data display, clear the temporary memory (cache) under **Internet options** in the web browser.	JavaScript must be enabled. ℹ The WLAN display requires JavaScript support.
Network connections	Use only the active network connections for the measuring instrument.	
	Switch off all other network connections such as WLAN for example.	Switch off all other network connections.

ℹ In the event of connection problems: → 📄 137

Measuring device: Via CDI-RJ45 service interface

Device	CDI-RJ45 service interface
Measuring device	The measuring device has an RJ45 interface.
Web server	Web server must be enabled; factory setting: ON For information on enabling the Web server → 64

Measuring device: via WLAN interface

Device	WLAN interface
Measuring device	The measuring device has a WLAN antenna: ▪ Transmitter with integrated WLAN antenna ▪ Transmitter with external WLAN antenna
Web server	Web server and WLAN must be enabled; factory setting: ON For information on enabling the Web server → 64

8.4.3 Connecting the device

Via service interface (CDI-RJ45)

Preparing the measuring device

1. Depending on the housing version:
   Loosen the securing clamp or fixing screw of the housing cover.
2. Depending on the housing version:
   Unscrew or open the housing cover.
3. Connect the computer to the RJ45 plug via the standard Ethernet connecting cable..

Configuring the Internet protocol of the computer

The following information refers to the default Ethernet settings of the device.

IP address of the device: 192.168.1.212 (factory setting)

The IP address can be assigned to the measuring device in a variety of ways:
- Software addressing:
  The IP address is entered via the **IP address** parameter .
- DIP switch for "Default IP address":
  To establish the network connection via the service interface (CDI-RJ45): the fixed IP address 192.168.1.212 is used .

To establish a network connection via the service interface (CDI-RJ45): set the "Default IP address" DIP switch to **ON**. The measuring device then has the fixed IP address: 192.168.1.212. The fixed IP address 192.168.1.212 can now be used to establish the connection to the network.

1. Via DIP switch 2, activate the default IP address 192.168.1.212: .
2. Switch on the measuring device.
3. Connect the computer to the RJ45 plug via the standard Ethernet cable → 66.
4. If a 2nd network card is not used, close all the applications on the notebook.
   ↳ Applications requiring Internet or a network, such as e-mail, SAP applications, Internet or Windows Explorer.
5. Close any open Internet browsers.
6. Configure the properties of the Internet protocol (TCP/IP) as defined in the table:

IP address	192.168.1.XXX; for XXX all numerical sequences except: 0, 212 and 255 → e.g. 192.168.1.213
Subnet mask	255.255.255.0
Default gateway	192.168.1.212 or leave cells empty

Via WLAN interface

Configuring the Internet protocol of the mobile device

NOTICE

If the WLAN connection is lost during the configuration, settings made may be lost.

- Make sure that the WLAN connection is not disconnected while configuring the device.

NOTICE

Please note the following to avoid a network conflict:

- Avoid accessing the measuring instrument simultaneously from the same mobile device via the service interface (CDI-RJ45) and the WLAN interface.
- Only activate one service interface (CDI-RJ45 or WLAN interface).
- If simultaneous communication is necessary: configure different IP address ranges, e.g. 192.168.0.1 (WLAN interface) and 192.168.1.212 (CDI-RJ45 service interface).

Preparing the mobile terminal

- Enable WLAN on the mobile terminal.

Establishing a WLAN connection from the mobile terminal to the measuring device

1. In the WLAN settings of the mobile terminal:
   Select the measuring device using the SSID (e.g. EH_Promag_300_A802000).
2. If necessary, select the WPA2 encryption method.
3. Enter the password:
   Serial number of the measuring device ex-works (e.g. L100A802000).
   ↳ The LED on the display module flashes. It is now possible to operate the measuring device with the web browser, FieldCare or DeviceCare.

The serial number can be found on the nameplate.

To ensure the safe and swift assignment of the WLAN network to the measuring point, it is advisable to change the SSID name. It should be possible to clearly assign the new SSID name to the measuring point (e.g. tag name) because it is displayed as the WLAN network.

Terminating the WLAN connection

- After configuring the device:
  Terminate the WLAN connection between the mobile terminal and measuring device.

Starting the web browser

1. Start the web browser on the computer.

2. Enter the IP address of the web server in the address line of the web browser: 192.168.1.212
   ↳ The login page appears.

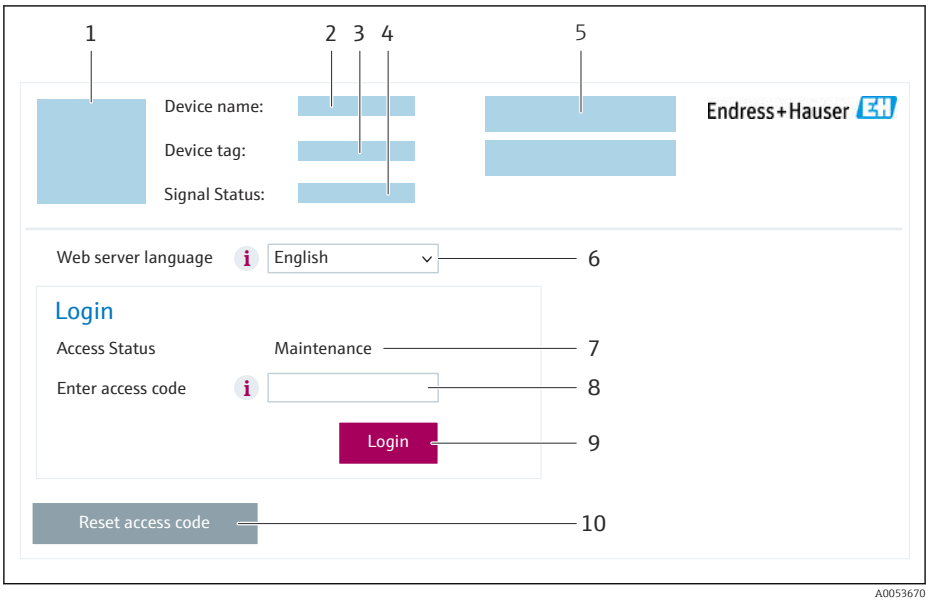

1 *Picture of device*
2 *Device name*
3 *Device tag*
4 *Status signal*
5 *Current measured values*
6 *Operating language*
7 *User role*
8 *Access code*
9 *Login*
10 *Reset access code (→ 119)*

If a login page does not appear, or if the page is incomplete → 137

8.4.4 Logging on

1. Select the preferred operating language for the Web browser.
2. Enter the user-specific access code.
3. Press **OK** to confirm your entry.

Access code	0000 (factory setting); can be changed by customer

If no action is performed for 10 minutes, the Web browser automatically returns to the login page.

8.4.5 User interface

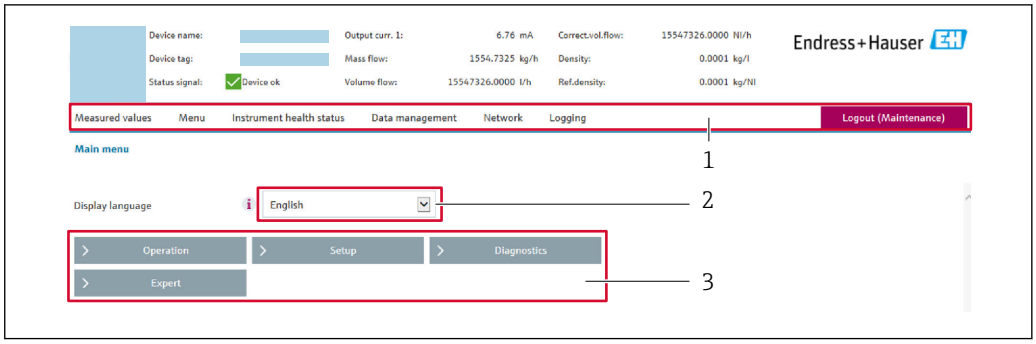

A0029418

1 *Function row*
2 *Local display language*
3 *Navigation area*

Header

The following information appears in the header:
- Device name
- Device tag
- Device status with status signal → 📄 143
- Current measured values

Function row

Functions	Meaning
Measured values	Displays the measured values of the measuring instrument
Menu	▪ Access to the operating menu from the measuring instrument ▪ The structure of the operating menu is the same as for the local display 📖 Detailed information on the "Description of Device Parameters" operating menu
Device status	Displays the diagnostic messages currently pending, listed in order of priority

Data management	Data exchange between computer and measuring instrument:
	▪ Device configuration:
	  ▪ Load settings from the device (XML format, save configuration)
	  ▪ Save settings to the device (XML format, restore configuration)
	▪ Logbook - Export Event logbook (.csv file)
	▪ Documents - Export documents:
	  ▪ Export backup data record (.csv file, create documentation of the measuring point configuration)
	  ▪ Verification report (PDF file, only available with the "Heartbeat Verification" application package)
	▪ Firmware update - Flashing a firmware version

Network	Configuration and checking of all the parameters required for establishing the connection to the measuring instrument: ▪ Network settings (e.g. IP address, MAC address) ▪ Device information (e.g. serial number, firmware version)
Logout	End the operation and call up the login page

Navigation area

The menus, the associated submenus and parameters can be selected in the navigation area.

Working area

Depending on the selected function and the related submenus, various actions can be performed in this area:
- Configuring parameters
- Reading measured values
- Calling up help text
- Starting an upload/download

8.4.6 Disabling the Web server

The Web server of the measuring device can be switched on and off as required using the **Web server functionality** parameter.

Navigation

"Expert" menu → Communication → Web server

Parameter overview with brief description

Parameter	Description	Selection	Factory setting
Web server functionality	Switch the Web server on and off.	▪ Off ▪ HTML Off ▪ On	On

Function scope of the "Web server functionality" parameter

Option	Description
Off	▪ The Web server is completely disabled. ▪ Port 80 is locked.
HTML Off	The HTML version of the Web server is not available.
On	▪ The complete Web server functionality is available. ▪ JavaScript is used. ▪ The password is transferred in an encrypted state. ▪ Any change to the password is also transferred in an encrypted state.

Enabling the Web server

If the Web server is disabled it can only be re-enabled with the **Web server functionality** parameter via the following operating options:
- Via local display
- Via Bedientool "FieldCare"
- Via "DeviceCare" operating tool

8.4.7 Logging out

Before logging out, perform a data backup via the **Data management** function (upload configuration from device) if necessary.

1. Select the **Logout** entry in the function row.
   ↳ The home page with the Login box appears.
2. Close the Web browser.

3. If no longer needed:
   Reset the modified properties of the Internet protocol (TCP/IP) → 🗎 60.

If communication with the web server was established via the default IP address 192.168.1.212, DIP switch no. 10 must be reset (from **ON** → **OFF**). Afterwards, the IP address of the device is active again for network communication.

8.5 Operation via SmartBlue app

The device can be operated and configured with the SmartBlue App.

- The SmartBlue app must be downloaded onto a mobile device for this purpose
- For information on the compatibility of the SmartBlue app with mobile devices, see **Apple App Store (iOS devices)** or **Google Play Store (Android devices)**
- Incorrect operation by unauthorized persons is prevented by means of encrypted communication and password encryption.
- The Bluetooth® function can be deactivated after initial device setup.

ANDROID APP ON Google Play

Download on the App Store

A0033202

19 QR code for free Endress+Hauser SmartBlue App

Download and installation:

1. Scan the QR code or enter **SmartBlue** in the search field of the Apple App Store (iOS) or Google Play Store (Android).
2. Install and start the SmartBlue app.
3. For Android devices: enable location tracking (GPS) (not required for iOS devices).
4. Select a device that is ready to receive from the device list displayed.

Login:

1. Enter the user name: admin
2. Enter the initial password: serial number of the device
3. Change the password after logging in for the first time

Information on password and reset code

For devices that meet the requirements of IEC 62443-4-1 "Secure product developement lifecycle management" ("ProtectBlue"):
- If the user-defined password is lost: refer to the user management instructions and the reset button in the operating manual.
- Refer to the associated Security Manual (SD).

For all other devices (without "ProtectBlue"):
- If the user-defined password is lost, access can be restored via a reset code. The reset code is the serial number of the device in reverse. The original password is once again valid after the reset code has been entered.
- The reset code can also be changed in addition to the password.
- If the user-defined reset code is lost, the password can no longer be reset via the SmartBlue app. Contact Endress+Hauser Service in this case.

8.6 Access to the operating menu via the operating tool

The structure of the operating menu in the operating tools is the same as for operation via the local display.

8.6.1 Connecting the operating tool

Via APL network

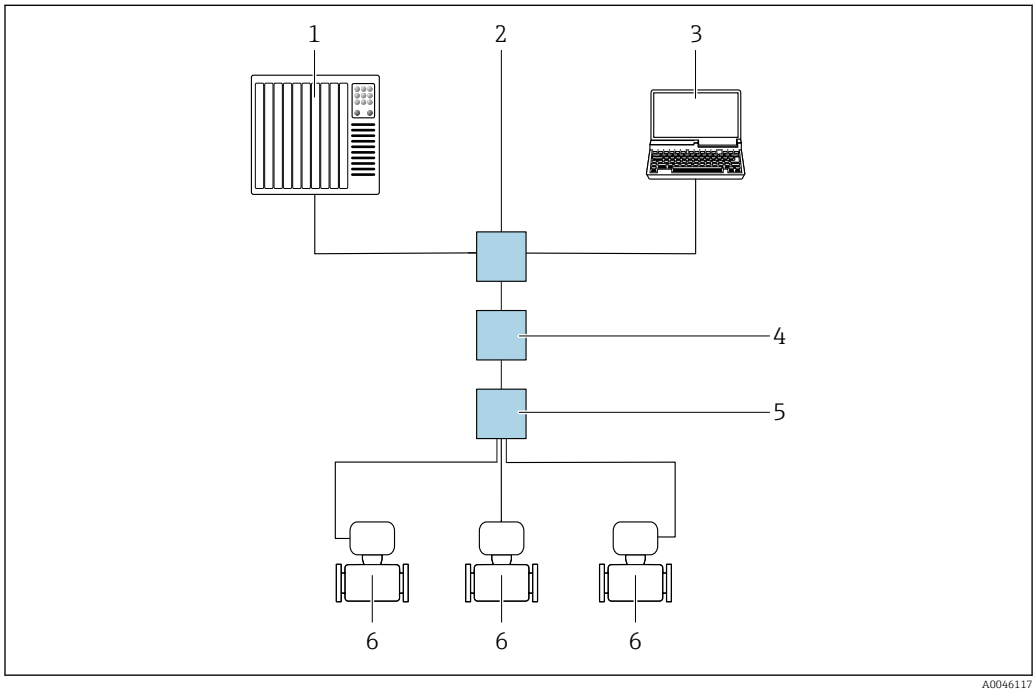

20 Options for remote operation via APL network

1 *Automation system, e.g., Simatic S7 (Siemens)*
2 *Ethernet switch, e.g. Scalance X204 (Siemens)*
3 *Computer with web browser for accessing the integrated web server or computer with operating tool (e.g. FieldCare, DeviceCare with PROFINET COM DTM or SIMATIC PDM with FDI package)*
4 *APL power switch (optional)*
5 *APL field switch*
6 *Measuring instrument*

Service interface

Via service interface (CDI-RJ45)

To configure the device on site, a point-to-point connection can be established. The connection is made with the housing open, directly via the device's service interface (CDI-RJ45).

An adapter for the RJ45 to the M12 connector is optionally available for the non-hazardous area:

Order code for "Accessories", option **NB**: "Adapter RJ45 M12 (service interface)"

The adapter connects the service interface (CDI-RJ45) to an M12 connector mounted in the cable entry. The connection to the service interface can be established via an M12 connector without opening the device.

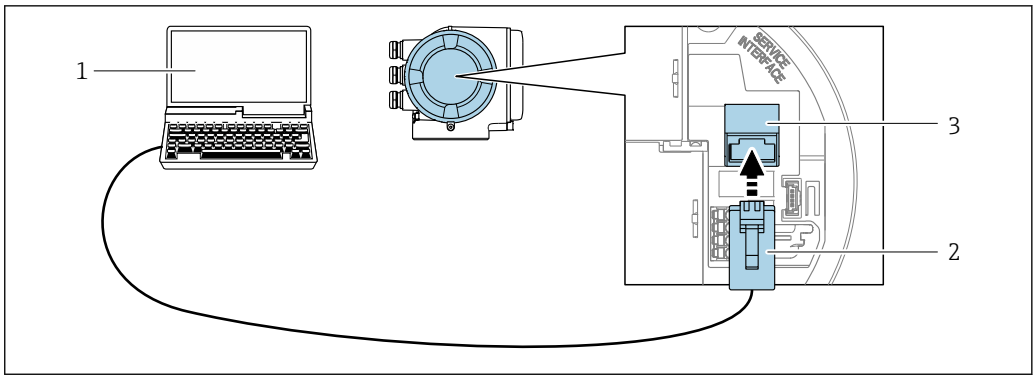

21 Connection via service interface (CDI-RJ45)

1. *Computer with web browser for accessing the integrated web server or computer with operating tool, e.g. "FieldCare", "DeviceCare", with COM DTM "CDI Communication TCP/IP" or Modbus DTM*
2. *Standard Ethernet connecting cable with RJ45 connector*
3. *Service interface (CDI-RJ45) of the measuring instrument with access to the integrated web server*

Via WLAN interface

The optional WLAN interface is available on the following device version:
Order code for "Display; operation", option G "4-line, illuminated; touch control + WLAN"

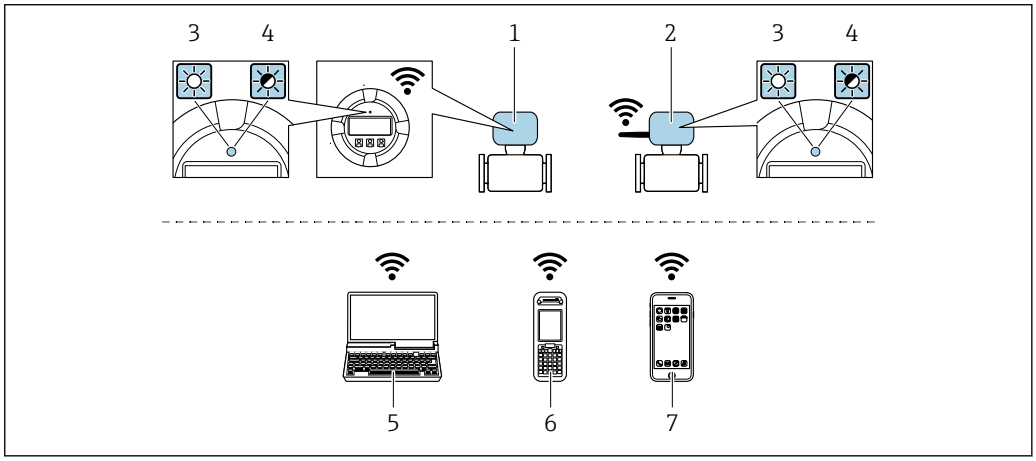

1. *Transmitter with integrated WLAN antenna*
2. *Transmitter with external WLAN antenna*
3. *LED lit constantly: WLAN reception is enabled on measuring instrument*
4. *LED flashing: WLAN connection established between operating unit and measuring instrument*
5. *Computer with WLAN interface and web browser for accessing integrated device web server or with operating tool e.g FieldCare, DeviceCare)*
6. *Mobile handheld terminal with WLAN interface and web browser for accessing integrated device web server or operating tool (e.g. FieldCare, DeviceCare)*
7. *Smartphone or tablet (e.g. Field Xpert SMT70)*

Function	WLAN: IEEE 802.11 b/g (2.4 GHz)
Encryption	WPA2-PSK AES-128 (in accordance with IEEE 802.11i)
Configurable WLAN channels	1 to 11
Degree of protection	IP66/67
Available antennas	▪ Internal antenna ▪ External antenna (optional) In the event of poor transmission/reception conditions at the place of installation. ℹ Only 1 antenna is active at any one time!

Range	▪ Internal antenna: typically 10 m (32 ft) ▪ External antenna: typically 50 m (164 ft)
Materials (external antenna)	▪ Antenna: ASA plastic (acrylonitrile styrene acrylate) and nickel-plated brass ▪ Adapter: Stainless steel and nickel-plated brass ▪ Cable: Polyethylene ▪ Plug: Nickel-plated brass ▪ Angle bracket: Stainless steel

Configuring the Internet protocol of the mobile device

NOTICE

If the WLAN connection is lost during the configuration, settings made may be lost.

▶ Make sure that the WLAN connection is not disconnected while configuring the device.

NOTICE

Please note the following to avoid a network conflict:

▶ Avoid accessing the measuring instrument simultaneously from the same mobile device via the service interface (CDI-RJ45) and the WLAN interface.
▶ Only activate one service interface (CDI-RJ45 or WLAN interface).
▶ If simultaneous communication is necessary: configure different IP address ranges, e.g. 192.168.0.1 (WLAN interface) and 192.168.1.212 (CDI-RJ45 service interface).

Preparing the mobile terminal

▶ Enable WLAN on the mobile terminal.

Establishing a WLAN connection from the mobile terminal to the measuring device

1. In the WLAN settings of the mobile terminal:
   Select the measuring device using the SSID (e.g. EH_Promag_300_A802000).
2. If necessary, select the WPA2 encryption method.
3. Enter the password:
   Serial number of the measuring device ex-works (e.g. L100A802000).
   ↳ The LED on the display module flashes. It is now possible to operate the measuring device with the web browser, FieldCare or DeviceCare.

The serial number can be found on the nameplate.

To ensure the safe and swift assignment of the WLAN network to the measuring point, it is advisable to change the SSID name. It should be possible to clearly assign the new SSID name to the measuring point (e.g. tag name) because it is displayed as the WLAN network.

Terminating the WLAN connection

▶ After configuring the device:
  Terminate the WLAN connection between the mobile terminal and measuring device.

8.6.2 FieldCare

Function range

FDT-based (Field Device Technology) plant asset management tool from Endress+Hauser. It can configure all smart field units in a system and helps you manage them. By using the status information, it is also a simple but effective way of checking their status and condition.

Access is via:
- CDI-RJ45 service interface → 66
- WLAN interface → 67

Typical functions:
- Transmitter parameter configuration
- Loading and saving of device data (upload/download)
- Documentation of the measuring point
- Visualization of the measured value memory (line recorder) and event logbook

- Operating Instructions BA00027S
- Operating Instructions BA00059S

Source for device description files → 70

8.6.3 DeviceCare

Function range

Tool for connecting and configuring Endress+Hauser field devices.

The fastest way to configure Endress+Hauser field devices is with the dedicated "DeviceCare" tool. Together with the device type managers (DTMs) it presents a convenient, comprehensive solution.

Innovation brochure IN01047S

Source for device description files → 70

8.6.4 SIMATIC PDM

Function range

Standardized, vendor-independent program from Siemens for the operation, configuration, maintenance and diagnosis of intelligent field devices via the PROFINET protocol.

Source for device description files → 70

9 System integration

9.1 Overview of device description files

9.1.1 Current version data for the device

Firmware version	01.00.zz	▪ On the title page of the manual ▪ On the transmitter nameplate ▪ Firmware version Diagnostics → Device information → Firmware version
Manufacturer	17	Manufacturer Expert → Communication → Physical block → Manufacturer
Device ID	0xA43C	–
Device type ID	Promag 300	Device type Expert → Communication → Physical block → Device type
Device revision	1	–
PROFINET over Ethernet-APL version	2.43	Version of the PROFINET specification

For an overview of the various firmware versions for the device → 📖 171

9.1.2 Operating tools

The suitable device description file for the individual operating tools is listed in the table below, along with information on where the file can be acquired.

FieldCare	▪ www.endress.com → Downloads area ▪ USB stick (contact Endress+Hauser) ▪ E-mail → Downloads area
DeviceCare	▪ www.endress.com → Downloads area ▪ E-mail → Downloads area
SIMATIC PDM (Siemens)	www.endress.com → Downloads area

9.2 Device master file (GSD)

In order to integrate field devices into a bus system, the PROFIBUS system needs a description of the device parameters, such as output data, input data, data format and data volume.

These data are available in the device master file (GSD) which is provided to the automation system when the communication system is commissioned. In addition device bit maps, which appear as icons in the network structure, can also be integrated.

The device master file (GSD) is in XML format, and the file is created in the GSDML description markup language.

With the PA Profile 4.02 device master file (GSD) it is possible to exchange field devices made by different manufacturers without having to reconfigure.

Two different device master files (GSD) can be used: Manufacturer-specific GSD and PA Profile GSD.

9.2.1 File name of the manufacturer-specific device master file (GSD)

Example of the name of a device master file:

GSDML-V2.43-EH-PROMAG_300_500_APL_yyyymmdd.xml

GSDML	Description language
V2.43	Version of the PROFINET specification
EH	Endress+Hauser
PROMAG	Instrument family
300_500_APL	Transmitter
yyyymmdd	Date of issue (yyyy: year, mm: month, dd: day)
.xml	File name extension (XML file)

9.2.2 File name of the PA Profile device master file (GSD)

Example of the name of a PA Profile device master file:

GSDML-V2.43-PA_Profile_V4.02-B332-FLOW_EL_MAGNETIC-yyyymmdd.xml

GSDML	Description language
V2.43	Version of the PROFINET specification
PA_Profile_V4.02	Version of the PA Profile specification
B332	PA Profile device identification
FLOW	Product line
EL_MAGNETIC	Flow measuring principle
yyyymmdd	Date of issue (yyyy: year, mm: month, dd: day)
.xml	File name extension (XML file)

API	Supported modules	Slot	Input and output variables
0x9700	Analog input	1	Volume flow
	Totalizer	2	Totalizer value: volume/volume Totalizer Control

Where to acquire the manufacturer-specific GSD:

Manufacturer-specific GSD:	www.endress.com → Downloads section
PA Profile GSD:	https://www.profibus.com/products/gsd-files/gsd-library-profile-for-process-control-devices-version-40 → Downloads section

9.3 Cyclic data transmission

9.3.1 Overview of the modules

The following graphic shows which modules are available to the device for cyclic data transfer. Cyclic data transfer is performed with an automation system.

Measuring device			Sub-slot	Direction Data flow	Control system
API	Modules	Slot			
0x9700	Analog Input 1 (Volume flow)	1	1	→	PROFINET
	Analog Input 2	20	1	→	
	Analog Input 3	21	1	→	
	Analog Input 4	22	1	→	
	Analog Input 5	23	1	→	
	Analog Input 6	24	1	→	
	Analog Input 7	25	1	→	
	Analog Input 8	26	1	→	
	Totalizer 1 (Volume)	2	1	→ ←	
	Totalizer 2	70	1	→ ←	
	Totalizer 3	71	1	→ ←	
	Binary Input 1 (Heartbeat)	80	1	→	
	Binary Input 2	81	1	→	
	Analog Output 1 (Temperature)	160	1	←	
	Analog Output 2 (Density)	161	1	←	
	Binary Input 1 (Heartbeat)	210	1	←	
	Binary Output 2	211	1	←	

9.3.2 Description of the modules

The data structure is described from the perspective of the automation system:
- Input data: Are sent from the measuring device to the automation system.
- Output data: Are sent from the automation system to the measuring device.

Analog Input module

Transmit input variables from the measuring device to the automation system.

Analog Input modules cyclically transmit the selected input variables, including the status, from the measuring device to the automation system. The input variable is depicted in the first four bytes in the form of a floating point number as per the IEEE 754 standard. The fifth byte contains standardized status information pertaining to the input variable.

Selection: input variable

Slot	Sub-slot	Input variables
1	1	Volume flow
20...26	1	▪ Volume flow ▪ Mass flow ▪ Corrected volume flow ▪ Flow velocity ▪ Temperature ▪ Electronics temperature ▪ Buildup index ▪ Current input 1 ▪ Current input 2 ▪ Current input 3 **Additional input variables with the Heartbeat Verification application package** ▪ Noise ▪ Coil current shot time ▪ Reference electrode potential against PE ▪ HBSI **Additional input variables with the Conductivity application package** ▪ Conductivity ▪ Corrected conductivity

Data structure

Output data of Analog Output

Byte 1	Byte 2	Byte 3	Byte 4	Byte 5
Measured value: floating point number (IEEE 754)				Status [1]

1) Status coding → 📄 78

Binary input module

Transmit binary input variables from the measuring device to the automation system.

Binary input variables are used by the measuring device to transmit the state of device functions to the automation system.

Binary Input modules cyclically transmit discrete input variables, including the status, from the measuring device to the automation system. The discrete input variable is depicted in the first byte. The second byte contains standardized status information pertaining to the input variable.

Selection: device function, binary input, slot 80

Slot	Sub-slot	Bit	Device function	Status (meaning)
80	1	0	Verification was not performed.	▪ 0 (device function not active) ▪ 1 (device function active)
		1	The device has failed the verification.	
		2	Currently performing verification.	
		3	Verification ended.	
		4	The device has failed the verification.	
		5	Verification carried out successfully.	
		6	Verification was not performed.	
		7	Reserved	

Selection: device function, binary input, slot 81

Slot	Sub-slot	Bit	Device function	Status (meaning)
81	1	0	Partially filled pipe detection	▪ 0 (device function not active) ▪ 1 (device function active)
		1	Low flow cut off	
		2	Reserved	
		3	Reserved	
		4	Reserved	
		5	Reserved	
		6	Reserved	
		7	Reserved	

Data structure

Input data of Binary Input

Byte 1	Byte 2
Binary Input	Status [1]

1) Status coding → 🗎 78

Volume module

Transmit the volume counter value from the measuring device to the automation system.

The Volume module cyclically transmits the volume, including the status, from the measuring device to the automation system. The totalizer value is depicted in the first four bytes in the form of a floating point number as per the IEEE 754 standard. The fifth byte contains standardized status information pertaining to the input variable.

Selection: input variable

Slot	Sub-slot	Input variables
2	1	Volume

Data structure

Volume input data

Byte 1	Byte 2	Byte 3	Byte 4	Byte 5
Measured value: floating point number (IEEE 754)				Status [1]

1) Status coding → 🗎 78

Volume Totalizer Control module

Transmit the volume counter value from the measuring device to the automation system.

The Volume Totalizer Control module cyclically transmits the volume, including the status, from the measuring device to the automation system. The totalizer value is depicted in the first four bytes in the form of a floating point number as per the IEEE 754 standard. The fifth byte contains standardized status information pertaining to the input variable.

Selection: input variable

Slot	Sub-slot	Input variables
2	1	Volume

Data structure

Volume Totalizer Control input data

Byte 1	Byte 2	Byte 3	Byte 4	Byte 5
Measured value: floating point number (IEEE 754)				Status [1]

1) Status coding → 🗎 78

Selection: output variable

Transmit the control value from the automation system to the measuring device.

Slot	Sub-slot	Value	Input variable
2	1	1	Reset to "0"
		2	Preset value
		3	Stop
		4	Totalize

Data structure

Volume Totalizer Control output data

Byte 1
Control variable

Totalizer module

Transmit totalizer value from the measuring device to the automation system.

The Totalizer module cyclically transmits a selected totalizer value, including the status, from the measuring device to the automation system. The totalizer value is depicted in the first four bytes in the form of a floating point number as per the IEEE 754 standard. The fifth byte contains standardized status information pertaining to the input variable.

Selection: input variable

Slot	Sub-slot	Input variable
70 to 71	1	▪ Mass flow ▪ Volume flow ▪ Corrected volume flow

Data structure

Totalizer input data

Byte 1	Byte 2	Byte 3	Byte 4	Byte 5
Measured value: floating point number (IEEE 754)				Status [1]

1) Status coding → 🗎 78

Totalizer Control module

Transmit totalizer value from the measuring device to the automation system.

The Totalizer Control module cyclically transmits a selected totalizer value, including the status, from the measuring device to the automation system. The totalizer value is depicted in the first four bytes in the form of a floating point number as per the IEEE 754 standard. The fifth byte contains standardized status information pertaining to the input variable.

Selection: input variable

Slot	Sub-slot	Input variable
70 to 71	1	▪ Mass flow ▪ Volume flow ▪ Corrected volume flow

Data structure

Totalizer Control input data

Byte 1	Byte 2	Byte 3	Byte 4	Byte 5
Measured value: floating point number (IEEE 754)				Status [1]

1) Status coding → 📄 78

Selection: output variable

Transmit the control value from the automation system to the measuring device.

Slot	Sub-slot	Value	Input variable
70 to 71	1	1	Reset to "0"
		2	Preset value
		3	Stop
		4	Totalize

Data structure

Totalizer Control output data

Byte 1
Control variable

Analog Output module

Transmit a compensation value from the automation system to the measuring device.

Analog Output modules cyclically transmit compensation values, including the status and associated unit, from the automation system to the measuring device. The compensation value is depicted in the first four bytes in the form of a floating point number as per the IEEE 754 standard. The fifth byte contains standardized status information pertaining to the compensation value.

Assigned compensation values

ℹ The selection is made via: Expert → Sensor → External compensation

Slot	Sub-slot	Compensation value
160	1	Temperature
161		Density

Data structure

Output data of Analog Output

Byte 1	Byte 2	Byte 3	Byte 4	Byte 5
Measured value: floating point number (IEEE 754)				Status [1]

1) Status coding → 78

Failsafe mode

A failsafe mode can be defined for using the compensation values.

If the status is GOOD or UNCERTAIN, the compensation values transmitted by the automation system are used. If the status is BAD, the failsafe mode is activated for the use of the compensation values.

Parameters are available per compensation value to define the failsafe mode: Expert → Sensor → External compensation

Fail safe type parameter

- Fail safe value option: The value defined in the Fail safe value parameter is used.
- Fallback value option: The last valid value is used.
- Off option: The failsafe mode is disabled.

Fail safe value parameter

Use this parameter to enter the compensation value which is used if the Fail safe value option is selected in the Fail safe type parameter.

Binary output module

Transmit binary output values from the automation system to the measuring device.

Binary output values are used by the automation system to enable and disable device functions.

Binary output values cyclically transmit discrete output values, including the status, from the automation system to the measuring device. The discrete output values are transmitted in the first byte. The second byte contains standardised status information pertaining to the output value.

Selection: device function, binary output, slot 210

Slot	Sub-slot	Bit	Device function	Status (meaning)
210	1	0	Start the verification.	A change of status from 0 to 1 starts the Heartbeat Verification [1]
		1	Reserved	
		2	Reserved	
		3	Reserved	
		4	Reserved	
		5	Reserved	

Slot	Sub-slot	Bit	Device function	Status (meaning)
		6	Reserved	
		7	Reserved	

1) Only available with the Heartbeat application package

Selection: device function, binary output, slot 211

Slot	Sub-slot	Bit	Device function	Status (meaning)
211	1	0	Flow override	▪ 0 (disable device function) ▪ 1 (enable device function)
		1	Zero adjust	
		2	Relay output	Relay output value: ▪ 0 ▪ 1
		3	Relay output	
		4	Relay output	
		5	Reserved	
		6	Reserved	
		7	Reserved	

Data structure

Binary Output input data

Byte 1	Byte 2
Binary Output	Status [1) 2)]

1) Status coding → 🗎 78
2) If the status is BAD, the control variable is not adopted.

9.3.3 Status coding

Status	Coding (hex)	Meaning
BAD - Maintenance alarm	0x24 to 0x27	A measured value is not available because a device error has occurred.
BAD - Process related	0x28 to 0x2B	A measured value is not available because the process conditions are not within the device's technical specification limits.
BAD - Function check	0x3C to 0x03F	A function check is active (e.g. cleaning or calibration)
UNCERTAIN - Initial value	0x4F to 0x4F	A predefined value is output until a correct measured value is available again or corrective measures have been performed that change this status.
UNCERTAIN - Maintenance demanded	0x68 to 0x6B	Signs of wear and tear have been detected on the measuring instrument. Short-term maintenance is needed to ensure that the measuring instrument remains operational. The measured value might be invalid. The use of the measured value depends on the application.
UNCERTAIN - Process related	0x78 to 0x7B	The process conditions are not within the device's technical specification limits. This could have a negative impact on the quality and accuracy of the measured value. The use of the measured value depends on the application.
GOOD - OK	0x80 to 0x83	No error has been diagnosed.

Status	Coding (hex)	Meaning
GOOD - Maintenance required	0xA4 to 0xA7	The measured value is valid. Maintenance of the device due in the near future.
GOOD - Maintenance demanded	0xA8 to 0xAB	The measured value is valid. It is highly advisable to service the device in the near future.
GOOD - Function check	0xBC to 0XBF	The measured value is valid. The measuring instrument is performing an internal function check. The function check does not have any noticeable effect on the process.

9.3.4 Factory setting

The slots are already assigned in the automation system for initial commissioning.

Assigned slots

Slot	Factory setting
1	Volume flow
2	Volume
20 to 26	–
70 to 71	–
80 to 81	–
160 to 161	–
210 to 211	–

9.4 System redundancy S2

For system-redundant operation in a continuous process, two mutually synchronized automation systems are required. If one system fails the second system guarantees continued, uninterrupted operation. The measuring instrument supports S2 system redundancy and can communicate with both automation systems simultaneously.

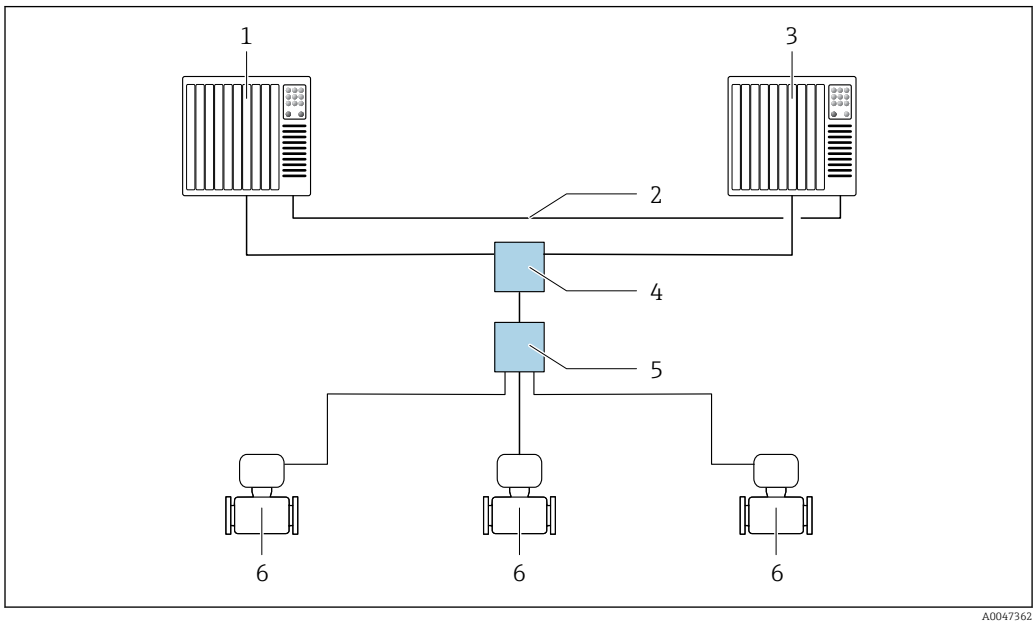

22 Example of the layout of a redundant system (S2): star topology

1 *Automation system 1*
2 *Synchronization of automation systems*
3 *Automation system 2*
4 *Industrial Ethernet Managed Switch*
5 *APL field switch*
6 *Measuring instrument*

All the devices in the network must support S2 system redundancy.

10 Commissioning

10.1 Post-installation and post-connection check

Before commissioning the device:

- Make sure that the post-installation and post-connection checks have been performed successfully.

- Checklist for "Post-installation" check→ 📄 28
- Checklist for "Post-connection" check→ 📄 43

10.2 Switching on the measuring instrument

- Switch on the device upon successful completion of the post-mounting and post-connection check.
  - ↳ After a successful startup, the local display switches automatically from the startup display to the operational display.

If nothing appears on the local display or if a diagnostic message is displayed, refer to the section on "Diagnostics and troubleshooting" → 📄 136.

10.3 Connecting via FieldCare

- For connecting FieldCare → 📄 66
- For connecting via FieldCare
- For user interface of FieldCare

10.4 Setting the operating language

Factory setting: English or ordered local language

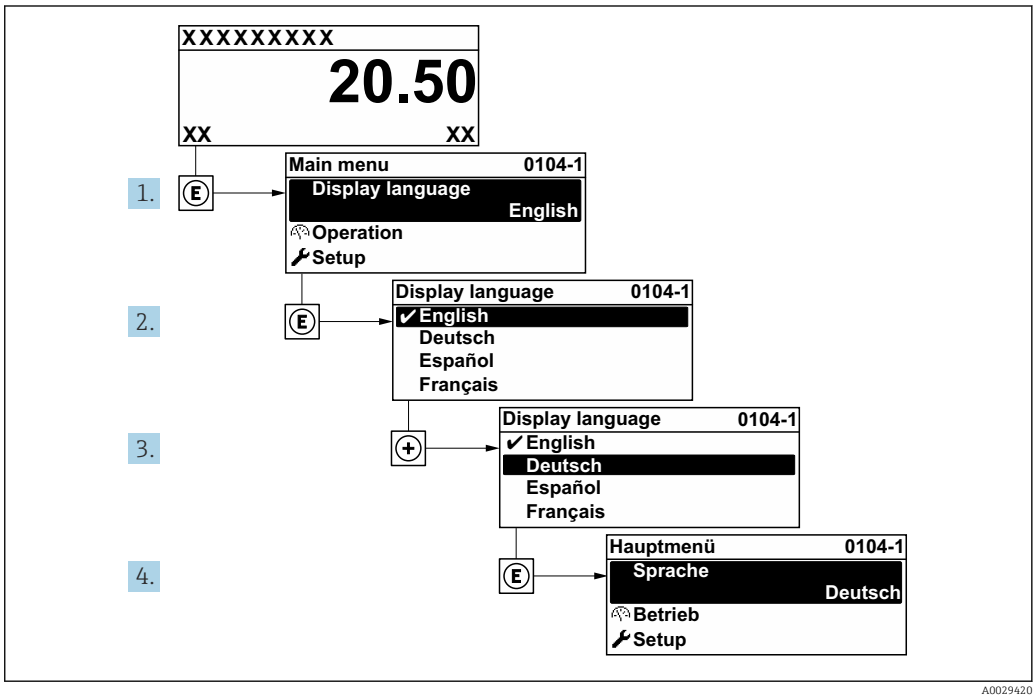

23 Taking the example of the local display

10.5 Configuring the device

The **Setup** menu with its guided wizards contains all the parameters needed for standard operation.

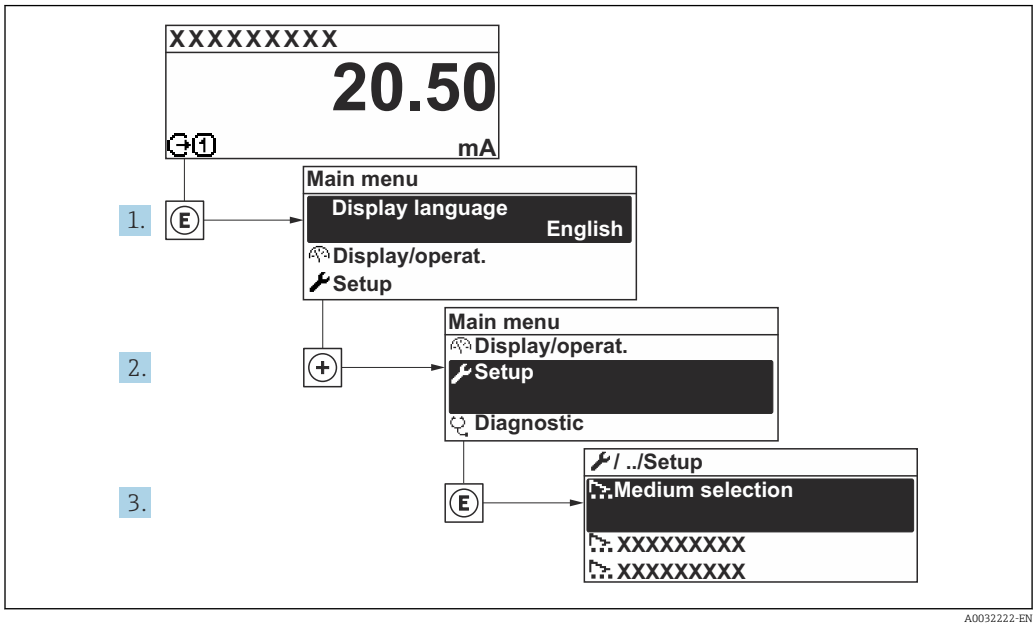

24 *Navigation to the "Setup" menu using the example of the local display*

The number of submenus and parameters can vary depending on the device version. Certain submenus and parameters in these submenus are not described in the Operating Instructions. Instead a description is provided in the Special Documentation for the device ("Supplementary documentation").

Navigation

"Setup" menu → Device tag

Setup	
▶ Communication	→ 83
▶ System units	→ 85
▶ I/O configuration	→ 86
▶ Current input 1 to n	→ 87
▶ Status input 1 to n	→ 89
▶ Current output 1 to n	→ 89
▶ Pulse/frequency/switch output 1 to n	→ 93
▶ Relay output 1 to n	→ 97

▶ Low flow cut off	→ 📄 102
▶ Empty pipe detection	→ 📄 104
▶ Configure flow damping	→ 📄 105
▶ Advanced setup	→ 📄 107

Parameter overview with brief description

Parameter	Description	User entry	Factory setting
Device tag	Enter the name for the measuring point.	Character string comprising numbers, letters and special characters (32)	Promass

10.5.1 Displaying the communication interface

The **Communication** submenu shows all the current parameter settings for selecting and configuring the communication interface.

Navigation

"Setup" menu → Communication

▶ Communication	
▶ APL port	→ 📄 84
▶ Network diagnostics	→ 📄 84

Parameter overview with brief description

Parameter	Description	Selection	Factory setting
Byte order	Select byte transmission sequence.	▪ 0-1-2-3 ▪ 3-2-1-0 ▪ 1-0-3-2 ▪ 2-3-0-1	1-0-3-2
Failure mode	Select measured value output behavior when a diagnostic message occurs via Modbus communication.	▪ NaN value ▪ Last valid value	NaN value
Fieldbus write access	Select access method to the measuring device via fieldbus.	▪ Read + write ▪ Read only	Read + write

"APL port" submenu

Navigation

"Setup" menu → Communication → APL port

▶ **APL port**

IP address	→ 📄 84
Subnet mask	→ 📄 84
Default gateway	→ 📄 84
MAC address	→ 📄 84

Parameter overview with brief description

Parameter	Description	User entry / User interface / Selection	Factory setting
IP address	Enter the IP address of the measuring device.	Character string comprising numbers, letters and special characters (15)	0.0.0.0
Subnet mask	Enter subnet mask of the measuring device.	Character string comprising numbers, letters and special characters (15)	255.255.255.0
Default gateway	Enter IP address for the default gateway of the measuring device.	Character string comprising numbers, letters and special characters (15)	0.0.0.0
MAC address	Shows the MAC address of the measuring device.	Character string comprising numbers, letters and special characters	
DHCP client	Switch the DHCP client functionality on and off.	▪ Off ▪ On	On

"Network diagnostics" submenu

Navigation

"Setup" menu → Communication → Network diagnostics

▶ **Network diagnostics**

Number of failed received packets	→ 📄 85

Parameter overview with brief description

Parameter	Description	User interface / User entry / Selection	Factory setting
Signal to noise ratio	Shows the signal to noise ratio of the Ethernet-APL connection. A value >21dB is good and >23dB is excellent.	Signed floating-point number	0 dB
Number of failed received packets	Shows the number of failed received packets.	0 to 65 535	0
Maximum number of TCP connections	Select the maximum number of concurrent TCP connections allowed.	1 to 4	4
TCP connection request rejection	Indicate how incoming TCP connection requests should be handled when the maximum number of connections has been established.	▪ Close inactive ▪ Close oldest ▪ Reject	Close inactive
Inactivity timeout	Enter the amount of time until an inactive connection is closed automatically	0 to 99 s	60 s

10.5.2 Setting the system units

In the **System units** submenu the units of all the measured values can be set.

The number of submenus and parameters can vary depending on the device version. Certain submenus and parameters in these submenus are not described in the Operating Instructions. Instead a description is provided in the Special Documentation for the device ("Supplementary documentation").

Navigation
"Setup" menu → System units

▶ System units	
Volume flow unit	→ 📄 86
Volume unit	→ 📄 86
Conductivity unit	→ 📄 86
Temperature unit	→ 📄 86
Mass flow unit	→ 📄 86
Mass unit	→ 📄 86
Density unit	→ 📄 86
Corrected volume flow unit	→ 📄 86
Corrected volume unit	→ 📄 86

Parameter overview with brief description

Parameter	Prerequisite	Description	Selection	Factory setting
Volume flow unit	–	Select volume flow unit. *Effect* The selected unit applies to: ▪ Output ▪ Low flow cut off ▪ Simulation process variable	Unit choose list	Country-specific: ▪ l/h ▪ gal/min (us)
Volume unit	–	Select volume unit.	Unit choose list	Country-specific: ▪ m^3 ▪ gal (us)
Conductivity unit	The **On** option is selected in the **Conductivity measurement** parameter.	Select conductivity unit. *Effect* The selected unit applies to: Simulation process variable	Unit choose list	µS/cm
Temperature unit	–	Select temperature unit. *Effect* The selected unit applies to: ▪ **Temperature** parameter ▪ **Maximum value** parameter ▪ **Minimum value** parameter ▪ **External temperature** parameter ▪ **Maximum value** parameter ▪ **Minimum value** parameter	Unit choose list	Country-specific: ▪ °C ▪ °F
Mass flow unit	–	Select mass flow unit. *Effect* The selected unit applies to: ▪ Output ▪ Low flow cut off ▪ Simulation process variable	Unit choose list	Country-specific: ▪ kg/h ▪ lb/min
Mass unit	–	Select mass unit.	Unit choose list	Country-specific: ▪ kg ▪ lb
Density unit	–	Select density unit. *Effect* The selected unit applies to: ▪ Output ▪ Simulation process variable	Unit choose list	Country-specific: ▪ kg/l ▪ lb/ft^3
Corrected volume flow unit	–	Select corrected volume flow unit. *Effect* The selected unit applies to: **Corrected volume flow** parameter (→ 🗎 127)	Unit choose list	Country-specific: ▪ Nl/h ▪ Sft^3/h
Corrected volume unit	–	Select corrected volume unit.	Unit choose list	Country-specific: ▪ Nm^3 ▪ Sft^3

10.5.3 Displaying the I/O configuration

The **I/O configuration** submenu guides the user systematically through all the parameters in which the configuration of the I/O modules is displayed.

Navigation
"Setup" menu → I/O configuration

▶ I/O configuration	
I/O module 1 to n terminal numbers	→ 📄 87
I/O module 1 to n information	→ 📄 87
I/O module 1 to n type	→ 📄 87
Apply I/O configuration	→ 📄 87
I/O alteration code	→ 📄 87

Parameter overview with brief description

Parameter	Description	User interface / Selection / User entry	Factory setting
I/O module 1 to n terminal numbers	Shows the terminal numbers used by the I/O module.	▪ Not used ▪ 26-27 (I/O 1) ▪ 24-25 (I/O 2) ▪ 22-23 (I/O 3)	–
I/O module 1 to n information	Shows information of the plugged I/O module.	▪ Not plugged ▪ Invalid ▪ Not configurable ▪ Configurable ▪ PROFINET	–
I/O module 1 to n type	Shows the I/O module type.	▪ Off ▪ Current output * ▪ Current input * ▪ Status input * ▪ Pulse/frequency/switch output * ▪ Double pulse output * ▪ Relay output *	Off
Apply I/O configuration	Apply parameterization of the freely configurable I/O module.	▪ No ▪ Yes	No
I/O alteration code	Enter the code in order to change the I/O configuration.	Positive integer	0

* Visibility depends on order options or device settings

10.5.4 Configuring the current input

The **"Current input" wizard** guides the user systematically through all the parameters that have to be set for configuring the current input.

Navigation
"Setup" menu → Current input 1 to n

▶ Current input 1 to n

Current span	→ 88
Terminal number	→ 88
Signal mode	→ 88
Terminal number	→ 88
0/4 mA value	→ 88
20 mA value	→ 88
Failure mode	→ 88
Terminal number	→ 88
Failure value	→ 88
Terminal number	→ 88

Parameter overview with brief description

Parameter	Prerequisite	Description	Selection / User interface / User entry	Factory setting
Current span	–	Select current range for process value output and upper/lower level for alarm signal.	▪ 4...20 mA (4...20.5 mA) ▪ 4...20 mA NE (3.8...20.5 mA) ▪ 4...20 mA US (3.9...20.8 mA) ▪ 0...20 mA (0...20.5 mA)	4...20 mA NE (3.8...20.5 mA)
Terminal number	–	Shows the terminal numbers used by the current input module.	▪ Not used ▪ 24-25 (I/O 2) ▪ 22-23 (I/O 3)	–
Signal mode	The measuring device is **not** approved for use in the hazardous area with type of protection Ex-i.	Select the signal mode for the current input.	▪ Passive ▪ Active *	Active
0/4 mA value	–	Enter 4 mA value.	Signed floating-point number	0
20 mA value	–	Enter 20 mA value.	Signed floating-point number	Depends on country and nominal diameter
Failure mode	–	Define input behavior in alarm condition.	▪ Alarm ▪ Last valid value ▪ Defined value	Alarm
Failure value	In the **Failure mode** parameter, the **Defined value** option is selected.	Enter value to be used by the device if input value from external device is missing.	Signed floating-point number	0

* Visibility depends on order options or device settings

10.5.5 Configuring the status input

The **Status input** submenu guides the user systematically through all the parameters that have to be set for configuring the status input.

Navigation
"Setup" menu → Status input 1 to n

▶ **Status input 1 to n**		
	Assign status input	→ 📄 89
	Terminal number	→ 📄 89
	Active level	→ 📄 89
	Terminal number	→ 📄 89
	Response time status input	→ 📄 89
	Terminal number	→ 📄 89

Parameter overview with brief description

Parameter	Description	Selection / User interface / User entry	Factory setting
Assign status input	Select function for the status input.	▪ Off ▪ Reset totalizer 1 ▪ Reset totalizer 2 ▪ Reset totalizer 3 ▪ Reset all totalizers ▪ Flow override ▪ Zero adjustment	Off
Terminal number	Shows the terminal numbers used by the status input module.	▪ Not used ▪ 24-25 (I/O 2) ▪ 22-23 (I/O 3)	–
Active level	Define input signal level at which the assigned function is triggered.	▪ High ▪ Low	High
Response time status input	Define the minimum amount of time the input signal level must be present before the selected function is triggered.	5 to 200 ms	50 ms

10.5.6 Configuring the current output

The **Current output** wizard guides you systematically through all the parameters that have to be set for configuring the current output.

Navigation
"Setup" menu → Current output

▶ **Current output 1 to n**

Process variable current output	→ 91
Terminal number	→ 91
Current range output	→ 91
Terminal number	→ 91
Signal mode	→ 91
Terminal number	→ 91
Lower range value output	→ 91
Upper range value output	→ 91
Fixed current	→ 91
Terminal number	→ 91
Damping current output	→ 92
Failure behavior current output	→ 92
Terminal number	→ 91
Failure current	→ 92
Terminal number	→ 91

Parameter overview with brief description

Parameter	Prerequisite	Description	Selection / User interface / User entry	Factory setting
Process variable current output	–	Select the process variable for the current output.	▪ Off ▪ Volume flow ▪ Mass flow ▪ Corrected volume flow ▪ Flow velocity ▪ Conductivity ▪ Corrected conductivity * ▪ Temperature * ▪ Electronics temperature ▪ Noise * ▪ Coil current shot time * ▪ Reference electrode potential against PE * ▪ HBSI * ▪ Build-up index * ▪ Test point 1 ▪ Test point 2 ▪ Test point 3	Volume flow
Terminal number	–	Shows the terminal numbers used by the current output module.	▪ Not used ▪ 26-27 (I/O 1) ▪ 24-25 (I/O 2) ▪ 22-23 (I/O 3)	–
Current range output	–	Select current range for process value output and upper/lower level for alarm signal.	▪ 4...20 mA NE (3.8...20.5 mA) ▪ 4...20 mA US (3.9...20.8 mA) ▪ 4...20 mA (4... 20.5 mA) ▪ 0...20 mA (0... 20.5 mA) ▪ Fixed value	Depends on country: ▪ 4...20 mA NE (3.8...20.5 mA) ▪ 4...20 mA US (3.9...20.8 mA)
Signal mode	–	Select the signal mode for the current output.	▪ Active * ▪ Passive *	Active
Lower range value output	In **Current span** parameter (→ 🗎 91), one of the following options is selected: ▪ 4...20 mA NE (3.8...20.5 mA) ▪ 4...20 mA US (3.9...20.8 mA) ▪ 4...20 mA (4... 20.5 mA) ▪ 0...20 mA (0... 20.5 mA)	Enter lower range value for the measured value range.	Signed floating-point number	Depends on country: ▪ 0 l/h ▪ 0 gal/min (us)
Upper range value output	In **Current span** parameter (→ 🗎 91), one of the following options is selected: ▪ 4...20 mA NE (3.8...20.5 mA) ▪ 4...20 mA US (3.9...20.8 mA) ▪ 4...20 mA (4... 20.5 mA) ▪ 0...20 mA (0... 20.5 mA)	Enter upper range value for the measured value range.	Signed floating-point number	Depends on country and nominal diameter
Fixed current	The **Fixed current** option is selected in the **Current span** parameter (→ 🗎 91).	Defines the fixed output current.	0 to 22.5 mA	22.5 mA

Parameter	Prerequisite	Description	Selection / User interface / User entry	Factory setting
Damping current output	A process variable is selected in the **Assign current output** parameter (→ 🗎 91) and one of the following options is selected in the **Current span** parameter (→ 🗎 91): ▪ 4...20 mA NE (3.8...20.5 mA) ▪ 4...20 mA US (3.9...20.8 mA) ▪ 4...20 mA (4... 20.5 mA) ▪ 0...20 mA (0... 20.5 mA)	Set reaction time for output signal to fluctuations in the measured value.	0.0 to 999.9 s	1.0 s
Failure behavior current output	A process variable is selected in the **Assign current output** parameter (→ 🗎 91) and one of the following options is selected in the **Current span** parameter (→ 🗎 91): ▪ 4...20 mA NE (3.8...20.5 mA) ▪ 4...20 mA US (3.9...20.8 mA) ▪ 4...20 mA (4... 20.5 mA) ▪ 0...20 mA (0... 20.5 mA)	Define output behavior in alarm condition.	▪ Min. ▪ Max. ▪ Last valid value ▪ Actual value ▪ Fixed value	Max.
Failure current	The **Defined value** option is selected in the **Failure mode** parameter.	Enter current output value in alarm condition.	0 to 22.5 mA	22.5 mA

* Visibility depends on order options or device settings

10.5.7 "Pulse/frequency/switch output 1 to n" wizard

The **Pulse/frequency/switch output** wizard guides you systematically through all the parameters that can be set for configuring the selected output type.

Navigation
"Setup" menu → Pulse/frequency/switch output 1 to n

▶ **Pulse/frequency/switch output 1 to n**	
Operating mode	→ 📄 94
Terminal number	→ 📄 94
Signal mode	→ 📄 94
Assign pulse output	→ 📄 94
Assign frequency output	→ 📄 94
Switch output function	→ 📄 95
Assign diagnostic behavior	→ 📄 95
Assign limit	→ 📄 95
Assign flow direction check	→ 📄 95
Assign status	→ 📄 95
Pulse scaling	→ 📄 95
Pulse width	→ 📄 95
Failure mode	→ 📄 95
Minimum frequency value	→ 📄 96
Maximum frequency value	→ 📄 96
Measuring value at minimum frequency	→ 📄 96
Measuring value at maximum frequency	→ 📄 96
Output damping	→ 📄 96
Failure mode	→ 📄 96

Failure frequency	→ 🗎 96
Switch-on value	→ 🗎 96
Switch-off value	→ 🗎 97
Switch-on delay	→ 🗎 97
Switch-off delay	→ 🗎 97
Failure mode	→ 🗎 97
Invert output signal	→ 🗎 97

Parameter overview with brief description

Parameter	Prerequisite	Description	Selection / User interface / User entry	Factory setting
Operating mode	–	Define the output as a pulse, frequency or switch output.	▪ Pulse ▪ Frequency ▪ Switch	Pulse
Terminal number	–	Shows the terminal numbers used by the PFS output module.	▪ Not used ▪ 24-25 (I/O 2) ▪ 22-23 (I/O 3)	–
Signal mode	–	Select the signal mode for the PFS output.	▪ Passive ▪ Active * ▪ Passive NE	Passive
Assign pulse output	The **Pulse** option is selected in **Operating mode** parameter.	Select process variable for pulse output.	▪ Off ▪ Volume flow ▪ Mass flow ▪ Corrected volume flow	Off
Assign frequency output	The **Frequency** option is selected in **Operating mode** parameter (→ 🗎 94).	Select process variable for frequency output.	▪ Off ▪ Volume flow ▪ Mass flow ▪ Corrected volume flow ▪ Flow velocity ▪ Conductivity * ▪ Corrected conductivity * ▪ Temperature * ▪ Electronics temperature ▪ Noise * ▪ Coil current shot time * ▪ Reference electrode potential against PE * ▪ HBSI * ▪ Build-up index * ▪ Test point 1 ▪ Test point 2 ▪ Test point 3	Off

Parameter	Prerequisite	Description	Selection / User interface / User entry	Factory setting
Switch output function	The **Switch** option is selected in the **Operating mode** parameter.	Select function for switch output.	▪ Off ▪ On ▪ Diagnostic behavior ▪ Limit ▪ Flow direction check ▪ Status	Off
Assign diagnostic behavior	–	Select diagnostic behavior for switch output.	▪ Alarm ▪ Alarm or warning ▪ Warning	Alarm
Assign limit	▪ The **Switch** option is selected in **Operating mode** parameter. ▪ The **Limit** option is selected in **Switch output function** parameter.	Select process variable for limit function.	▪ Off ▪ Volume flow ▪ Mass flow ▪ Corrected volume flow ▪ Flow velocity ▪ Conductivity * ▪ Corrected conductivity * ▪ Temperature * ▪ Electronics temperature ▪ Totalizer 1 ▪ Totalizer 2 ▪ Totalizer 3	Volume flow
Assign flow direction check	▪ The **Switch** option is selected in the **Operating mode** parameter. ▪ The **Flow direction check** option is selected in the **Switch output function** parameter.	Select process variable for flow direction monitoring.		Volume flow
Assign status	▪ The **Switch** option is selected in **Operating mode** parameter. ▪ The **Status** option is selected in **Switch output function** parameter.	Select device status for switch output.	▪ Empty pipe detection ▪ Low flow cut off ▪ Binary output * ▪ Binary output * ▪ Binary output * ▪ Build-up index * ▪ HBSI limit exceeded *	Empty pipe detection
Pulse scaling	The **Pulse** option is selected in the **Operating mode** parameter (→ 🗎 94) and a process variable is selected in the **Assign pulse output** parameter (→ 🗎 94).	Enter quantity for measured value at which a pulse is output.	Positive floating point number	Depends on country and nominal diameter
Pulse width	The **Pulse** option is selected in the **Operating mode** parameter (→ 🗎 94) and a process variable is selected in the **Assign pulse output** parameter (→ 🗎 94).	Define time width of the output pulse.	0.05 to 2 000 ms	100 ms
Failure mode	The **Pulse** option is selected in the **Operating mode** parameter (→ 🗎 94) and a process variable is selected in the **Assign pulse output** parameter (→ 🗎 94).	Define output behavior in alarm condition.	▪ Actual value ▪ No pulses	No pulses

Parameter	Prerequisite	Description	Selection / User interface / User entry	Factory setting
Minimum frequency value	The **Frequency** option is selected in the **Operating mode** parameter (→ 🗎 94) and a process variable is selected in the **Assign frequency output** parameter (→ 🗎 94).	Enter minimum frequency.	0.0 to 10 000.0 Hz	0.0 Hz
Maximum frequency value	The **Frequency** option is selected in the **Operating mode** parameter (→ 🗎 94) and a process variable is selected in the **Assign frequency output** parameter (→ 🗎 94).	Enter maximum frequency.	0.0 to 10 000.0 Hz	10 000.0 Hz
Measuring value at minimum frequency	The **Frequency** option is selected in the **Operating mode** parameter (→ 🗎 94) and a process variable is selected in the **Assign frequency output** parameter (→ 🗎 94).	Enter measured value for minimum frequency.	Signed floating-point number	Depends on country and nominal diameter
Measuring value at maximum frequency	The **Frequency** option is selected in the **Operating mode** parameter (→ 🗎 94) and a process variable is selected in the **Assign frequency output** parameter (→ 🗎 94).	Enter measured value for maximum frequency.	Signed floating-point number	Depends on country and nominal diameter
Damping output	One of the following options is selected in the **Assign current output** parameter (→ 🗎 91): ▪ Volume flow ▪ Mass flow ▪ Corrected volume flow ▪ Flow velocity ▪ Conductivity * ▪ Corrected conductivity * ▪ Temperature * ▪ Electronics temperature	Set reaction time for output signal to fluctuations in the measured value.	0 to 999.9 s	0.0 s
Failure mode	The **Frequency** option is selected in the **Operating mode** parameter (→ 🗎 94) and a process variable is selected in the **Assign frequency output** parameter (→ 🗎 94).	Define output behavior in alarm condition.	▪ Actual value ▪ Defined value ▪ 0 Hz	0 Hz
Failure frequency	In the **Operating mode** parameter (→ 🗎 94), the **Frequency** option is selected, in the **Assign frequency output** parameter (→ 🗎 94) a process variable is selected, and in the **Failure mode** parameter, the **Defined value** option is selected.	Enter frequency output value in alarm condition.	0.0 to 12 500.0 Hz	0.0 Hz
Switch-on value	▪ The **Switch** option is selected in the **Operating mode** parameter. ▪ The **Limit** option is selected in the **Switch output function** parameter.	Enter measured value for the switch-on point.	Signed floating-point number	Depends on country: ▪ 0 l/h ▪ 0 gal/min (us)

Parameter	Prerequisite	Description	Selection / User interface / User entry	Factory setting
Switch-off value	▪ The **Switch** option is selected in the **Operating mode** parameter. ▪ The **Limit** option is selected in the **Switch output function** parameter.	Enter measured value for the switch-off point.	Signed floating-point number	Depends on country: ▪ 0 l/h ▪ 0 gal/min (us)
Switch-on delay	–	Define delay for the switch-on of status output.	0.0 to 100.0 s	0.0 s
Switch-off delay	–	Define delay for the switch-off of status output.	0.0 to 100.0 s	0.0 s
Failure mode	–	Define output behavior in alarm condition.	▪ Actual status ▪ Open ▪ Closed	Open
Invert output signal	–	Invert the output signal.	▪ No ▪ Yes	No

* Visibility depends on order options or device settings

10.5.8 Configuring the relay output

The **Relay output** wizard guides the user systematically through all the parameters that have to be set for configuring the relay output.

Navigation
"Setup" menu → Relay output 1 to n

▶ **Relay output 1 to n**

Relay output function	→ 📄 98
Terminal number	→ 📄 98
Assign flow direction check	→ 📄 98
Terminal number	→ 📄 98
Assign limit	→ 📄 98
Terminal number	→ 📄 98
Assign diagnostic behavior	→ 📄 98
Terminal number	→ 📄 98
Assign status	→ 📄 98
Terminal number	→ 📄 98
Switch-off value	→ 📄 98

Switch-off delay	→ 📄 99
Switch-on value	→ 📄 99
Switch-on delay	→ 📄 99
Failure mode	→ 📄 99
Terminal number	→ 📄 98

Parameter overview with brief description

Parameter	Prerequisite	Description	Selection / User interface / User entry	Factory setting
Relay output function	–	Select the function for the relay output.	▪ Closed ▪ Open ▪ Diagnostic behavior ▪ Limit ▪ Flow direction check ▪ Status	Closed
Terminal number	–	Shows the terminal numbers used by the relay output module.	▪ Not used ▪ 24-25 (I/O 2) ▪ 22-23 (I/O 3)	–
Assign flow direction check	The **Flow direction check** option is selected in the **Relay output function** parameter.	Select process variable for flow direction monitoring.		Volume flow
Assign limit	The **Limit** option is selected in **Relay output function** parameter.	Select process variable for limit function.	▪ Off ▪ Volume flow ▪ Mass flow ▪ Corrected volume flow ▪ Flow velocity ▪ Conductivity * ▪ Corrected conductivity * ▪ Temperature * ▪ Electronics temperature ▪ Totalizer 1 ▪ Totalizer 2 ▪ Totalizer 3	Volume flow
Assign diagnostic behavior	In the **Relay output function** parameter, the **Diagnostic behavior** option is selected.	Select diagnostic behavior for switch output.	▪ Alarm ▪ Alarm or warning ▪ Warning	Alarm
Assign status	In the **Relay output function** parameter, the **Digital Output** option is selected.	Select device status for switch output.	▪ Empty pipe detection ▪ Low flow cut off ▪ Binary output * ▪ Binary output * ▪ Binary output * ▪ HBSI limit exceeded *	Empty pipe detection
Switch-off value	The **Limit** option is selected in the **Relay output function** parameter.	Enter measured value for the switch-off point.	Signed floating-point number	Depends on country: ▪ 0 l/h ▪ 0 gal(us)/min

Parameter	Prerequisite	Description	Selection / User interface / User entry	Factory setting
Switch-off delay	In the **Relay output function** parameter, the **Limit** option is selected.	Define delay for the switch-off of status output.	0.0 to 100.0 s	0.0 s
Switch-on value	The **Limit** option is selected in the **Relay output function** parameter.	Enter measured value for the switch-on point.	Signed floating-point number	Depends on country: ▪ 0 l/h ▪ 0 gal(us)/min
Switch-on delay	In the **Relay output function** parameter, the **Limit** option is selected.	Define delay for the switch-on of status output.	0.0 to 100.0 s	0.0 s
Failure mode	–	Define output behavior in alarm condition.	▪ Actual status ▪ Open ▪ Closed	Open
Switch state	–	Shows the current relay switch status.	▪ Open ▪ Closed	–

* Visibility depends on order options or device settings

10.5.9 Configuring the double pulse output

The **Double pulse output** submenu guides the user systematically through all the parameters that have to be set for configuring the double pulse output.

Navigation
"Setup" menu → Double pulse output

▶ **Double pulse output**	
Signal mode	→ 📄 100
Master terminal number	→ 📄 100
Assign pulse output	→ 📄 100
Measuring mode	→ 📄 100
Value per pulse	→ 📄 100
Pulse width	→ 📄 100
Failure mode	→ 📄 100
Invert output signal	→ 📄 100

Parameter overview with brief description

Parameter	Description	Selection / User interface / User entry	Factory setting
Signal mode	Select the signal mode for the double pulse output.	▪ Passive ▪ Active ▪ Passive NAMUR	Passive
Master terminal number	Shows the terminal numbers used by the master of the double pulse output module.	▪ Not used ▪ 24-25 (I/O 2) ▪ 22-23 (I/O 3)	–
Assign pulse output 1	Select process variable for pulse output.	▪ Off ▪ Mass flow ▪ Volume flow ▪ Corrected volume flow ▪ Target mass flow ▪ Carrier mass flow	Off
Measuring mode	Select measuring mode for pulse output.	▪ Forward flow ▪ Forward/Reverse flow ▪ Reverse flow ▪ Reverse flow compensation	Forward flow
Value per pulse	Enter measured value at which a pulse is output.	Signed floating-point number	Depends on country and nominal diameter
Pulse width	Define time width of the output pulse.	0.5 to 2 000 ms	0.5 ms
Failure mode	Define output behavior in alarm condition.	▪ Actual value ▪ No pulses	No pulses
Invert output signal	Invert the output signal.	▪ No ▪ Yes	No

10.5.10 Configuring the local display

The **Display** wizard guides you systematically through all the parameters that can configured for configuring the local display.

Navigation

"Setup" menu → Display

▶ **Display**

Format display	→ 📄 101
Value 1 display	→ 📄 101
0% bargraph value 1	→ 📄 101
100% bargraph value 1	→ 📄 101
Value 2 display	→ 📄 101
Value 3 display	→ 📄 101
0% bargraph value 3	→ 📄 101

100% bargraph value 3	→ 🗎 102
Value 4 display	→ 🗎 102

Parameter overview with brief description

Parameter	Prerequisite	Description	Selection / User entry	Factory setting
Format display	A local display is provided.	Select how measured values are shown on the display.	▪ 1 value, max. size ▪ 1 bargraph + 1 value ▪ 2 values ▪ 1 value large + 2 values ▪ 4 values	1 value, max. size
Value 1 display	A local display is provided.	Select the measured value that is shown on the local display.	▪ Volume flow ▪ Mass flow ▪ Corrected volume flow ▪ Flow velocity ▪ Corrected conductivity * ▪ Totalizer 1 ▪ Totalizer 2 ▪ Totalizer 3 ▪ Current output 1 * ▪ Current output 2 * ▪ Current output 3 * ▪ Current output 4 * ▪ Temperature * ▪ Electronics temperature ▪ HBSI * ▪ Noise * ▪ Coil current shot time * ▪ Reference electrode potential against PE * ▪ Build-up index * ▪ Test point 1 ▪ Test point 2 ▪ Test point 3	Volume flow
0% bargraph value 1	A local display is provided.	Enter 0% value for bar graph display.	Signed floating-point number	Country-specific: ▪ 0 l/h ▪ 0 gal/min (us)
100% bargraph value 1	A local display is provided.	Enter 100% value for bar graph display.	Signed floating-point number	Depends on country and nominal diameter
Value 2 display	A local display is provided.	Select the measured value that is shown on the local display.	For the picklist, see **Value 1 display** parameter (→ 🗎 101)	None
Value 3 display	A local display is provided.	Select the measured value that is shown on the local display.	For the picklist, see **Value 1 display** parameter (→ 🗎 101)	None
0% bargraph value 3	A selection was made in the **Value 3 display** parameter.	Enter 0% value for bar graph display.	Signed floating-point number	Country-specific: ▪ 0 l/h ▪ 0 gal/min (us)

Parameter	Prerequisite	Description	Selection / User entry	Factory setting
100% bargraph value 3	A selection was made in the **Value 3 display** parameter.	Enter 100% value for bar graph display.	Signed floating-point number	0
Value 4 display	A local display is provided.	Select the measured value that is shown on the local display.	For the picklist, see **Value 1 display** parameter (→ 🗎 101)	None
Display language	A local display is provided.	Set display language.	▪ English ▪ Deutsch ▪ Français ▪ Español ▪ Italiano ▪ Nederlands ▪ Portuguesa ▪ Polski ▪ русский язык (Russian) ▪ Svenska ▪ Türkçe ▪ 中文 (Chinese) ▪ 日本語 (Japanese) ▪ 한국어 (Korean) ▪ tiếng Việt (Vietnamese) ▪ čeština (Czech)	English (alternatively, the ordered language is preset in the device)
Display interval	A local display is provided.	Set time measured values are shown on display if display alternates between values.	1 to 10 s	5 s
Display damping	A local display is provided.	Set display reaction time to fluctuations in the measured value.	0.0 to 999.9 s	0.0 s
Header	A local display is provided.	Select header contents on local display.	▪ Device tag ▪ Free text	Device tag
Header text	The **Free text** option is selected in the **Header** parameter.	Enter display header text.	Max. 12 characters, such as letters, numbers or special characters (e.g. @, %, /)	----------
Separator	A local display is provided.	Select decimal separator for displaying numerical values.	▪ . (point) ▪ , (comma)	. (point)
Backlight	–	Switch the local display backlight on and off.	▪ Disable ▪ Enable	Enable

* Visibility depends on order options or device settings

10.5.11 Configuring the low flow cut off

The **Low flow cut off** wizard systematically guides the user through all the parameters that must be set to configure low flow cut off.

Navigation

"Setup" menu → Low flow cut off

▶ Low flow cut off	
Assign process variable	→ 🗎 103
On value low flow cutoff	→ 🗎 103

Off value low flow cutoff	→ 🗎 103
Pressure shock suppression	→ 🗎 103

Parameter overview with brief description

Parameter	Prerequisite	Description	Selection / User entry	Factory setting
Assign process variable	–	Select process variable for low flow cut off.	▪ Off ▪ Volume flow ▪ Mass flow ▪ Corrected volume flow	Volume flow
On value low flow cutoff	A process variable is selected in the **Assign process variable** parameter (→ 🗎 103).	Enter on value for low flow cut off.	Positive floating-point number	Depends on country and nominal diameter
Off value low flow cutoff	A process variable is selected in the **Assign process variable** parameter (→ 🗎 103).	Enter off value for low flow cut off.	0 to 100.0 %	50 %
Pressure shock suppression	A process variable is selected in the **Assign process variable** parameter (→ 🗎 103).	Enter time frame for signal suppression (= active pressure shock suppression).	0 to 100 s	0 s

10.5.12 Configuring empty pipe detection

The measuring instruments are calibrated with water (approx. 500 µS/cm) at the factory. For liquids with a lower conductivity, it is advisable to perform a new full pipe adjustment on site.

The **Empty pipe detection** submenu contains parameters that must be configured for the configuration of empty pipe detection.

Navigation
"Setup" menu → Empty pipe detection

▶ **Empty pipe detection**	
Empty pipe detection	→ 🗎 104
New adjustment	→ 🗎 104
Progress	→ 🗎 104
Switch point empty pipe detection	→ 🗎 104
Response time empty pipe detection	→ 🗎 104

Parameter overview with brief description

Parameter	Prerequisite	Description	Selection / User interface / User entry	Factory setting
Empty pipe detection	–	Switch empty pipe detection on and off.	▪ Off ▪ On	Off
New adjustment	The **On** option is selected in the **Empty pipe detection** parameter.	Select type of adjustment.	▪ Cancel ▪ Empty pipe adjust ▪ Full pipe adjust	Cancel
Progress	–	Shows the progress of the process.	▪ Ok ▪ Busy ▪ Not ok	Not ok
Switch point empty pipe detection	–	Enter the switch point in % of the difference between the two adjustment values. The lower the percentage, the earlier the pipe is detected as empty.	0 to 100 %	50 %
Response time empty pipe detection	A process variable is selected in the **Assign process variable** parameter (→ 🗎 104).	Use this function to enter the minimum time (hold time) the signal must be present before diagnostic message S962 "Empty pipe" is triggered in the event of a partially filled or empty measuring pipe.	0 to 100 s	1 s

10.5.13 Configuring flow damping

The **Configure flow damping** wizard guides the user systematically through the parameters, depending on the selected scenario:

- Configuration of damping for the application
  To configure flow damping for the specific requirements of the process application.
- Replace old device
  To adopt the flow damping for the new device in the event of a device replacement.
- Restoring factory settings
  To restore the factory settings of all the parameters that are relevant for flow damping.

Navigation
"Setup" menu → Configure flow damping

▶ Configure flow damping	
Scenario	→ 📄 106
Old device	→ 📄 106
CIP filter on	→ 📄 106
Damping level	→ 📄 106
Flow change rate	→ 📄 106
Application	→ 📄 106
Pulsating flow	→ 📄 106
Flow peaks	→ 📄 106
Damping level	→ 📄 106
Filter options	→ 📄 106
Median filter depth	→ 📄 106
Flow damping	→ 📄 106
Support ID	→ 📄 106
Save settings	→ 📄 106

Parameter overview with brief description

Parameter	Description	Selection / User interface	Factory setting
Scenario	Select the applicable scenario.	▪ Replace old device ▪ Configure damping for application ▪ Restore factory settings	Configure damping for application
Old device	Select the measuring device to replace.	▪ Promag 10 (pre-2021) ▪ Promag 50/53 ▪ Promag 55 H	Promag 50/53
CIP filter on	Indicate whether the CIP filter was applied for the device to be replaced.	▪ No ▪ Yes	No
Damping level	Select the degree of damping to apply.	▪ Default ▪ Weak ▪ Strong	Default
Flow change rate	Select the rate at which the flow changes.	▪ Once a day or less ▪ Once an hour or less ▪ Once a minute or less ▪ Once a second or more	Once a minute or less
Application	Select the type of application that applies.	▪ Display flow ▪ Control loop ▪ Totalizing ▪ Batching	Display flow
Pulsating flow	Indicate whether the process is characterized by pulsating flow (e.g. due to a displacement pump).	▪ No ▪ Yes	No
Flow peaks	Select the frequency at which flow interference peaks occur.	▪ Never ▪ Sporadically ▪ Regularly ▪ Continuously	Never
Response Time		▪ Fast ▪ Slow ▪ Normal	Normal
Filter options	Shows the type of flow filter recommended for damping.	▪ Adaptive ▪ Adaptive CIP on ▪ Dynamic ▪ Dynamic CIP on ▪ Binomial ▪ Binomial CIP on	Binomial
Median filter depth	Shows median filter depth recommended for damping.	0 to 255	6
Flow damping	Shows the flow filter depth recommended for damping.	0 to 15	7
Support ID	If the recommended settings are not satisfactory: please contact your Endress +Hauser service organization with the support ID displayed.	0 to 65 535	0
Save settings	Indicate whether to save the recommended settings.	▪ Cancel ▪ Save *	Cancel
Filter Wizard result:		▪ Completed ▪ Aborted	Aborted

* Visibility depends on order options or device settings

10.6 Advanced settings

The **Advanced setup** submenu with its submenus contains parameters for specific settings.

Navigation to the "Advanced setup" submenu

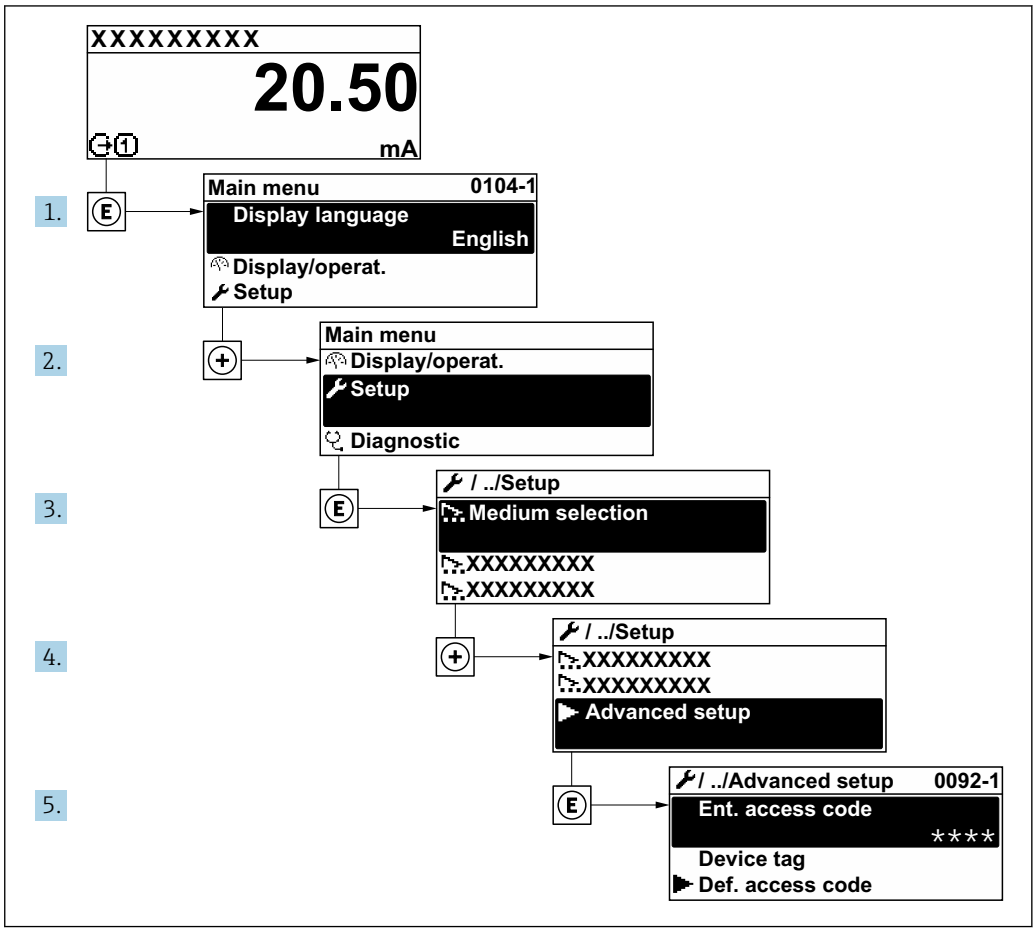

The number of submenus and parameters can vary depending on the device version. Certain submenus and parameters in these submenus are not described in the Operating Instructions. Instead a description is provided in the Special Documentation for the device ("Supplementary documentation").

Navigation

"Setup" menu → Advanced setup

▶ Advanced setup	
Enter access code	→ 📄 108
▶ Sensor adjustment	→ 📄 108
▶ Totalizer 1 to n	→ 📄 108
▶ Display	→ 📄 110

▶ WLAN settings	→ 📄 113
▶ Electrode cleaning cycle	→ 📄 115
▶ Heartbeat setup	→ 📄 116
▶ Configuration backup	→ 📄 117
▶ Administration	→ 📄 118

10.6.1 Using the parameter to enter the access code

Navigation
"Setup" menu → Advanced setup

Parameter overview with brief description

Parameter	Description	User entry
Enter access code	Enter access code to disable write protection of parameters.	Max. 16-digit character string comprising numbers, letters and special characters

10.6.2 Carrying out a sensor adjustment

The **Sensor adjustment** submenu contains parameters that pertain to the functionality of the sensor.

Navigation
"Setup" menu → Advanced setup → Sensor adjustment

▶ Sensor adjustment	
Installation direction	→ 📄 108

Parameter overview with brief description

Parameter	Description	Selection	Factory setting
Installation direction	Select sign of flow direction.	▪ Forward flow ▪ Reverse flow	Forward flow

10.6.3 Configuring the totalizer

In the **"Totalizer 1 to n" submenu**, you can configure the specific totalizer.

Navigation
"Setup" menu → Advanced setup → Totalizer 1 to n

▶ Totalizer 1 to n	
Assign process variable	→ 📄 109
Unit totalizer	→ 📄 109
Totalizer operation mode	→ 📄 109
Failure mode	→ 📄 109

Parameter overview with brief description

Parameter	Description	Selection	Factory setting
Assign process variable	Select process variable for totalizer.	▪ Volume flow ▪ Mass flow ▪ Corrected volume flow	Volume flow
Unit totalizer	Select the unit for the process variable of the totalizer.	Unit choose list	Country-specific: ▪ m^3 ▪ ft^3
Totalizer operation mode	Select totalizer calculation mode.	▪ Net flow total ▪ Forward flow total ▪ Reverse flow total ▪ Last valid value	Net flow total
Failure mode	Define the totalizer behavior in the event of a device alarm.	▪ Stop ▪ Actual value ▪ Last valid value	Actual value

10.6.4 Carrying out additional display configurations

In the **Display** submenu you can set all the parameters associated with the configuration of the local display.

Navigation
"Setup" menu → Advanced setup → Display

▶ Display	
Format display	→ 111
Value 1 display	→ 111
0% bargraph value 1	→ 111
100% bargraph value 1	→ 111
Decimal places 1	→ 111
Value 2 display	→ 111
Decimal places 2	→ 111
Value 3 display	→ 111
0% bargraph value 3	→ 112
100% bargraph value 3	→ 112
Decimal places 3	→ 112
Value 4 display	→ 112
Decimal places 4	→ 112
Display language	→ 112
Display interval	→ 112
Display damping	→ 112
Header	→ 112
Header text	→ 112
Separator	→ 113
Backlight	→ 113

Parameter overview with brief description

Parameter	Prerequisite	Description	Selection / User entry	Factory setting
Format display	A local display is provided.	Select how measured values are shown on the display.	▪ 1 value, max. size ▪ 1 bargraph + 1 value ▪ 2 values ▪ 1 value large + 2 values ▪ 4 values	1 value, max. size
Value 1 display	A local display is provided.	Select the measured value that is shown on the local display.	▪ Volume flow ▪ Mass flow ▪ Corrected volume flow ▪ Flow velocity ▪ Corrected conductivity * ▪ Totalizer 1 ▪ Totalizer 2 ▪ Totalizer 3 ▪ Current output 1 * ▪ Current output 2 * ▪ Current output 3 * ▪ Current output 4 * ▪ Temperature * ▪ Electronics temperature ▪ HBSI * ▪ Noise * ▪ Coil current shot time * ▪ Reference electrode potential against PE * ▪ Build-up index * ▪ Test point 1 ▪ Test point 2 ▪ Test point 3	Volume flow
0% bargraph value 1	A local display is provided.	Enter 0% value for bar graph display.	Signed floating-point number	Country-specific: ▪ 0 l/h ▪ 0 gal/min (us)
100% bargraph value 1	A local display is provided.	Enter 100% value for bar graph display.	Signed floating-point number	Depends on country and nominal diameter
Decimal places 1	A measured value is specified in the **Value 1 display** parameter.	Select the number of decimal places for the display value.	▪ x ▪ x.x ▪ x.xx ▪ x.xxx ▪ x.xxxx	x.xx
Value 2 display	A local display is provided.	Select the measured value that is shown on the local display.	For the picklist, see **Value 1 display** parameter (→ 🗎 101)	None
Decimal places 2	A measured value is specified in the **Value 2 display** parameter.	Select the number of decimal places for the display value.	▪ x ▪ x.x ▪ x.xx ▪ x.xxx ▪ x.xxxx	x.xx
Value 3 display	A local display is provided.	Select the measured value that is shown on the local display.	For the picklist, see **Value 1 display** parameter (→ 🗎 101)	None

Parameter	Prerequisite	Description	Selection / User entry	Factory setting
0% bargraph value 3	A selection was made in the **Value 3 display** parameter.	Enter 0% value for bar graph display.	Signed floating-point number	Country-specific: ▪ 0 l/h ▪ 0 gal/min (us)
100% bargraph value 3	A selection was made in the **Value 3 display** parameter.	Enter 100% value for bar graph display.	Signed floating-point number	0
Decimal places 3	A measured value is specified in the **Value 3 display** parameter.	Select the number of decimal places for the display value.	▪ x ▪ x.x ▪ x.xx ▪ x.xxx ▪ x.xxxx	x.xx
Value 4 display	A local display is provided.	Select the measured value that is shown on the local display.	For the picklist, see **Value 1 display** parameter (→ 🗎 101)	None
Decimal places 4	A measured value is specified in the **Value 4 display** parameter.	Select the number of decimal places for the display value.	▪ x ▪ x.x ▪ x.xx ▪ x.xxx ▪ x.xxxx	x.xx
Display language	A local display is provided.	Set display language.	▪ English ▪ Deutsch ▪ Français ▪ Español ▪ Italiano ▪ Nederlands ▪ Portuguesa ▪ Polski ▪ русский язык (Russian) ▪ Svenska ▪ Türkçe ▪ 中文 (Chinese) ▪ 日本語 (Japanese) ▪ 한국어 (Korean) ▪ tiếng Việt (Vietnamese) ▪ čeština (Czech)	English (alternatively, the ordered language is preset in the device)
Display interval	A local display is provided.	Set time measured values are shown on display if display alternates between values.	1 to 10 s	5 s
Display damping	A local display is provided.	Set display reaction time to fluctuations in the measured value.	0.0 to 999.9 s	0.0 s
Header	A local display is provided.	Select header contents on local display.	▪ Device tag ▪ Free text	Device tag
Header text	The **Free text** option is selected in the **Header** parameter.	Enter display header text.	Max. 12 characters, such as letters, numbers or special characters (e.g. @, %, /)	----------

Parameter	Prerequisite	Description	Selection / User entry	Factory setting
Separator	A local display is provided.	Select decimal separator for displaying numerical values.	▪ . (point) ▪ , (comma)	. (point)
Backlight	One of the following conditions is met: ▪ Order code for "Display; operation", option **F** "4-line, illum.; touch control" ▪ Order code for "Display; operation", option **G** "4-line, illum.; touch control +WLAN" ▪ Order code for "Display; operation", option **O** "Remote display 4-line illuminated; 10m/30ft cable; touch control"	Switch the local display backlight on and off.	▪ Disable ▪ Enable	Enable

* Visibility depends on order options or device settings

10.6.5 WLAN configuration

The **WLAN Settings** submenu guides the user systematically through all the parameters that have to be set for the WLAN configuration.

Navigation
"Setup" menu → Advanced setup → WLAN settings

▶ **WLAN settings**

WLAN	→ 114
WLAN mode	→ 114
SSID name	→ 114
Network security	→ 114
Security identification	→ 114
User name	→ 114
WLAN password	→ 114
WLAN IP address	→ 114
WLAN passphrase	→ 114
Assign SSID name	→ 114
SSID name	→ 114

Connection state	→ 📄 115
Received signal strength	→ 📄 115

Parameter overview with brief description

Parameter	Prerequisite	Description	Selection / User entry / User interface	Factory setting
WLAN	–	Switch WLAN on and off.	▪ Disable ▪ Enable	Enable
WLAN mode	–	Select WLAN mode.	▪ WLAN access point ▪ WLAN Client	WLAN access point
SSID name	The client is activated.	Enter the user-defined SSID name (max. 32 characters).	–	–
Network security	–	Select the security type of the WLAN network.	▪ Unsecured ▪ WPA2-PSK ▪ EAP-PEAP with MSCHAPv2 * ▪ EAP-PEAP MSCHAPv2 no server authentic. * ▪ EAP-TLS *	WPA2-PSK
Security identification	–	Select security settings and download these settings via menu Data management > Security > WLAN.	▪ Trusted issuer certificate ▪ Device certificate ▪ Device private key	–
User name	–	Enter user name.	–	–
WLAN password	–	Enter WLAN password.	–	–
WLAN IP address	–	Enter IP address of the WLAN interface of the device.	4 octet: 0 to 255 (in the particular octet)	192.168.1.212
WLAN passphrase	The **WPA2-PSK** option is selected in the **Security type** parameter.	Enter the network key (8 to 32 characters). ℹ The network key supplied with the device should be changed during commissioning for security reasons.	8 to 32-digit character string comprising numbers, letters and special characters (without spaces)	Serial number of the measuring device (e.g. L100A802000)
Assign SSID name	–	Select which name will be used for SSID: device tag or user-defined name.	▪ Device tag ▪ User-defined	User-defined
SSID name	▪ The **User-defined** option is selected in the **Assign SSID name** parameter. ▪ The **WLAN access point** option is selected in the **WLAN mode** parameter.	Enter the user-defined SSID name (max. 32 characters). ℹ The user-defined SSID name may only be assigned once. If the SSID name is assigned more than once, the devices can interfere with one another.	Max. 32-digit character string comprising numbers, letters and special characters	EH_device designation_last 7 digits of the serial number (e.g. EH_Promag_300_A 802000)

Parameter	Prerequisite	Description	Selection / User entry / User interface	Factory setting
Connection state	–	Displays the connection status.	▪ Connected ▪ Not connected	Not connected
Received signal strength	–	Shows the received signal strength.	▪ Low ▪ Medium ▪ High	High

* Visibility depends on order options or device settings

10.6.6 Performing electrode cleaning

The **Electrode cleaning cycle** submenu contains the parameters that must be set for the configuration of electrode cleaning.

The submenu is only available if the device was ordered with electrode cleaning.

Navigation

"Setup" menu → Advanced setup → Electrode cleaning cycle

▶ **Electrode cleaning cycle**

Electrode cleaning cycle	→ 115
ECC duration	→ 115
ECC recovery time	→ 115
ECC interval	→ 116
ECC polarity	→ 116

Parameter overview with brief description

Parameter	Prerequisite	Description	Selection / User entry / User interface	Factory setting
Electrode cleaning cycle	For the following order code: "Application package", option **EC** "ECC electrode cleaning"	Switch electrode cleaning on or off.	▪ Off ▪ On	On
ECC duration	For the following order code: "Application package", option **EC** "ECC electrode cleaning"	Specify the duration of the cleaning phase of the cycle. Diag. msg. no. 530 is displayed until the cleaning phase and recovery phase are complete.	0.01 to 30 s	2 s
ECC recovery time	For the following order code: "Application package", option **EC** "ECC electrode cleaning"	Specify the maximum timespan after the cleaning phase for recovery before measurement resumes during which the output signal values are frozen.	1 to 600 s	60 s

Parameter	Prerequisite	Description	Selection / User entry / User interface	Factory setting
ECC interval	For the following order code: "Application package", option **EC** "ECC electrode cleaning"	Specify the interval between one cleaning cycle and the next.	0.5 to 168 h	0.5 h
ECC polarity	For the following order code: "Application package", option **EC** "ECC electrode cleaning"	Select the polarity of the electrode cleaning circuit.	▪ Positive ▪ Negative	Depends on the electrode material: ▪ Tantalum: **Negative** option ▪ Platinum, Alloy C22, stainless steel: **Positive** option

10.6.7 Performing Heartbeat basic setup

Heartbeat setup submenu guides the user systematically through all the parameters that can be used for the Heartbeat basic setup.

The wizard only appears if the device has the Heartbeat Verification +Monitoring application package.

Navigation

"Setup" menu → Advanced setup → Heartbeat setup

▶ **Heartbeat setup**	
▶ **Heartbeat base settings**	→ 📄 116

"Heartbeat base settings" submenu

Navigation

"Setup" menu → Advanced setup → Heartbeat setup → Heartbeat base settings

▶ **Heartbeat base settings**	
Plant operator (2754)	→ 📄 117
Location (2755)	→ 📄 117
Partially filled pipe (6465)	→ 📄 117

Parameter overview with brief description

Parameter	Description	User entry / Selection	Factory setting
Plant operator	Enter the plant operator.	Max. 32 characters such as letters, numbers or special characters (e.g. @, %, /)	–
Location	Enter the location.	Max. 32 characters such as letters, numbers or special characters (e.g. @, %, /)	–
Partially filled pipe	Indicate, if the measuring tube is partially filled during the verification process in order to avoid evaluating the EPD electrode cable.	▪ No ▪ Yes	No

10.6.8 Configuration management

After commissioning, you can save the current device configurationor restore the previous device configuration. The device configuration is managed via the **Configuration management** parameter.

Navigation
"Setup" menu → Advanced setup → Configuration backup

▶ **Configuration backup**

Operating time	→ 117
Last backup	→ 117
Configuration management	→ 117
Backup state	→ 118
Comparison result	→ 118

Parameter overview with brief description

Parameter	Description	User interface / Selection	Factory setting
Operating time	Indicates how long the device has been in operation.	Days (d), hours (h), minutes (m) and seconds (s)	–
Last backup	Shows when the last data backup was saved to HistoROM backup.	Days (d), hours (h), minutes (m) and seconds (s)	–
Configuration management	Select action for managing the device data in the HistoROM backup.	▪ Cancel ▪ Execute backup ▪ Restore * ▪ Compare * ▪ Clear backup data	Cancel

Parameter	Description	User interface / Selection	Factory setting
Backup state	Shows the current status of data saving or restoring.	▪ None ▪ Backup in progress ▪ Restoring in progress ▪ Delete in progress ▪ Compare in progress ▪ Restoring failed ▪ Backup failed	None
Comparison result	Comparison of current device data with HistoROM backup.	▪ Settings identical ▪ Settings not identical ▪ No backup available ▪ Backup settings corrupt ▪ Check not done ▪ Dataset incompatible	Check not done

* Visibility depends on order options or device settings

Function range of "Configuration management" parameter

Options	Description
Cancel	No action is executed and the user exits the parameter.
Execute backup	A backup copy of the current device configuration is saved from the HistoROM backup to the memory of the device. The backup copy includes the transmitter data of the device.
Restore	The last backup copy of the device configuration is restored from the display module from the device memory to the device's HistoROM backup. The backup copy includes the transmitter data of the device.
Compare	The device configuration saved in the device memory is compared with the current device configuration of the HistoROM backup.
Clear backup data	The backup copy of the device configuration is deleted from the memory of the device.

HistoROM backup
A HistoROM is a "non-volatile" device memory in the form of an EEPROM.

While this action is in progress, the configuration cannot be edited via the local display and a message on the processing status appears on the display.

10.6.9 Using parameters for device administration

The **Administration** submenu systematically guides the user through all the parameters that can be used for device administration purposes.

Navigation

"Setup" menu → Advanced setup → Administration

▶ **Administration**	
▶ **Define access code**	→ 📄 119
▶ **Reset access code**	→ 📄 119
Device reset	→ 📄 120

Using the parameter to define the access code

Complete this wizard to specify an access code for the Maintenance role.

Navigation
"Setup" menu → Advanced setup → Administration → Define access code

▶ Define access code	
Define access code	→ 119
Confirm access code	→ 119

Parameter overview with brief description

Parameter	Description	User entry
Define access code	Restrict write-access to parameters to protect the configuration of the device against unintentional changes.	Max. 16-digit character string comprising numbers, letters and special characters
Confirm access code	Confirm the entered access code.	Max. 16-digit character string comprising numbers, letters and special characters

Using the parameter to reset the access code

Navigation
"Setup" menu → Advanced setup → Administration → Reset access code

▶ Reset access code	
Operating time	→ 119
Reset access code	→ 119

Parameter overview with brief description

Parameter	Description	User interface / User entry	Factory setting
Operating time	Indicates how long the device has been in operation.	Days (d), hours (h), minutes (m) and seconds (s)	–
Reset access code	Reset access code to factory settings. For a reset code, contact your Endress+Hauser service organization. The reset code can only be entered via: ▪ Web browser ▪ DeviceCare, FieldCare (via CDI-RJ45 service interface) ▪ Fieldbus	Character string comprising numbers, letters and special characters	0x00

Using the parameter to reset the device

Navigation
"Setup" menu → Advanced setup → Administration

Parameter overview with brief description

Parameter	Description	Selection	Factory setting
Device reset	Reset the device configuration - either entirely or in part - to a defined state.	▪ Cancel ▪ To delivery settings ▪ Restart device ▪ Restore S-DAT backup *	Cancel

* Visibility depends on order options or device settings

10.7 Simulation

Via the **Simulation** submenu, it is possible to simulate various process variables in the process and the device alarm mode and verify downstream signal chains (switching valves or closed-control loops). The simulation can be performed without a real measurement (no flow of medium through the device).

Navigation
"Diagnostics" menu → Simulation

▶ **Simulation**

Assign simulation process variable	→ 121
Process variable value	→ 121
Current input 1 to n simulation	→ 122
Value current input 1 to n	→ 122
Status input 1 to n simulation	→ 122
Input signal level 1 to n	→ 122
Current output 1 to n simulation	→ 121
Current output value	→ 121
Frequency output 1 to n simulation	→ 121
Frequency output 1 to n value	→ 121
Pulse output simulation 1 to n	→ 121
Pulse value 1 to n	→ 121
Switch output simulation 1 to n	→ 121
Switch state 1 to n	→ 121
Relay output 1 to n simulation	→ 121

Switch state 1 to n	→ 122
Device alarm simulation	→ 122
Diagnostic event category	→ 122
Diagnostic event simulation	→ 122

Parameter overview with brief description

Parameter	Prerequisite	Description	Selection / User entry	Factory setting
Assign simulation process variable	–	Select a process variable for the simulation process that is activated.	▪ Off ▪ Volume flow ▪ Mass flow ▪ Corrected volume flow ▪ Flow velocity ▪ Conductivity * ▪ Corrected conductivity * ▪ Temperature *	Off
Process variable value	A process variable is selected in the **Assign simulation process variable** parameter (→ 121).	Enter the simulation value for the selected process variable.	Depends on the process variable selected	0
Current output 1 to n simulation	–	Switch the simulation of the current output on and off.	▪ Off ▪ On	Off
Current output value	In the **Current output 1 to n simulation** parameter, the **On** option is selected.	Enter the current value for simulation.	3.59 to 22.5 mA	3.59 mA
Frequency output 1 to n simulation	In the **Operating mode** parameter, the **Frequency** option is selected.	Switch the simulation of the frequency output on and off.	▪ Off ▪ On	Off
Frequency output 1 to n value	In the **Frequency simulation 1 to n** parameter, the **On** option is selected.	Enter the frequency value for the simulation.	0.0 to 12 500.0 Hz	0.0 Hz
Pulse output simulation 1 to n	In the **Operating mode** parameter, the **Pulse** option is selected.	Set and switch off the pulse output simulation. For **Fixed value** option: **Pulse width** parameter (→ 95) defines the pulse width of the pulses output.	▪ Off ▪ Fixed value ▪ Down-counting value	Off
Pulse value 1 to n	In the **Pulse output simulation 1 to n** parameter, the **Down-counting value** option is selected.	Enter the number of pulses for simulation.	0 to 65 535	0
Switch output simulation 1 to n	In the **Operating mode** parameter, the **Switch** option is selected.	Switch the simulation of the switch output on and off.	▪ Off ▪ On	Off
Switch state 1 to n	–	Select the status of the status output for the simulation.	▪ Open ▪ Closed	Open
Relay output 1 to n simulation	–	Switch simulation of the relay output on and off.	▪ Off ▪ On	Off

Parameter	Prerequisite	Description	Selection / User entry	Factory setting
Switch state 1 to n	The **On** option is selected in the **Switch output simulation 1 to n** parameter parameter.	Select status of the relay output for the simulation.	▪ Open ▪ Closed	Open
Device alarm simulation	–	Switch the device alarm on and off.	▪ Off ▪ On	Off
Diagnostic event category	–	Select a diagnostic event category.	▪ Sensor ▪ Electronics ▪ Configuration ▪ Process	Process
Diagnostic event simulation	–	Select a diagnostic event to simulate this event.	▪ Off ▪ Diagnostic event picklist (depends on the category selected)	Off
Current input 1 to n simulation	–	Switch simulation of the current input on and off.	▪ Off ▪ On	Off
Value current input 1 to n	In the **Current input 1 to n simulation** parameter, the **On** option is selected.	Enter the current value for simulation.	0 to 22.5 mA	0 mA
Status input 1 to n simulation	–	Switch simulation of the status input on and off.	▪ Off ▪ On	Off
Input signal level 1 to n	In the **Status input simulation** parameter, the **On** option is selected.	Select the signal level for the simulation of the status input.	▪ High ▪ Low	High

* Visibility depends on order options or device settings

10.8 Protecting settings from unauthorized access

The following write protection options exist in order to protect the configuration of the measuring device from unintentional modification:
- Protect access to parameters via access code → 🗎 122
- Protect access to local operation via key locking → 🗎 58
- Protect access to measuring device via write protection switch → 🗎 124

10.8.1 Write protection via access code

The effects of the user-specific access code are as follows:
- Via local operation, the parameters for the measuring device configuration are write-protected and their values can no longer be changed.
- Device access is protected via the Web browser, as are the parameters for the measuring device configuration.
- Device access is protected via FieldCare or DeviceCare (via CDI-RJ45 service interface), as are the parameters for the measuring device configuration.

Defining the access code via the local display

1. Navigate to the **Define access code** parameter (→ 🗎 119).
2. Maximum of 16-digit character string comprising numbers, letters and special characters as the access code.

3. Enter the access code again in the **Confirm access code** parameter (→ 🗎 119) to confirm.
   ↳ The 🔒 symbol appears in front of all write-protected parameters.

- Disabling parameter write protection via access code → 🗎 57.
- If the access code is lost: Resetting the access code → 🗎 123.
- The user role with which the user is currently logged in is displayed in **Access status** parameter.
  - Navigation path: Operation → Access status
  - User roles and their access rights → 🗎 57

- The device automatically locks the write-protected parameters again if a key is not pressed for 10 minutes in the navigation and editing view.
- The device locks the write-protected parameters automatically after 60 s if the user skips back to the operational display mode from the navigation and editing view.

Parameters which can always be modified via the local display

Certain parameters that do not affect the measurement are excepted from parameter write protection via the local display. Despite the user-specific access code, they can always be modified, even if the other parameters are locked.

Parameters for configuring the language	Parameters for configuring the local display	Parameters for configuring the totalizer
↓	↓	↓
Display language	Format display	Control Totalizer
	Contrast display	Preset value
	Display interval	Reset all totalizers

Defining the access code via the web browser

1. Navigate to the **Define access code** parameter (→ 🗎 119).
2. Define a 16-digit (max.) numeric code as the access code.
3. Enter the access code again in the **Confirm access code** parameter (→ 🗎 119) to confirm.
   ↳ The web browser switches to the login page.

- Disabling parameter write protection via access code → 🗎 57.
- If the access code is lost: Resetting the access code → 🗎 123.
- The **Access status** parameter shows which user role the user is currently logged in with.
  - Navigation path: Operation → Access status
  - User roles and their access rights → 🗎 57

If no action is performed for 10 minutes, the web browser automatically returns to the login page.

Resetting the access code

If you misplace the user-specific access code, it is possible to reset the code to the factory setting. A reset code must be entered for this purpose. The user-specific access code can then be defined again afterwards.

Via Web browser, FieldCare, DeviceCare (via CDI-RJ45 service interface), fieldbus

You can only obtain a reset code from your local Endress+Hauser service organization. The code must be calculated explicitly for every device.

1. Note down the serial number of the device.
2. Read off the **Operating time** parameter.
3. Contact the local Endress+Hauser service organization and tell them the serial number and the operating time.
   ↳ Get the calculated reset code.
4. Enter the reset code in the **Reset access code** parameter (→ 119).
   ↳ The access code has been reset to the factory setting **0000**. It can be redefined → 122.

For IT security reasons, the calculated reset code is only valid for 96 hours from the specified operating time and for the specific serial number. If you cannot return to the device within 96 hours, you should either increase the operating time you read out by a few days or switch off the device.

10.8.2 Write protection via write protection switch

Unlike parameter write protection via a user-specific access code, this allows the user to lock write access to the entire operating menu - apart from the **"Contrast display" parameter**.

The parameter values are now read only and cannot be edited any more (exception **"Contrast display" parameter**):
- Via local display
- Via PROFINET protocol

1. 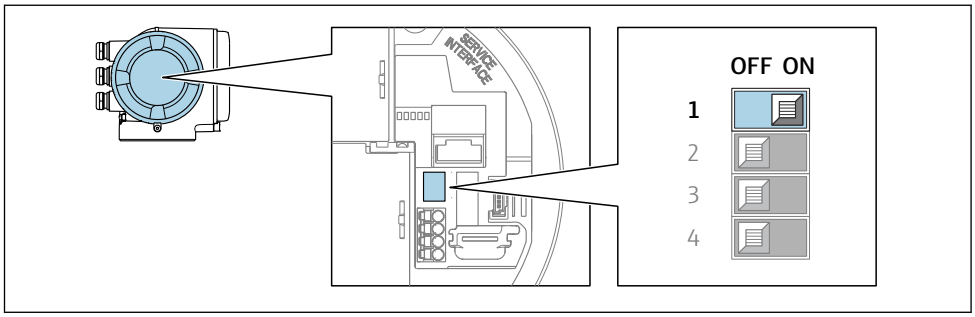

A0029630

   Setting the write protection (WP) switch on the main electronics module to the **ON** position enables hardware write protection.
   ↳ In the **Locking status** parameter, the **Hardware locked** option is displayed → 126. In addition, on the local display the symbol appears in front of the parameters in the header of the operational display and in the navigation view.

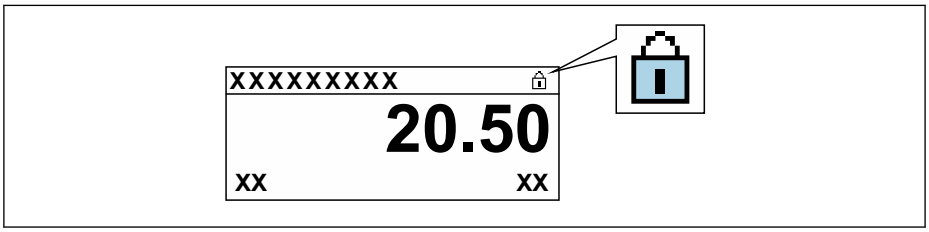

A0029425

2. Setting the write protection (WP) switch on the main electronics module to the **OFF** position (factory setting) disables hardware write protection.
   ↳ No option is displayed in the **Locking status** parameter → 📄 126. On the local display, the 🔒 symbol disappears from in front of the parameters in the header of the operational display and in the navigation view.

11 Operation

11.1 Reading the device locking status

Device active write protection: **Locking status** parameter

Operation → Locking status

Function scope of the "Locking status" parameter

Options	Description
None	The access authorization displayed in the **Access status** parameter applies → 📄 57. Only appears on local display.
Hardware locked	The DIP switch for hardware locking is activated on the PCB board. This locks write access to the parameters (e.g. via local display or operating tool) → 📄 124.
Temporarily locked	Write access to the parameters is temporarily locked on account of internal processes running in the device (e.g. data upload/download, reset, etc.). Once the internal processing has been completed, the parameters can be changed again.

11.2 Adjusting the operating language

Detailed information:
- To configure the operating language → 📄 81
- For information on the operating languages supported by the measuring device → 📄 197

11.3 Configuring the display

Detailed information:
- On the basic settings for the local display
- On the advanced settings for the local display → 📄 110

11.4 Reading off measured values

With the **Measured values** submenu, it is possible to read all the measured values.

Navigation
"Diagnostics" menu → Measured values

▶ **Measured values**	
▶ **Process variables**	→ 📄 127
▶ **Totalizer**	→ 📄 128
▶ **Input values**	→ 📄 128
▶ **Output values**	→ 📄 130

11.4.1 "Process variables" submenu

The **Process variables** submenu contains all the parameters needed to display the current measured values for each process variable.

Navigation
"Diagnostics" menu → Measured values → Process variables

▶ Process variables	
Volume flow	→ 📄 127
Mass flow	→ 📄 127
Corrected volume flow	→ 📄 127
Flow velocity	→ 📄 127
Conductivity	→ 📄 127
Corrected conductivity	→ 📄 128
Temperature	→ 📄 128
Density	→ 📄 128

Parameter overview with brief description

Parameter	Prerequisite	Description	User interface
Volume flow	–	Displays the volume flow that is currently measured. *Dependency* The unit is taken from: **Volume flow unit** parameter (→ 📄 86)	Signed floating-point number
Mass flow	–	Displays the mass flow that is currently calculated. *Dependency* The unit is taken from the **Mass flow unit** parameter (→ 📄 86).	Signed floating-point number
Corrected volume flow	–	Displays the corrected volume flow that is currently calculated. *Dependency* The unit is taken from: **Corrected volume flow unit** parameter (→ 📄 86)	Signed floating-point number
Flow velocity	–	Displays the flow velocity that is currently calculated.	Signed floating-point number
Conductivity	–	Displays the conductivity that is currently measured. *Dependency* The unit is taken from the **Conductivity unit** parameter (→ 📄 86).	Signed floating-point number

Parameter	Prerequisite	Description	User interface
Corrected conductivity	One of the following conditions is met: ▪ Order code for "Sensor option", option **CI** "Medium temperature measurement" or ▪ The temperature is read into the flowmeter from an external device.	Displays the conductivity currently corrected. *Dependency* The unit is taken from: **Conductivity unit** parameter (→ 🗎 86)	Positive floating-point number
Temperature	One of the following conditions is met: ▪ Order code for "Sensor option", option **CI** "Medium temperature measurement" or ▪ The temperature is read into the flowmeter from an external device.	Displays the temperature that is currently calculated. *Dependency* The unit is taken from: **Temperature unit** parameter (→ 🗎 86)	Positive floating-point number
Density	–	Displays the current fixed density or density read in from an external device. *Dependency* The unit is taken from: **Density unit** parameter	Signed floating-point number

11.4.2 Totalizer

The **Totalizer** submenu contains all the parameters needed to display the current measured values for every totalizer.

Navigation

"Diagnostics" menu → Measured values → Totalizer

▶ **Totalizer 1 to n**

Assign process variable → 🗎 109

Parameter overview with brief description

Parameter	Description	Selection / User interface	Factory setting
Assign process variable 1 to n	Select process variable for totalizer.	▪ Volume flow ▪ Mass flow ▪ Corrected volume flow	Volume flow
Totalizer 1 to n value	Shows the totalizer value reported to the controller for further processing.	Signed floating-point number	0 l
Totalizer 1 to n status	Shows the status of the totalizer value reported to the controller for further processing ('Good', 'Uncertain', 'Bad').	▪ Good ▪ Uncertain ▪ Bad	Good
Totalizer 1 to n status (Hex)	Shows the status of the totalizer value reported to the controller for further processing (Hex).	0 to 255	128

11.4.3 "Input values" submenu

The **Input values** submenu guides you systematically to the individual input values.

Navigation
"Diagnostics" menu → Measured values → Input values

▶ **Input values**		
	▶ **Current input 1 to n**	→ 📄 129
	▶ **Status input 1 to n**	→ 📄 129

Input values of current input

The **Current input 1 to n** submenu contains all the parameters needed to display the current measured values for every current input.

Navigation
"Diagnostics" menu → Measured values → Input values → Current input 1 to n

▶ **Current input 1 to n**		
	Measured values 1 to n	→ 📄 129
	Measured current 1 to n	→ 📄 129

Parameter overview with brief description

Parameter	Description	User interface
Measured values 1 to n	Displays the current input value.	Signed floating-point number
Measured current 1 to n	Displays the current value of the current input.	0 to 22.5 mA

Input values of status input

The **Status input 1 to n** submenu contains all the parameters needed to display the current measured values for every status input.

Navigation
"Diagnostics" menu → Measured values → Input values → Status input 1 to n

▶ **Status input 1 to n**		
	Value status input	→ 📄 129

Parameter overview with brief description

Parameter	Description	User interface
Value status input	Shows the current input signal level.	▪ High ▪ Low

11.4.4 Output values

The **Output values** submenu contains all the parameters needed to display the current measured values for every output.

Navigation
"Diagnostics" menu → Measured values → Output values

▶ **Output values**		
	▶ **Current output 1 to n**	→ 📄 130
	▶ **Pulse/frequency/switch output 1 to n**	→ 📄 130
	▶ **Relay output 1 to n**	→ 📄 131

Output values of current output

The **Value current output** submenu contains all the parameters needed to display the current measured values for every current output.

Navigation
"Diagnostics" menu → Measured values → Output values → Value current output 1 to n

▶ **Current output 1 to n**		
	Output current	→ 📄 130
	Measured current	→ 📄 130

Parameter overview with brief description

Parameter	Description	User interface
Output current	Displays the current value currently calculated for the current output.	3.59 to 22.5 mA
Measured current	Displays the current value currently measured for the current output.	0 to 30 mA

Output values for pulse/frequency/switch output

The **Pulse/frequency/switch output 1 to n** submenu contains all the parameters needed to display the current measured values for every pulse/frequency/switch output.

Navigation
"Diagnostics" menu → Measured values → Output values → Pulse/frequency/switch output 1 to n

▶ **Pulse/frequency/switch output 1 to n**

Output frequency	→ 📄 131
Pulse output 1 to n	→ 📄 131
Switch state	→ 📄 131

Parameter overview with brief description

Parameter	Prerequisite	Description	User interface
Output frequency	In the **Operating mode** parameter, the **Frequency** option is selected.	Displays the value currently measured for the frequency output.	0.0 to 12 500.0 Hz
Pulse output 1 to n	The **Pulse** option is selected in the **Operating mode** parameter parameter.	Displays the pulse frequency currently output.	Positive floating-point number
Switch state	The **Switch** option is selected in the **Operating mode** parameter.	Displays the current switch output status.	▪ Open ▪ Closed

Output values for relay output

The **Relay output 1 to n** submenu contains all the parameters needed to display the current measured values for every relay output.

Navigation
"Diagnostics" menu → Measured values → Output values → Relay output 1 to n

▶ **Relay output 1 to n**	
Switch state	→ 📄 131
Switch cycles	→ 📄 131
Max. switch cycles number	→ 📄 131

Parameter overview with brief description

Parameter	Description	User interface
Switch state	Shows the current relay switch status.	▪ Open ▪ Closed
Switch cycles	Shows number of all performed switch cycles.	Positive integer
Max. switch cycles number	Shows the maximal number of guaranteed switch cycles.	Positive integer

11.5 Adapting the measuring device to the process conditions

The following are available for this purpose:
- Basic settings using the**Setup** menu (→ 📄 82)
- Advanced settings using the**Advanced setup** submenu (→ 📄 107)

11.6 Performing a totalizer reset

The totalizers are reset in the **Operation** submenu:
- Control Totalizer
- Reset all totalizers

Navigation
"Operation" menu → Totalizer handling

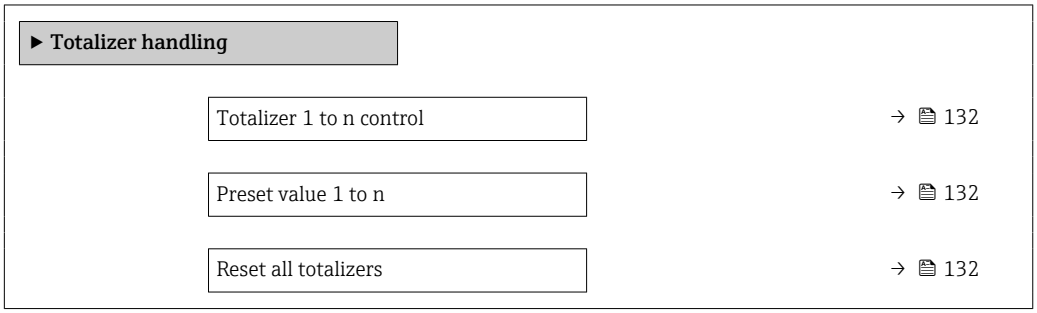

Parameter overview with brief description

Parameter	Description	Selection / User entry	Factory setting
Totalizer 1 to n control	Operate the totalizer.	▪ Reset + hold ▪ Preset + hold ▪ Hold ▪ Totalize	Totalize
Preset value 1 to n	Specify start value for totalizer.	Signed floating-point number	0 l
Reset all totalizers	Reset all totalizers to 0 and start.	▪ Cancel ▪ Reset + totalize	Cancel

11.6.1 Function scope of "Control Totalizer" parameter

Options	Description
Totalize	The totalizer is started or continues running.
Reset + hold	The totaling process is stopped and the totalizer is reset to 0.
Preset + hold [1)]	The totaling process is stopped and the totalizer is set to its defined start value from the **Preset value** parameter.
Reset + totalize	The totalizer is reset to 0 and the totaling process is restarted.
Preset + totalize [1)]	The totalizer is set to the defined start value in the **Preset value** parameter and the totaling process is restarted.
Hold	Totalizing is stopped.

1) Visible depending on the order options or device settings

11.6.2 Function range of "Reset all totalizers" parameter

Options	Description
Cancel	No action is executed and the user exits the parameter.
Reset + totalize	Resets all totalizers to 0 and restarts the totaling process. This deletes all the previously aggregated flow values.

11.7 Displaying the measured value history

The **Extended HistoROM** application package must be enabled in the device (order option) for the **Data logging** submenu to appear. This contains all the parameters for the measured value history.

Data logging is also available via:
- Plant Asset Management Tool FieldCare → 68.
- Web browser

Function scope
- A total of 1000 measured values can be stored
- 4 logging channels
- Adjustable logging interval for data logging
- Displays the measured value trend for each logging channel in the form of a chart

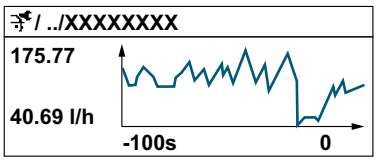

A0034352

- x-axis: depending on the number of channels selected displays 250 to 1000 measured values of a process variable.
- y-axis: displays the approximate measured value span and constantly adapts this to the ongoing measurement.

If the length of the logging interval or the assignment of the process variables to the channels is changed, the content of the data logging is deleted.

Navigation
"Diagnostics" menu → Data logging

▶ Data logging	
Assign channel 1	→ 134
Assign channel 2	→ 134
Assign channel 3	→ 134
Assign channel 4	→ 134
Logging interval	→ 135
Clear logging data	→ 135
Data logging	→ 135
Logging delay	→ 135
Data logging control	→ 135

Data logging status	→ 📄 135
Entire logging duration	→ 📄 135

Parameter overview with brief description

Parameter	Prerequisite	Description	Selection / User entry / User interface	Factory setting
Assign channel 1	The **Extended HistoROM** application package is available.	Assign process variable to logging channel.	▪ Off ▪ Volume flow ▪ Mass flow ▪ Corrected volume flow ▪ Flow velocity ▪ Conductivity * ▪ Corrected conductivity * ▪ Temperature * ▪ Electronics temperature ▪ Current output 1 * ▪ Current output 2 * ▪ Current output 3 * ▪ Current output 4 * ▪ Noise * ▪ Coil current shot time * ▪ Reference electrode potential against PE * ▪ HBSI * ▪ Build-up index * ▪ Test point 1 ▪ Test point 2 ▪ Test point 3	Off
Assign channel 2	The **Extended HistoROM** application package is available. ℹ The software options currently enabled are displayed in the **Software option overview** parameter.	Assign a process variable to logging channel.	For the picklist, see **Assign channel 1** parameter (→ 📄 134)	Off
Assign channel 3	The **Extended HistoROM** application package is available. ℹ The software options currently enabled are displayed in the **Software option overview** parameter.	Assign a process variable to logging channel.	For the picklist, see **Assign channel 1** parameter (→ 📄 134)	Off
Assign channel 4	The **Extended HistoROM** application package is available. ℹ The software options currently enabled are displayed in the **Software option overview** parameter.	Assign a process variable to logging channel.	For the picklist, see **Assign channel 1** parameter (→ 📄 134)	Off

Parameter	Prerequisite	Description	Selection / User entry / User interface	Factory setting
Logging interval	The **Extended HistoROM** application package is available.	Define the logging interval for data logging. This value defines the time interval between the individual data points in the memory.	0.1 to 3 600.0 s	1.0 s
Clear logging data	The **Extended HistoROM** application package is available.	Clear the entire logging data.	▪ Cancel ▪ Clear data	Cancel
Data logging	–	Select the type of data logging.	▪ Overwriting ▪ Not overwriting	Overwriting
Logging delay	In the **Data logging** parameter, the **Not overwriting** option is selected.	Enter the time delay for measured value logging.	0 to 999 h	0 h
Data logging control	In the **Data logging** parameter, the **Not overwriting** option is selected.	Start and stop measured value logging.	▪ None ▪ Delete + start ▪ Stop	None
Data logging status	In the **Data logging** parameter, the **Not overwriting** option is selected.	Displays the measured value logging status.	▪ Done ▪ Delay active ▪ Active ▪ Stopped	Done
Entire logging duration	In the **Data logging** parameter, the **Not overwriting** option is selected.	Displays the total logging duration.	Positive floating-point number	0 s

* Visibility depends on order options or device settings

12 Diagnostics and troubleshooting

12.1 General troubleshooting

For local display

Fault	Possible causes	Remedial action
Local display is dark, but signal output is within the valid range	The cable of the display module is not plugged in correctly.	Insert the plug correctly into the main electronics module and display module.
Local display dark and no output signals	Supply voltage does not match the voltage specified on the nameplate.	Apply the correct supply voltage .
Local display dark and no output signals	Supply voltage has incorrect polarity.	Reverse polarity of supply voltage.
Local display dark and no output signals	No contact between connecting cables and terminals.	Check the electrical contact between the cable and terminals and correct if necessary.
Local display dark and no output signals	▪ Terminals are not plugged into the I/O electronics module correctly. ▪ Terminals are not plugged into the main electronics module correctly.	Check terminals.
Local display dark and no output signals	▪ I/O electronics module is defective. ▪ Main electronics module is defective.	Order spare part → 🗎 173.
Local display cannot be read, but signal output is within the valid range	Display is set too bright or too dark.	▪ Set the display brighter by simultaneously pressing ⊞ + Ⓔ. ▪ Set the display darker by simultaneously pressing ⊟ + Ⓔ.
Local display is dark, but signal output is within the valid range	Display module is defective.	Order spare part → 🗎 173.
Backlighting of local display is red	Diagnostic event with "Alarm" diagnostic behavior has occurred.	Take remedial actions → 🗎 146
Text on local display appears in a language that cannot be understood.	The selected operating language cannot be understood.	1. Press ⊟ + ⊞ for 2 s ("home position"). 2. Press Ⓔ. 3. Configure the required language in the **Display language** parameter (→ 🗎 102).
Message on local display: "Communication Error" "Check Electronics"	Communication between the display module and the electronics is interrupted.	▪ Check the cable and the connector between the main electronics module and display module. ▪ Order spare part → 🗎 173.

For output signals

Fault	Possible causes	Remedial action
Signal output outside the valid range	Main electronics module is defective.	Order spare part → 🗎 173.
Device shows correct value on local display, but signal output is incorrect, though in the valid range.	Parameter configuration error	Check and adjust parameter configuration.
Device is measuring incorrectly.	Configuration error or device is operated outside the application.	1. Check and correct parameter configuration. 2. Observe limit values specified in the "Technical Data".

For access

Fault	Possible causes	Remedial action
Write access to parameters is not possible.	Hardware write protection is enabled.	Set the write protection switch on the main electronics module to the **OFF** position → 🗎 124.
Write access to parameters is not possible.	Current user role has limited access authorization.	1. Check user role → 🗎 57. 2. Enter correct customer-specific access code → 🗎 57.
Connection to the web server is not possible.	Web server is disabled.	Use the "FieldCare" or "DeviceCare" operating tool to check if the web server of the device is enabled and enable if necessary → 🗎 64.
	The Ethernet interface on the PC is incorrectly configured.	▶ Check the properties of the Internet protocol (TCP/IP)→ 🗎 60. ▶ Check the network settings with the IT manager.
Connection to the web server is not possible.	WLAN access data are incorrect.	▪ Check WLAN network status. ▪ Log on to the device again using WLAN access data. ▪ Check that WLAN is enabled on the measuring instrument and operating unit → 🗎 60.
	WLAN communication is disabled.	–
Unable to connect to web server, FieldCare or DeviceCare.	WLAN network is not available.	▪ Check if WLAN reception is present: LED on display module is lit blue. ▪ Check if WLAN connection is enabled: LED on display module flashes blue. ▪ Switch on instrument function.
Network connection not present or unstable	WLAN network is weak.	▪ Operating unit outside reception range: Check network status on operating unit. ▪ To improve network performance, use an external WLAN antenna.
	Parallel WLAN and Ethernet communication	▪ Check network settings. ▪ Temporarily enable only the WLAN as an interface.
Web browser is frozen and operation no longer possible	Data transfer is active.	Wait until data transfer or current action is finished.
	Connection lost	▶ Check cable connection and power supply. ▶ Refresh the web browser and restart if necessary.
Display of web browser content is difficult to read or incomplete.	Web browser version used is not optimal.	▶ Use correct web browser version → 🗎 59. ▶ Empty the web browser cache. ▶ Restart the web browser.
	Unsuitable view settings.	Change the font size/display ratio of the web browser.
Incomplete or no display of content in the web browser	▪ JavaScript is not enabled. ▪ JavaScript cannot be enabled.	▶ Enable JavaScript. ▶ Enter http://XXX.XXX.X.X.XX/servlet/basic.html as the IP address.
Operation with FieldCare or DeviceCare via service interface CDI-RJ45 (port 8000) is not possible.	Firewall of the PC or network is blocking communication.	Depending on the settings of the firewall used on the PC or in the network, the firewall must be adapted or disabled to allow FieldCare/DeviceCare access.
Flashing the firmware with FieldCare or DeviceCare via service interface CDI-RJ45 (port 8000 or TFTP ports) is not possible.	Firewall of the PC or network is blocking communication.	Depending on the settings of the firewall used on the PC or in the network, the firewall must be adapted or disabled to allow FieldCare/DeviceCare access.

For system integration

Error	Possible causes	Remedy
The PROFINET device name is not displayed correctly and contains coding.	A device name containing one or more underscores has been specified via the automation system.	Specify a correct device name (without underscores) via the automation system.

12.2 Diagnostic information via LEDs

12.2.1 Transmitter

Various LEDs in the transmitter provide information on the device status.

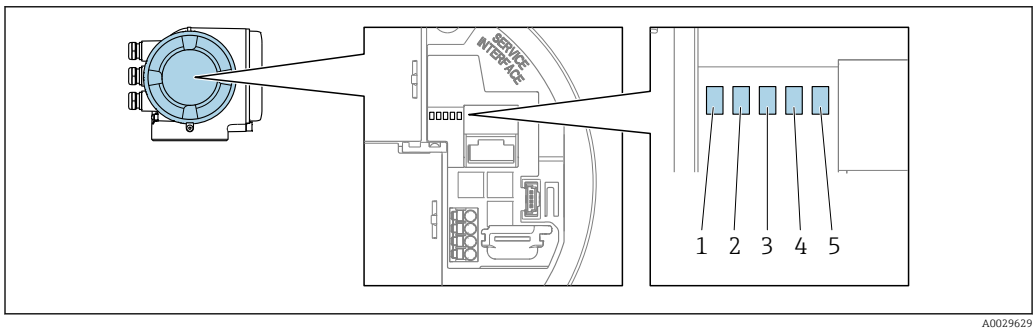

A0029629

1 *Supply voltage*
2 *Device status*
3 *Flashing/network status*
4 *Port 1 active: PROFINET over Ethernet-APL*
5 *Port 2 active: service interface (CDI)*

LED	Color	Meaning
1 Supply voltage	Off	Supply voltage is off or too low.
	Green	Supply voltage is OK.
2 Device status/module status (normal operation)	Off	Firmware error
	Green	Device status is OK.
	Flashing green	Device is not configured.
	Flashing red	A diagnostic event with "Warning" diagnostic behavior has occurred.
	Red	A diagnostic event with "Alarm" diagnostic behavior has occurred.
	Red/green flashing	The device restarts/self-test.
3 Flashing/network status	Green	Cyclic data exchange is active.
	Flashing green	Following request from automation system: Flash frequency: 1 Hz (flash functionality: 500 ms on, 500 ms off) If no "Name of Station" is defined: ▪ Flash frequency: 4 Hz ▪ Display: no "Name of Station" available.
	Red	IP address is available but there is no connection to the automation system
	Flashing red	Cyclic data exchange was active but the connection was disconnected: Flash frequency: 3 Hz

LED		Color	Meaning
4	Port 1 active: PROFINET over Ethernet-APL	Off	Not connected or no connection established.
		White	Connection available, no active communication
		Flashing white	Connection with active communication
5	Port 2 active: Service interface CDI-RJ45	Off	Not connected or no connection established.
		Orange	Connection available but no activity.
		Flashing orange	Activity present.

12.3 Diagnostic information on local display

12.3.1 Diagnostic message

Faults detected by the self-monitoring system of the measuring instrument are displayed as a diagnostic message in alternation with the operational display.

Operational display in alarm condition	Diagnostic message

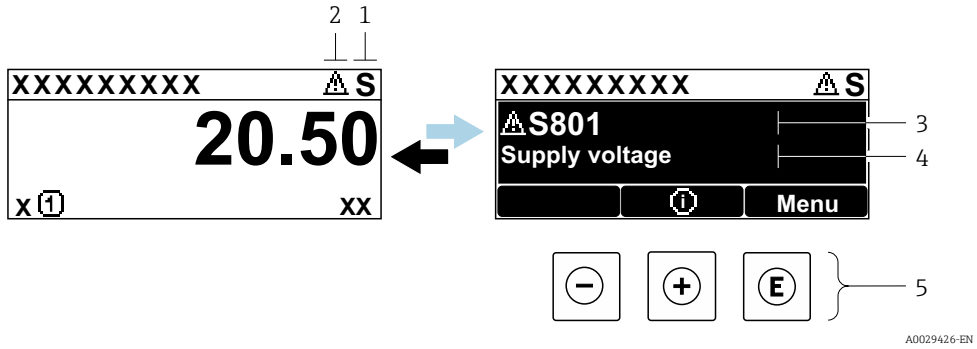

1 *Status signal*
2 *Diagnostic behavior*
3 *Diagnostic behavior with diagnostic code*
4 *Event text*
5 *Operating elements*

If two or more diagnostic events are pending simultaneously, only the message of the diagnostic event with the highest priority is shown.

Other diagnostic events that have occurred can be displayed in the **Diagnostics** menu:
- Via parameter → 165
- Via submenus → 166

Status signals

The status signals provide information on the state and reliability of the device by categorizing the cause of the diagnostic information (diagnostic event).

The status signals are categorized in accordance with VDI/VDE 2650 and NAMUR Recommendation NE 107:
- F = Failure
- C = Function Check
- S = Out of Specification
- M = Maintenance Required

Symbol	Meaning
F	**Failure** A device error has occurred. The measured value is no longer valid.
C	**Function check** The device is in the service mode (e.g. during a simulation).
S	**Out of specification** The device is being operated: Outside its technical specification limits (e.g. outside the process temperature range)
M	**Maintenance required** Maintenance is required. The measured value remains valid.

Diagnostic behavior

Symbol	Meaning
	Alarm ▪ Measurement is interrupted. ▪ Signal outputs and totalizers assume the defined alarm condition. ▪ A diagnostic message is generated.
	Warning ▪ Measurement is resumed. ▪ The signal outputs and totalizers are not affected. ▪ A diagnostic message is generated.

Diagnostic information

The fault can be identified using the diagnostic information. The short text helps you by providing information about the fault. In addition, the corresponding symbol for the diagnostic behavior is displayed in front of the diagnostic information on the local display.

Operating elements

Operating key	Meaning
	Plus key *In menu, submenu* Opens the message about the remedial measures.
	Enter key *In menu, submenu* Opens the operating menu.

12.3.2 Calling up remedial actions

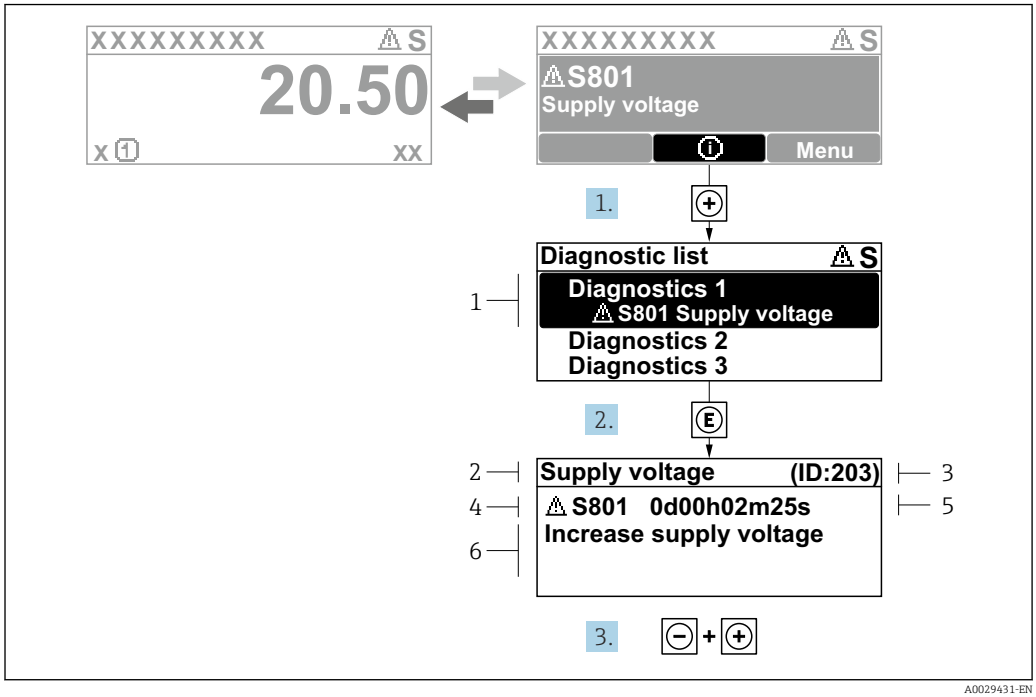

25 *Message for remedial actions*

1 *Diagnostic information*
2 *Event text*
3 *Service ID*
4 *Diagnostic behavior with diagnostic code*
5 *Operating time of occurrence*
6 *Remedial actions*

1. The user is in the diagnostic message.
   Press ⊞ (ⓘ symbol).
   ↳ The **Diagnostic list** submenu opens.
2. Select the desired diagnostic event with ⊞ or ⊟ and press Ⓔ .
   ↳ The message about the remedial measures opens.
3. Press ⊟ + ⊞ simultaneously.
   ↳ The message about the remedial measures closes.

The user is in the **Diagnostics** menu in the **Diagnostic list** submenu. A list of active diagnostics is displayed. The user can select a diagnostic event.

1. Press Ⓔ.
   ↳ The message for the remedial actions for the selected diagnostic event opens.
2. Press ⊟ + ⊞ simultaneously.
   ↳ The message about the remedial actions closes.

12.4 Diagnostic information in the web browser

12.4.1 Diagnostic options

Any faults detected by the measuring device are displayed in the Web browser on the home page once the user has logged on.

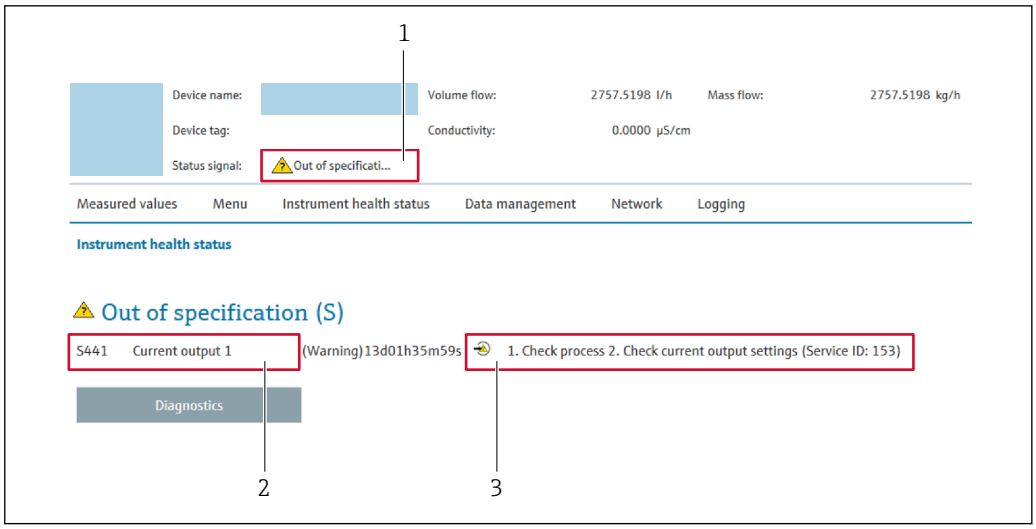

A0031056

1 *Status area with status signal*
2 *Diagnostic information*
3 *Remedial measures with service ID*

In addition, diagnostic events which have occurred can be shown in the **Diagnostics** menu:
- Via parameter → 165
- Via submenu → 166

Status signals

The status signals provide information on the state and reliability of the device by categorizing the cause of the diagnostic information (diagnostic event).

Symbol	Meaning
	Failure A device error has occurred. The measured value is no longer valid.
	Function check The device is in service mode (e.g. during a simulation).
	Out of specification The device is being operated: Outside its technical specification limits (e.g. outside the process temperature range)
	Maintenance required Maintenance is required. The measured value remains valid.

The status signals are categorized in accordance with VDI/VDE 2650 and NAMUR Recommendation NE 107.

12.4.2 Calling up remedial actions

Remedial actions are provided for each diagnostic event to ensure that problems can be rectified quickly. These actions are displayed along with the diagnostic event and the related diagnostic information.

12.5 Diagnostic information in FieldCare or DeviceCare

12.5.1 Diagnostic options

Any faults detected by the measuring device are displayed on the home page of the operating tool once the connection has been established.

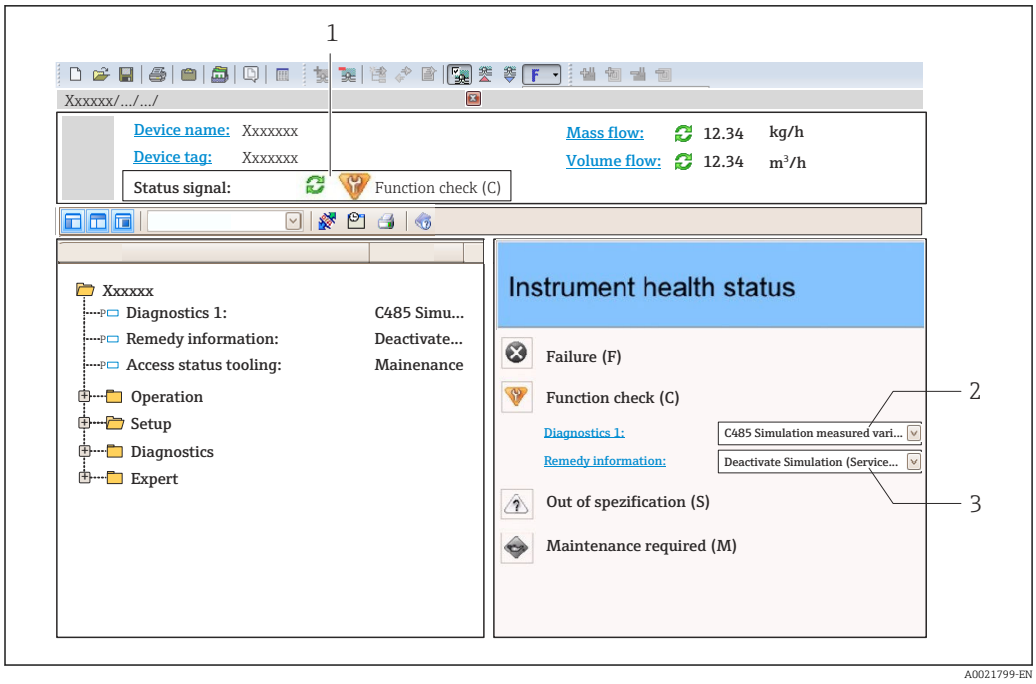

1 *Status area with status signal* → 📄 *140*
2 *Diagnostic information* → 📄 *141*
3 *Remedial actions with service ID*

In addition, diagnostic events which have occurred can be shown in the **Diagnostics** menu:
- Via parameter → 📄 165
- Via submenu → 📄 166

Diagnostic information

The fault can be identified using the diagnostic information. The short text helps you by providing information about the fault. In addition, the corresponding symbol for the diagnostic behavior is displayed in front of the diagnostic information on the local display.

12.5.2 Calling up remedy information

Remedy information is provided for every diagnostic event to ensure that problems can be rectified quickly:
- On the home page
  Remedy information is displayed in a separate field below the diagnostics information.
- In the **Diagnostics** menu
  Remedy information can be called up in the working area of the user interface.

The user is in the **Diagnostics** menu.

1. Call up the desired parameter.
2. On the right in the working area, mouse over the parameter.
   ↳ A tool tip with remedy information for the diagnostic event appears.

12.6 Adapting the diagnostic information

12.6.1 Adapting the diagnostic behavior

Each item of diagnostic information is assigned a specific diagnostic behavior at the factory. The user can change this assignment for specific diagnostic information in the **Diagnostic behavior** submenu.

Expert → System → Diagnostic handling → Diagnostic behavior

Available diagnostic behaviors

The following diagnostic behaviors can be assigned:

Diagnostic behavior	Description
Alarm	The device stops measurement. The totalizers assume the defined alarm condition. A diagnostic message is generated.
Warning	The device continues to measure. Measured value output via PROFINET and totalizers are not affected. A diagnostic message is generated.
Logbook entry only	The device continues to measure. The diagnostic message is only displayed in the **Event logbook** submenu (**Event list** submenu) and is not displayed in alternating sequence with the operational display.
Off	The diagnostic event is ignored, and no diagnostic message is generated or entered.

Displaying the measured value status

If modules with input data (e.g. Analog Input module, Discrete Input module, Totalizer module, Heartbeat module) are configured for cyclic data transmission, the measured value status is coded as per PROFINET PA Profile 4 Specification and transmitted along with the measured value to the PROFINET Controller via the status byte. The status byte is split into three segments: Quality, Quality Substatus and Limits.

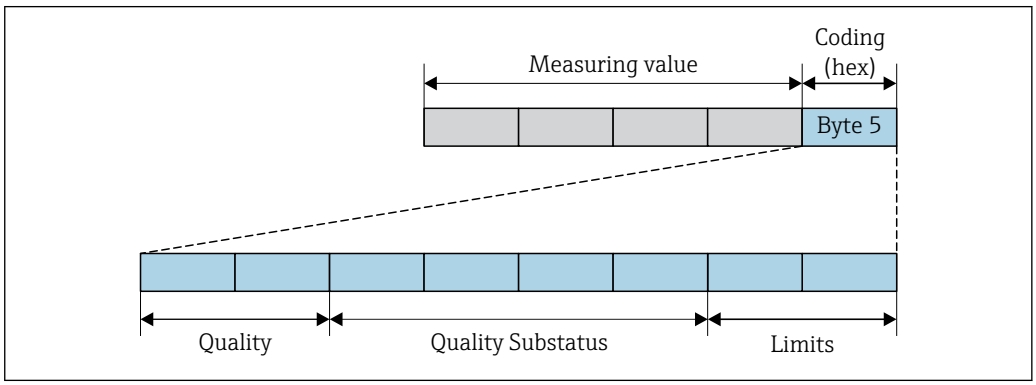

26 Structure of the status byte

The contents of the status byte depends on the configured failure mode in the individual function block. Depending on which failure mode has been configured, status information in accordance with PROFINET PA Profile Specification 4 is transmitted to the the PROFINET over Ethernet-APL controller via the status byte status information. The two bits for the limits always have the value 0.

Supported status information

Status	Coding (hex)
BAD - Maintenance alarm	0x24 to 0x27
BAD - Process related	0x28 to 0x2B
BAD - Function check	0x3C to 0x3F
UNCERTAIN - Initial value	0x4C to 0x4F
UNCERTAIN - Maintenance demanded	0x68 to 0x6B
UNCERTAIN - Process related	0x78 to 0x7B
GOOD - OK	0x80 to 0x83
GOOD - Maintenance required	0xA4 to 0xA7
GOOD - Maintenance demanded	0xA8 to 0xAB
GOOD - Function check	0xBC to 0xBF

12.7 Overview of diagnostic information

The amount of diagnostic information and the number of measured variables affected increase if the measuring device has one or more application packages.

In the case of some items of diagnostic information, the diagnostic behavior can be changed. Adapting the diagnostic information → 145

12.7.1 Diagnostic of sensor

Diagnostic information			Remedy instructions	Influenced measured variables
No.	Short text			
043	Sensor 1 short circuit detected		1. Check sensor cable and sensor 2. Execute Heartbeat Verification 3. Replace sensor cable or sensor	▪ Conductivity ▪ Corrected conductivity ▪ Measured values ▪ Density ▪ Electronics temperature ▪ Flow velocity ▪ Mass flow ▪ **Corrected volume flow** option ▪ Temperature ▪ Volume flow
	Measured variable status [from the factory] [1]			
	Quality	Good		
	Quality substatus	Ok		
	Coding (hex)	0x80 to 0x83		
	Status signal	S		
	Diagnostic behavior	Warning		

1) Diagnostic behavior can be changed. This causes the overall status of the measured variable to change.

Diagnostic information			Remedy instructions	Influenced measured variables
No.	Short text			
082	Data storage inconsistent		Check module connections	▪ Conductivity ▪ Corrected conductivity ▪ Measured values ▪ Density ▪ Electronics temperature ▪ Flow velocity ▪ Mass flow ▪ **Corrected volume flow** option ▪ Temperature ▪ Volume flow
	Measured variable status			
	Quality	Good		
	Quality substatus	Ok		
	Coding (hex)	0x80 to 0x83		
	Status signal	F		
	Diagnostic behavior	Alarm		

Diagnostic information			Remedy instructions	Influenced measured variables
No.	**Short text**			
083	Memory content inconsistent		1. Restart device 2. Restore S-DAT data 3. Replace S-DAT	▪ Conductivity ▪ Corrected conductivity ▪ Measured values ▪ Density ▪ Electronics temperature ▪ Flow velocity ▪ Mass flow ▪ **Corrected volume flow** option ▪ Temperature ▪ Volume flow
	Measured variable status			
	Quality	Good		
	Quality substatus	Ok		
	Coding (hex)	0x80 to 0x83		
	Status signal	F		
	Diagnostic behavior	Alarm		

Diagnostic information			Remedy instructions	Influenced measured variables
No.	**Short text**			
143	HBSI limit exceeded		1. Check if external magnetic interference is present 2. Check flow value 3. Replace sensor	▪ Conductivity ▪ Corrected conductivity ▪ Measured values ▪ Density ▪ Electronics temperature ▪ Flow velocity ▪ Mass flow ▪ **Corrected volume flow** option ▪ Temperature ▪ Volume flow
	Measured variable status [from the factory] [1]			
	Quality	Good		
	Quality substatus	Ok		
	Coding (hex)	0x80 to 0x83		
	Status signal	M		
	Diagnostic behavior	Warning		

1) Diagnostic behavior can be changed. This causes the overall status of the measured variable to change.

Diagnostic information			Remedy instructions	Influenced measured variables
No.	**Short text**			
168	Build-up limit exceeded		Clean measuring tube	▪ Conductivity ▪ Corrected conductivity ▪ Measured values ▪ Density ▪ Electronics temperature ▪ Flow velocity ▪ Mass flow ▪ **Corrected volume flow** option ▪ Temperature ▪ Volume flow
	Measured variable status			
	Quality	Good		
	Quality substatus	Ok		
	Coding (hex)	0x80 to 0x83		
	Status signal	M		
	Diagnostic behavior	Warning		

Diagnostic information			Remedy instructions	Influenced measured variables
No.	**Short text**			
169	Conductivity measurement failed		1. Check grounding conditions 2. Deactivate conductivity measurement	▪ Conductivity ▪ Corrected conductivity ▪ Measured values ▪ Density ▪ Electronics temperature ▪ Flow velocity ▪ Mass flow ▪ **Corrected volume flow** option ▪ Temperature ▪ Volume flow
	Measured variable status			
	Quality	Good		
	Quality substatus	Ok		
	Coding (hex)	0x80 to 0x83		
	Status signal	M		
	Diagnostic behavior	Warning		

Diagnostic information			Remedy instructions	Influenced measured variables
No.	Short text			
170	Coil resistance faulty		Check ambient and process temperature	▪ Conductivity ▪ Corrected conductivity ▪ Measured values ▪ Density ▪ Electronics temperature ▪ Flow velocity ▪ Mass flow ▪ **Corrected volume flow** option ▪ Temperature ▪ Volume flow
	Measured variable status			
	Quality	Good		
	Quality substatus	Ok		
	Coding (hex)	0x80 to 0x83		
	Status signal	F		
	Diagnostic behavior	Alarm		

Diagnostic information			Remedy instructions	Influenced measured variables
No.	Short text			
180	Temperature sensor defective		1. Check sensor connections 2. Replace sensor cable or sensor 3. Turn off temperature measurement	▪ Conductivity ▪ Corrected conductivity ▪ Measured values ▪ Density ▪ Electronics temperature ▪ Flow velocity ▪ Mass flow ▪ **Corrected volume flow** option ▪ Temperature ▪ Volume flow
	Measured variable status			
	Quality	Good		
	Quality substatus	Ok		
	Coding (hex)	0x80 to 0x83		
	Status signal	F		
	Diagnostic behavior	Warning		

Diagnostic information			Remedy instructions	Influenced measured variables
No.	Short text			
181	Sensor connection faulty		1. Check sensor cable and sensor 2. Execute Heartbeat Verification 3. Replace sensor cable or sensor	▪ Conductivity ▪ Corrected conductivity ▪ Measured values ▪ Density ▪ Electronics temperature ▪ Flow velocity ▪ Mass flow ▪ **Corrected volume flow** option ▪ Temperature ▪ Volume flow
	Measured variable status			
	Quality	Good		
	Quality substatus	Ok		
	Coding (hex)	0x80 to 0x83		
	Status signal	F		
	Diagnostic behavior	Alarm		

12.7.2 Diagnostic of electronic

Diagnostic information			Remedy instructions	Influenced measured variables
No.	Short text			
201	Electronics faulty		1. Restart device 2. Replace electronics	▪ Conductivity ▪ Corrected conductivity ▪ Measured values ▪ Density ▪ Electronics temperature ▪ Flow velocity ▪ Mass flow ▪ **Corrected volume flow** option ▪ Temperature ▪ Volume flow
	Measured variable status			
	Quality	Good		
	Quality substatus	Ok		
	Coding (hex)	0x80 to 0x83		
	Status signal	F		
	Diagnostic behavior	Alarm		

Diagnostic information			Remedy instructions	Influenced measured variables
No.	Short text			
242	Firmware incompatible		1. Check firmware version 2. Flash or replace electronic module	▪ Conductivity ▪ Corrected conductivity ▪ Measured values ▪ Density ▪ Electronics temperature ▪ Flow velocity ▪ Mass flow ▪ **Corrected volume flow** option ▪ Temperature ▪ Volume flow
	Measured variable status			
	Quality	Good		
	Quality substatus	Ok		
	Coding (hex)	0x80 to 0x83		
	Status signal	F		
	Diagnostic behavior	Alarm		

Diagnostic information			Remedy instructions	Influenced measured variables
No.	Short text			
252	Module incompatible		1. Check electronic modules 2. Check if correct modules are available (e.g. NEx, Ex) 3. Replace electronic modules	▪ Conductivity ▪ Corrected conductivity ▪ Measured values ▪ Density ▪ Electronics temperature ▪ Flow velocity ▪ Mass flow ▪ **Corrected volume flow** option ▪ Temperature ▪ Volume flow
	Measured variable status			
	Quality	Good		
	Quality substatus	Ok		
	Coding (hex)	0x80 to 0x83		
	Status signal	F		
	Diagnostic behavior	Alarm		

Diagnostic information			Remedy instructions	Influenced measured variables
No.	Short text			
262	Module connection interrupted		1. Check or replace connection cable between sensor electronic module (ISEM) and main electronics 2. Check or replace ISEM or main electronics	▪ Conductivity ▪ Corrected conductivity ▪ Measured values ▪ Density ▪ Electronics temperature ▪ Flow velocity ▪ Mass flow ▪ **Corrected volume flow** option ▪ Temperature ▪ Volume flow
	Measured variable status			
	Quality	Good		
	Quality substatus	Ok		
	Coding (hex)	0x80 to 0x83		
	Status signal	F		
	Diagnostic behavior	Alarm		

Diagnostic information			Remedy instructions	Influenced measured variables
No.	Short text			
270	Main electronics defective		1. Restart device 2. Replace main electronic module	▪ Conductivity ▪ Corrected conductivity ▪ Measured values ▪ Density ▪ Electronics temperature ▪ Flow velocity ▪ Mass flow ▪ **Corrected volume flow** option ▪ Temperature ▪ Volume flow
	Measured variable status			
	Quality	Good		
	Quality substatus	Ok		
	Coding (hex)	0x80 to 0x83		
	Status signal	F		
	Diagnostic behavior	Alarm		

Diagnostic information			Remedy instructions	Influenced measured variables
No.	Short text			
271	Main electronics faulty		1. Restart device 2. Replace main electronic module	▪ Conductivity ▪ Corrected conductivity ▪ Measured values ▪ Density ▪ Electronics temperature ▪ Flow velocity ▪ Mass flow ▪ **Corrected volume flow** option ▪ Temperature ▪ Volume flow
	Measured variable status			
	Quality	Good		
	Quality substatus	Ok		
	Coding (hex)	0x80 to 0x83		
	Status signal	F		
	Diagnostic behavior	Alarm		

Diagnostic information			Remedy instructions	Influenced measured variables
No.	Short text			
272	Main electronics faulty		Restart device	▪ Conductivity ▪ Corrected conductivity ▪ Measured values ▪ Density ▪ Electronics temperature ▪ Flow velocity ▪ Mass flow ▪ **Corrected volume flow** option ▪ Temperature ▪ Volume flow
	Measured variable status			
	Quality	Good		
	Quality substatus	Ok		
	Coding (hex)	0x80 to 0x83		
	Status signal	F		
	Diagnostic behavior	Alarm		

Diagnostic information			Remedy instructions	Influenced measured variables
No.	Short text			
273	Main electronics defective		1. Pay attention to display emergency operation 2. Replace main electronics	▪ Conductivity ▪ Corrected conductivity ▪ Measured values ▪ Density ▪ Electronics temperature ▪ Flow velocity ▪ Mass flow ▪ **Corrected volume flow** option ▪ Temperature ▪ Volume flow
	Measured variable status			
	Quality	Good		
	Quality substatus	Ok		
	Coding (hex)	0x80 to 0x83		
	Status signal	F		
	Diagnostic behavior	Alarm		

Diagnostic information			Remedy instructions	Influenced measured variables
No.	Short text			
275	I/O module defective		Change I/O module	▪ Conductivity ▪ Corrected conductivity ▪ Measured values ▪ Density ▪ Electronics temperature ▪ Flow velocity ▪ Mass flow ▪ **Corrected volume flow** option ▪ Temperature ▪ Volume flow
	Measured variable status			
	Quality	Good		
	Quality substatus	Ok		
	Coding (hex)	0x80 to 0x83		
	Status signal	F		
	Diagnostic behavior	Alarm		

Diagnostic information			Remedy instructions	Influenced measured variables
No.	Short text			
276	I/O module faulty		1. Restart device 2. Change I/O module	▪ Conductivity ▪ Corrected conductivity ▪ Measured values ▪ Density ▪ Electronics temperature ▪ Flow velocity ▪ Mass flow ▪ **Corrected volume flow** option ▪ Temperature ▪ Volume flow
	Measured variable status			
	Quality	Good		
	Quality substatus	Ok		
	Coding (hex)	0x80 to 0x83		
	Status signal	F		
	Diagnostic behavior	Alarm		

Diagnostic information			Remedy instructions	Influenced measured variables
No.	Short text			
283	Memory content inconsistent		Restart device	▪ Conductivity ▪ Corrected conductivity ▪ Measured values ▪ Density ▪ Electronics temperature ▪ Flow velocity ▪ Mass flow ▪ **Corrected volume flow** option ▪ Temperature ▪ Volume flow
	Measured variable status			
	Quality	Good		
	Quality substatus	Ok		
	Coding (hex)	0x80 to 0x83		
	Status signal	F		
	Diagnostic behavior	Alarm		

Diagnostic information			Remedy instructions	Influenced measured variables
No.	Short text			
302	Device verification active		Device verification active, please wait.	▪ Conductivity ▪ Corrected conductivity ▪ Measured values ▪ Density ▪ Electronics temperature ▪ Flow velocity ▪ Mass flow ▪ **Corrected volume flow** option ▪ Temperature ▪ Volume flow
	Measured variable status [from the factory] [1]			
	Quality	Good		
	Quality substatus	Function check		
	Coding (hex)	0xBC to 0xBF		
	Status signal	C		
	Diagnostic behavior	Warning		

1) Diagnostic behavior can be changed. This causes the overall status of the measured variable to change.

Diagnostic information			Remedy instructions	Influenced measured variables
No.	Short text			
303	I/O 1 to n configuration changed		1. Apply I/O module configuration (parameter 'Apply I/O configuration') 2. Afterwards reload device description and check wiring	–
	Measured variable status			
	Quality	Good		
	Quality substatus	Ok		
	Coding (hex)	0x80 to 0x83		
	Status signal	M		
	Diagnostic behavior	Warning		

Diagnostic information			Remedy instructions	Influenced measured variables
No.	Short text			
311	Sensor electronics (ISEM) faulty		Maintenance required! Do not reset device	▪ Conductivity ▪ Corrected conductivity ▪ Measured values ▪ Density ▪ Electronics temperature ▪ Flow velocity ▪ Mass flow ▪ **Corrected volume flow** option ▪ Temperature ▪ Volume flow
	Measured variable status			
	Quality	Good		
	Quality substatus	Ok		
	Coding (hex)	0x80 to 0x83		
	Status signal	M		
	Diagnostic behavior	Warning		

Diagnostic information			Remedy instructions	Influenced measured variables
No.	Short text			
330	Flash file invalid		1. Update firmware of device 2. Restart device	▪ Conductivity ▪ Corrected conductivity ▪ Measured values ▪ Density ▪ Electronics temperature ▪ Flow velocity ▪ Mass flow ▪ **Corrected volume flow** option ▪ Temperature ▪ Volume flow
	Measured variable status			
	Quality	Good		
	Quality substatus	Ok		
	Coding (hex)	0x80 to 0x83		
	Status signal	M		
	Diagnostic behavior	Warning		

Diagnostic information			Remedy instructions	Influenced measured variables
No.	Short text			
331	Firmware update failed		1. Update firmware of device 2. Restart device	▪ Conductivity ▪ Corrected conductivity ▪ Measured values ▪ Density ▪ Electronics temperature ▪ Flow velocity ▪ Mass flow ▪ **Corrected volume flow** option ▪ Temperature ▪ Volume flow
	Measured variable status			
	Quality	Good		
	Quality substatus	Ok		
	Coding (hex)	0x80 to 0x83		
	Status signal	F		
	Diagnostic behavior	Warning		

Diagnostic information			Remedy instructions	Influenced measured variables
No.	Short text			
332	Writing in HistoROM backup failed		1. Replace user interface board 2. Ex d/XP: replace transmitter	▪ Conductivity ▪ Corrected conductivity ▪ Measured values ▪ Density ▪ Electronics temperature ▪ Flow velocity ▪ Mass flow ▪ **Corrected volume flow** option ▪ Temperature ▪ Volume flow
	Measured variable status			
	Quality	Good		
	Quality substatus	Ok		
	Coding (hex)	0x80 to 0x83		
	Status signal	F		
	Diagnostic behavior	Alarm		

Diagnostic information			Remedy instructions	Influenced measured variables
No.	**Short text**			
361	I/O module 1 to n faulty		1. Restart device 2. Check electronic modules 3. Change I/O module or main electronics	▪ Conductivity ▪ Corrected conductivity ▪ Measured values ▪ Density ▪ Electronics temperature ▪ Flow velocity ▪ Mass flow ▪ **Corrected volume flow** option ▪ Temperature ▪ Volume flow
	Measured variable status			
	Quality	Good		
	Quality substatus	Ok		
	Coding (hex)	0x80 to 0x83		
	Status signal	F		
	Diagnostic behavior	Alarm		

Diagnostic information			Remedy instructions	Influenced measured variables
No.	**Short text**			
372	Sensor electronics (ISEM) faulty		1. Restart device 2. Check if failure recurs 3. Replace sensor electronic module (ISEM)	▪ Conductivity ▪ Corrected conductivity ▪ Measured values ▪ Density ▪ Electronics temperature ▪ Flow velocity ▪ Mass flow ▪ **Corrected volume flow** option ▪ Temperature ▪ Volume flow
	Measured variable status			
	Quality	Good		
	Quality substatus	Ok		
	Coding (hex)	0x80 to 0x83		
	Status signal	F		
	Diagnostic behavior	Alarm		

Diagnostic information			Remedy instructions	Influenced measured variables
No.	**Short text**			
373	Sensor electronics (ISEM) faulty		Transfer data or reset device	▪ Conductivity ▪ Corrected conductivity ▪ Measured values ▪ Density ▪ Electronics temperature ▪ Flow velocity ▪ Mass flow ▪ **Corrected volume flow** option ▪ Temperature ▪ Volume flow
	Measured variable status			
	Quality	Good		
	Quality substatus	Ok		
	Coding (hex)	0x80 to 0x83		
	Status signal	F		
	Diagnostic behavior	Alarm		

Diagnostic information			Remedy instructions	Influenced measured variables
No.	**Short text**			
375	I/O- 1 to n communication failed		1. Restart device 2. Check if failure recurs 3. Replace module rack inclusive electronic modules	▪ Conductivity ▪ Corrected conductivity ▪ Measured values ▪ Density ▪ Electronics temperature ▪ Flow velocity ▪ Mass flow ▪ **Corrected volume flow** option ▪ Temperature ▪ Volume flow
	Measured variable status			
	Quality	Good		
	Quality substatus	Ok		
	Coding (hex)	0x80 to 0x83		
	Status signal	F		
	Diagnostic behavior	Alarm		

Diagnostic information			Remedy instructions	Influenced measured variables
No.	Short text			
376	Sensor electronics (ISEM) faulty		1. Replace sensor electronic module (ISEM) 2. Turn off diagnostic message	▪ Conductivity ▪ Corrected conductivity ▪ Measured values ▪ Density ▪ Electronics temperature ▪ Flow velocity ▪ Mass flow ▪ **Corrected volume flow** option ▪ Temperature ▪ Volume flow
	Measured variable status [from the factory] 1)			
	Quality	Good		
	Quality substatus	Ok		
	Coding (hex)	0x80 to 0x83		
	Status signal	S		
	Diagnostic behavior	Warning		

1) Diagnostic behavior can be changed. This causes the overall status of the measured variable to change.

Diagnostic information			Remedy instructions	Influenced measured variables
No.	Short text			
377	Electrode signal faulty		1. Activate empty pipe detection 2. Check partial filled pipe and installation direction 3. Check sensor cabling 4. Deactivate diagnostics 377	▪ Conductivity ▪ Corrected conductivity ▪ Measured values ▪ Density ▪ Electronics temperature ▪ Flow velocity ▪ Mass flow ▪ **Corrected volume flow** option ▪ Temperature ▪ Volume flow
	Measured variable status [from the factory] 1)			
	Quality	Good		
	Quality substatus	Ok		
	Coding (hex)	0x80 to 0x83		
	Status signal	S		
	Diagnostic behavior	Warning		

1) Diagnostic behavior can be changed. This causes the overall status of the measured variable to change.

Diagnostic information			Remedy instructions	Influenced measured variables
No.	Short text			
378	Supply voltage ISEM faulty		1. If available: Check connection cable between sensor and transmitter 2. Replace main electronic module 3. Replace sensor electronic module (ISEM)	▪ Conductivity ▪ Corrected conductivity ▪ Measured values ▪ Density ▪ Electronics temperature ▪ Flow velocity ▪ Mass flow ▪ **Corrected volume flow** option ▪ Temperature ▪ Volume flow
	Measured variable status			
	Quality	Good		
	Quality substatus	Ok		
	Coding (hex)	0x80 to 0x83		
	Status signal	F		
	Diagnostic behavior	Alarm		

Diagnostic information			Remedy instructions	Influenced measured variables
No.	Short text			
382	Data storage		1. Insert T-DAT 2. Replace T-DAT	▪ Conductivity ▪ Corrected conductivity ▪ Measured values ▪ Density ▪ Electronics temperature ▪ Flow velocity ▪ Mass flow ▪ **Corrected volume flow** option ▪ Temperature ▪ Volume flow
	Measured variable status			
	Quality	Good		
	Quality substatus	Ok		
	Coding (hex)	0x80 to 0x83		
	Status signal	F		
	Diagnostic behavior	Alarm		

Diagnostic information			Remedy instructions	Influenced measured variables
No.	Short text			
383	Memory content		Reset device	▪ Conductivity ▪ Corrected conductivity ▪ Measured values ▪ Density ▪ Electronics temperature ▪ Flow velocity ▪ Mass flow ▪ **Corrected volume flow** option ▪ Temperature ▪ Volume flow
	Measured variable status			
	Quality	Good		
	Quality substatus	Ok		
	Coding (hex)	0x80 to 0x83		
	Status signal	F		
	Diagnostic behavior	Alarm		

Diagnostic information			Remedy instructions	Influenced measured variables
No.	Short text			
387	HistoROM data faulty		Contact service organization	▪ Conductivity ▪ Corrected conductivity ▪ Measured values ▪ Density ▪ Electronics temperature ▪ Flow velocity ▪ Mass flow ▪ **Corrected volume flow** option ▪ Temperature ▪ Volume flow
	Measured variable status			
	Quality	Good		
	Quality substatus	Ok		
	Coding (hex)	0x80 to 0x83		
	Status signal	F		
	Diagnostic behavior	Alarm		

12.7.3 Diagnostic of configuration

Diagnostic information			Remedy instructions	Influenced measured variables
No.	Short text			
410	Data transfer failed		1. Retry data transfer 2. Check connection	▪ Conductivity ▪ Corrected conductivity ▪ Measured values ▪ Density ▪ Electronics temperature ▪ Flow velocity ▪ Mass flow ▪ **Corrected volume flow** option ▪ Temperature ▪ Volume flow
	Measured variable status			
	Quality	Good		
	Quality substatus	Ok		
	Coding (hex)	0x80 to 0x83		
	Status signal	F		
	Diagnostic behavior	Alarm		

Diagnostic information			Remedy instructions	Influenced measured variables
No.	Short text			
412	Processing download		Download active, please wait	▪ Conductivity ▪ Corrected conductivity ▪ Measured values ▪ Density ▪ Electronics temperature ▪ Flow velocity ▪ Mass flow ▪ **Corrected volume flow** option ▪ Temperature ▪ Volume flow
	Measured variable status			
	Quality	Good		
	Quality substatus	Ok		
	Coding (hex)	0x80 to 0x83		
	Status signal	C		
	Diagnostic behavior	Warning		

Diagnostic information			Remedy instructions	Influenced measured variables
No.	Short text			
431	Trim 1 to n required		Carry out trim	–
	Measured variable status			
	Quality	Good		
	Quality substatus	Ok		
	Coding (hex)	0x80 to 0x83		
	Status signal	C		
	Diagnostic behavior	Warning		

Diagnostic information			Remedy instructions	Influenced measured variables
No.	Short text			
437	Configuration incompatible		1. Update firmware 2. Execute factory reset	▪ Conductivity ▪ Corrected conductivity ▪ Measured values ▪ Density ▪ Electronics temperature ▪ Flow velocity ▪ Mass flow ▪ **Corrected volume flow** option ▪ Temperature ▪ Volume flow
	Measured variable status			
	Quality	Good		
	Quality substatus	Ok		
	Coding (hex)	0x80 to 0x83		
	Status signal	F		
	Diagnostic behavior	Alarm		

Diagnostic information			Remedy instructions	Influenced measured variables
No.	Short text			
438	Dataset different		1. Check dataset file 2. Check device parameterization 3. Download new device parameterization	▪ Conductivity ▪ Corrected conductivity ▪ Measured values ▪ Density ▪ Electronics temperature ▪ Flow velocity ▪ Mass flow ▪ **Corrected volume flow** option ▪ Temperature ▪ Volume flow
	Measured variable status			
	Quality	Good		
	Quality substatus	Ok		
	Coding (hex)	0x80 to 0x83		
	Status signal	M		
	Diagnostic behavior	Warning		

Diagnostic information			Remedy instructions	Influenced measured variables
No.	Short text			
441	Current output 1 to n saturated		1. Check current output settings 2. Check process	–
	Measured variable status			
	Quality	Good		
	Quality substatus	Ok		
	Coding (hex)	0x80 to 0x83		
	Status signal	S		
	Diagnostic behavior	Warning		

Diagnostic information			Remedy instructions	Influenced measured variables
No.	Short text			
442	Frequency output 1 saturated		1. Check frequency output settings 2. Check process	–
	Measured variable status			
	Quality	Good		
	Quality substatus	Ok		
	Coding (hex)	0x80 to 0x83		
	Status signal	S		
	Diagnostic behavior	Warning		

Diagnostic information			Remedy instructions	Influenced measured variables
No.	Short text			
443	Pulse output 1 saturated		1. Check pulse output settings 2. Check process	–
	Measured variable status [from the factory] [1]			
	Quality	Good		
	Quality substatus	Ok		
	Coding (hex)	0x80 to 0x83		
	Status signal	S		
	Diagnostic behavior	Warning		

1) Diagnostic behavior can be changed. This causes the overall status of the measured variable to change.

Diagnostic information			Remedy instructions	Influenced measured variables
No.	Short text			
444	Current input 1 to n saturated		1. Check current input settings 2. Check connected device 3. Check process	Measured values
	Measured variable status [from the factory] [1]			
	Quality	Good		
	Quality substatus	Ok		
	Coding (hex)	0x80 to 0x83		
	Status signal	S		
	Diagnostic behavior	Warning		

1) Diagnostic behavior can be changed. This causes the overall status of the measured variable to change.

Diagnostic information			Remedy instructions	Influenced measured variables
No.	Short text			
453	Flow override active		Deactivate flow override	▪ Conductivity ▪ Corrected conductivity ▪ Density ▪ Electronics temperature ▪ Flow velocity ▪ Mass flow ▪ **Corrected volume flow** option ▪ Temperature ▪ Volume flow
	Measured variable status			
	Quality	Good		
	Quality substatus	Ok		
	Coding (hex)	0x80 to 0x83		
	Status signal	C		
	Diagnostic behavior	Warning		

Diagnostic information			Remedy instructions	Influenced measured variables
No.	Short text			
484	Failure mode simulation active		Deactivate simulation	▪ Conductivity ▪ Corrected conductivity ▪ Density ▪ Electronics temperature ▪ Flow velocity ▪ Mass flow ▪ **Corrected volume flow** option ▪ Temperature ▪ Volume flow
	Measured variable status			
	Quality	Good		
	Quality substatus	Ok		
	Coding (hex)	0x80 to 0x83		
	Status signal	C		
	Diagnostic behavior	Alarm		

Diagnostic information			Remedy instructions	Influenced measured variables
No.	Short text			
485	Process variable simulation active		Deactivate simulation	▪ Conductivity ▪ Corrected conductivity ▪ Density ▪ Electronics temperature ▪ Flow velocity ▪ Mass flow ▪ **Corrected volume flow** option ▪ Temperature ▪ Volume flow
	Measured variable status			
	Quality	Good		
	Quality substatus	Ok		
	Coding (hex)	0x80 to 0x83		
	Status signal	C		
	Diagnostic behavior	Warning		

Diagnostic information			Remedy instructions	Influenced measured variables
No.	Short text			
486	Current input 1 to n simulation active		Deactivate simulation	Measured values
	Measured variable status			
	Quality	Good		
	Quality substatus	Ok		
	Coding (hex)	0x80 to 0x83		
	Status signal	C		
	Diagnostic behavior	Warning		

Diagnostic information			Remedy instructions	Influenced measured variables
No.	Short text			
491	Current output 1 to n simulation active		Deactivate simulation	–
	Measured variable status			
	Quality	Good		
	Quality substatus	Ok		
	Coding (hex)	0x80 to 0x83		
	Status signal	C		
	Diagnostic behavior	Warning		

Diagnostic information			Remedy instructions	Influenced measured variables
No.	Short text			
492	Frequency output 1 to n simulation active		Deactivate simulation frequency output	–
	Measured variable status			
	Quality	Good		
	Quality substatus	Ok		
	Coding (hex)	0x80 to 0x83		
	Status signal	C		
	Diagnostic behavior	Warning		

Diagnostic information			Remedy instructions	Influenced measured variables
No.	Short text			
493	Pulse output simulation active		Deactivate simulation pulse output	–
	Measured variable status			
	Quality	Good		
	Quality substatus	Ok		
	Coding (hex)	0x80 to 0x83		
	Status signal	C		
	Diagnostic behavior	Warning		

Diagnostic information			Remedy instructions	Influenced measured variables
No.	Short text			
494	Switch output 1 to n simulation active		Deactivate simulation switch output	–
	Measured variable status			
	Quality	Good		
	Quality substatus	Ok		
	Coding (hex)	0x80 to 0x83		
	Status signal	C		
	Diagnostic behavior	Warning		

Diagnostic information			Remedy instructions	Influenced measured variables
No.	Short text			
495	Diagnostic event simulation active		Deactivate simulation	–
	Measured variable status			
	Quality	Good		
	Quality substatus	Ok		
	Coding (hex)	0x80 to 0x83		
	Status signal	C		
	Diagnostic behavior	Warning		

Diagnostic information			Remedy instructions	Influenced measured variables
No.	Short text			
496	Status input 1 to n simulation active		Deactivate simulation status input	–
	Measured variable status			
	Quality	Good		
	Quality substatus	Ok		
	Coding (hex)	0x80 to 0x83		
	Status signal	C		
	Diagnostic behavior	Warning		

Diagnostic information			Remedy instructions	Influenced measured variables
No.	Short text			
511	Sensor setting error		1. Check measuring period and integration time 2. Check sensor properties	▪ Conductivity ▪ Corrected conductivity ▪ Measured values ▪ Density ▪ Electronics temperature ▪ Flow velocity ▪ Mass flow ▪ **Corrected volume flow** option ▪ Temperature ▪ Volume flow
	Measured variable status			
	Quality	Good		
	Quality substatus	Ok		
	Coding (hex)	0x80 to 0x83		
	Status signal	C		
	Diagnostic behavior	Alarm		

Diagnostic information			Remedy instructions	Influenced measured variables
No.	Short text			
512	ECC recovery time exceeded		1. Check ECC recovery time 2. Turn off ECC	▪ Conductivity ▪ Corrected conductivity ▪ Measured values ▪ Density ▪ Electronics temperature ▪ Flow velocity ▪ Mass flow ▪ **Corrected volume flow** option ▪ Temperature ▪ Volume flow
	Measured variable status			
	Quality	Good		
	Quality substatus	Ok		
	Coding (hex)	0x80 to 0x83		
	Status signal	F		
	Diagnostic behavior	Alarm		

Diagnostic information			Remedy instructions	Influenced measured variables
No.	Short text			
520	I/O 1 to n hardware configuration invalid		1. Check I/O hardware configuration 2. Replace wrong I/O module 3. Plug the module of double pulse output on correct slot	–
	Measured variable status			
	Quality	Good		
	Quality substatus	Ok		
	Coding (hex)	0x80 to 0x83		
	Status signal	F		
	Diagnostic behavior	Alarm		

Diagnostic information			Remedy instructions	Influenced measured variables
No.	**Short text**			
530	Electrode cleaning active		Switch off electrode cleaning	▪ Conductivity ▪ Corrected conductivity ▪ Measured values ▪ Density ▪ Electronics temperature ▪ Flow velocity ▪ Mass flow ▪ **Corrected volume flow** option ▪ Temperature ▪ Volume flow
	Measured variable status			
	Quality	Good		
	Quality substatus	Ok		
	Coding (hex)	0x80 to 0x83		
	Status signal	C		
	Diagnostic behavior	Warning		

Diagnostic information			Remedy instructions	Influenced measured variables
No.	**Short text**			
531	Empty pipe adjustment faulty		Execute EPD adjustment	▪ Conductivity ▪ Corrected conductivity ▪ Measured values ▪ Density ▪ Electronics temperature ▪ Flow velocity ▪ Mass flow ▪ **Corrected volume flow** option ▪ Temperature ▪ Volume flow
	Measured variable status [from the factory] [1]			
	Quality	Good		
	Quality substatus	Ok		
	Coding (hex)	0x80 to 0x83		
	Status signal	S		
	Diagnostic behavior	Warning		

1) Diagnostic behavior can be changed. This causes the overall status of the measured variable to change.

Diagnostic information			Remedy instructions	Influenced measured variables
No.	**Short text**			
537	Configuration		1. Check IP addresses in network 2. Change IP address	–
	Measured variable status			
	Quality	Good		
	Quality substatus	Ok		
	Coding (hex)	0x80 to 0x83		
	Status signal	F		
	Diagnostic behavior	Warning		

Diagnostic information			Remedy instructions	Influenced measured variables
No.	**Short text**			
594	Relay output 1 to n simulation active		Deactivate simulation switch output	–
	Measured variable status			
	Quality	Good		
	Quality substatus	Ok		
	Coding (hex)	0x80 to 0x83		
	Status signal	C		
	Diagnostic behavior	Warning		

12.7.4 Diagnostic of process

Diagnostic information			Remedy instructions	Influenced measured variables
No.	Short text			
803	Loop current 1 faulty		1. Check wiring 2. Change I/O module	–
	Measured variable status			
	Quality	Good		
	Quality substatus	Ok		
	Coding (hex)	0x80 to 0x83		
	Status signal	F		
	Diagnostic behavior	Alarm		

Diagnostic information			Remedy instructions	Influenced measured variables
No.	Short text			
832	Electronics temperature too high		Reduce ambient temperature	▪ Conductivity ▪ Corrected conductivity ▪ Measured values ▪ Density ▪ Electronics temperature ▪ Flow velocity ▪ Mass flow ▪ **Corrected volume flow** option ▪ Temperature ▪ Volume flow
	Measured variable status [from the factory] [1]			
	Quality	Good		
	Quality substatus	Ok		
	Coding (hex)	0x80 to 0x83		
	Status signal	S		
	Diagnostic behavior	Warning		

1) Diagnostic behavior can be changed. This causes the overall status of the measured variable to change.

Diagnostic information			Remedy instructions	Influenced measured variables
No.	Short text			
833	Electronics temperature too low		Increase ambient temperature	▪ Conductivity ▪ Corrected conductivity ▪ Measured values ▪ Density ▪ Electronics temperature ▪ Flow velocity ▪ Mass flow ▪ **Corrected volume flow** option ▪ Temperature ▪ Volume flow
	Measured variable status [from the factory] [1]			
	Quality	Good		
	Quality substatus	Ok		
	Coding (hex)	0x80 to 0x83		
	Status signal	S		
	Diagnostic behavior	Warning		

1) Diagnostic behavior can be changed. This causes the overall status of the measured variable to change.

Diagnostic information			Remedy instructions	Influenced measured variables
No.	Short text			
834	Process temperature too high		Reduce process temperature	▪ Conductivity ▪ Corrected conductivity ▪ Density ▪ Electronics temperature ▪ Flow velocity ▪ Mass flow ▪ **Corrected volume flow** option ▪ Temperature ▪ Volume flow
	Measured variable status [from the factory] [1]			
	Quality	Good		
	Quality substatus	Ok		
	Coding (hex)	0x80 to 0x83		
	Status signal	S		
	Diagnostic behavior	Warning		

1) Diagnostic behavior can be changed. This causes the overall status of the measured variable to change.

Diagnostic information			Remedy instructions	Influenced measured variables
No.	Short text			
835	Process temperature too low		Increase process temperature	▪ Conductivity ▪ Corrected conductivity ▪ Density ▪ Electronics temperature ▪ Flow velocity ▪ Mass flow ▪ **Corrected volume flow** option ▪ Temperature ▪ Volume flow
	Measured variable status [from the factory] [1]			
	Quality	Good		
	Quality substatus	Ok		
	Coding (hex)	0x80 to 0x83		
	Status signal	S		
	Diagnostic behavior	Warning		

1) Diagnostic behavior can be changed. This causes the overall status of the measured variable to change.

Diagnostic information			Remedy instructions	Influenced measured variables
No.	Short text			
842	Process value below limit		1. Decrease process value 2. Check application 3. Check sensor	▪ Conductivity ▪ Corrected conductivity ▪ Density ▪ Electronics temperature ▪ Flow velocity ▪ Mass flow ▪ **Corrected volume flow** option ▪ Temperature ▪ Volume flow
	Measured variable status [from the factory] [1]			
	Quality	Good		
	Quality substatus	Ok		
	Coding (hex)	0x80 to 0x83		
	Status signal	S		
	Diagnostic behavior	Warning		

1) Diagnostic behavior can be changed. This causes the overall status of the measured variable to change.

Diagnostic information			Remedy instructions	Influenced measured variables
No.	Short text			
882	Input signal faulty		1. Check input signal parameterization 2. Check external device 3. Check process conditions	▪ Conductivity ▪ Corrected conductivity ▪ Measured values ▪ Density ▪ Electronics temperature ▪ Flow velocity ▪ Mass flow ▪ **Corrected volume flow** option ▪ Temperature ▪ Volume flow
	Measured variable status			
	Quality	Bad		
	Quality substatus	Maintenance alarm		
	Coding (hex)	0x24 to 0x27		
	Status signal	F		
	Diagnostic behavior	Alarm		

Diagnostic information			Remedy instructions	Influenced measured variables
No.	Short text			
937	Sensor symmetry		1. Eliminate external magnetic field near sensor 2. Turn off diagnostic message	▪ Conductivity ▪ Corrected conductivity ▪ Measured values ▪ Density ▪ Electronics temperature ▪ Flow velocity ▪ Mass flow ▪ **Corrected volume flow** option ▪ Temperature ▪ Volume flow
	Measured variable status [from the factory] 1)			
	Quality	Good		
	Quality substatus	Ok		
	Coding (hex)	0x80 to 0x83		
	Status signal	S		
	Diagnostic behavior	Warning		

1) Diagnostic behavior can be changed. This causes the overall status of the measured variable to change.

Diagnostic information			Remedy instructions	Influenced measured variables
No.	Short text			
938	Coil current not stable		1. Check if external magnetic interference is present 2. Perform Heartbeat Verification 3. Check flow value	▪ Conductivity ▪ Corrected conductivity ▪ Measured values ▪ Density ▪ Electronics temperature ▪ Flow velocity ▪ Mass flow ▪ **Corrected volume flow** option ▪ Temperature ▪ Volume flow
	Measured variable status [from the factory] 1)			
	Quality	Good		
	Quality substatus	Ok		
	Coding (hex)	0x80 to 0x83		
	Status signal	F		
	Diagnostic behavior	Alarm		

1) Diagnostic behavior can be changed. This causes the overall status of the measured variable to change.

Diagnostic information			Remedy instructions	Influenced measured variables
No.	Short text			
961	Electrode potential out of specification		1. Check process conditions 2. Check ambient conditions	▪ Mass flow ▪ Status ▪ Volume flow
	Measured variable status [from the factory] 1)			
	Quality	Good		
	Quality substatus	Ok		
	Coding (hex)	0x80 to 0x83		
	Status signal	S		
	Diagnostic behavior	Warning		

1) Diagnostic behavior can be changed. This causes the overall status of the measured variable to change.

Diagnostic information			Remedy instructions	Influenced measured variables
No.	Short text			
962	Pipe empty		1. Perform full pipe adjustment 2. Perform empty pipe adjustment 3. Turn off empty pipe detection	▪ Conductivity ▪ Corrected conductivity ▪ Measured values ▪ Density ▪ Electronics temperature ▪ Flow velocity ▪ Mass flow ▪ **Corrected volume flow** option ▪ Temperature ▪ Volume flow
	Measured variable status [from the factory] [1]			
	Quality	Good		
	Quality substatus	Ok		
	Coding (hex)	0x80 to 0x83		
	Status signal	S		
	Diagnostic behavior	Warning		

1) Diagnostic behavior can be changed. This causes the overall status of the measured variable to change.

12.8 Pending diagnostic events

The **Diagnostics** menu allows the user to view the current diagnostic event and the previous diagnostic event separately.

Accessing the remedial action for a diagnostic event:
- Via local display → 140
- Via web browser → 142
- Via "FieldCare" operating tool → 143
- Via "DeviceCare" operating tool → 143

Other pending diagnostic events can be displayed in the **Diagnostic list** submenu → 166.

Navigation
"Diagnostics" menu

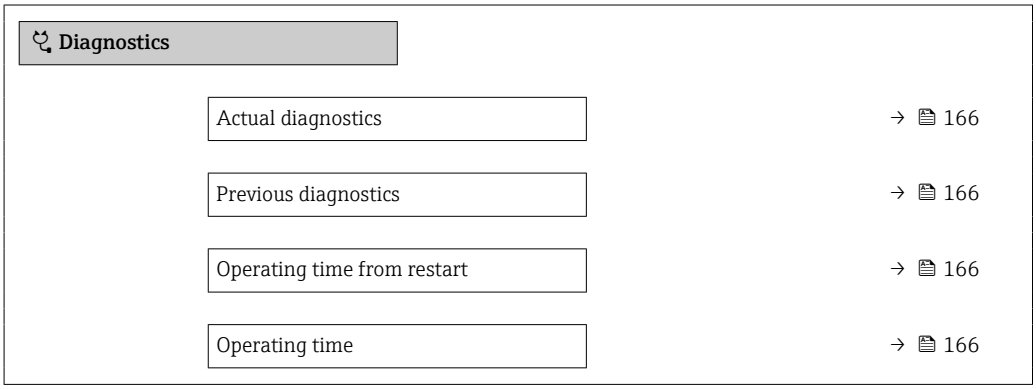

Parameter overview with brief description

Parameter	Prerequisite	Description	User interface
Actual diagnostics	A diagnostic event has occurred.	Shows the current occured diagnostic event along with its diagnostic information. If two or more messages occur simultaneously, the message with the highest priority is shown on the display.	Symbol for diagnostic behavior, diagnostic code and short message.
Previous diagnostics	Two diagnostic events have already occurred.	Shows the diagnostic event that occurred prior to the current diagnostic event along with its diagnostic information.	Symbol for diagnostic behavior, diagnostic code and short message.
Operating time from restart	–	Shows the time the device has been in operation since the last device restart.	Days (d), hours (h), minutes (m) and seconds (s)
Operating time	–	Indicates how long the device has been in operation.	Days (d), hours (h), minutes (m) and seconds (s)

12.9 Diagnostic list

Up to 5 currently pending diagnostic events are displayed in the **Diagnostic list** submenu along with the associated diagnostic information. If more than 5 diagnostic events are pending, the events with the highest priority are shown on the display.

Navigation path
Diagnostics → Diagnostic list

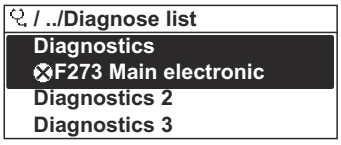

A0014006-EN

27 Using the example of the local display

Accessing the remedial action for a diagnostic event:
- Via local display → 140
- Via web browser → 142
- Via "FieldCare" operating tool → 143
- Via "DeviceCare" operating tool → 143

12.10 Event logbook

12.10.1 Reading out the event logbook

A chronological overview of the event messages that have occurred is provided in the **Event logbook** submenu.

Navigation path
Diagnostics menu → **Event logbook** submenu → Event logbook

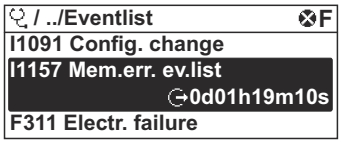

A0014008-EN

28 *Using the example of the local display*

- A maximum of 20 event messages can be displayed in chronological order.
- If the **Extended HistoROM** application package (order option) is enabled in the device, the event logbook can contain up to 100 entries.

The event history includes entries for:
- Diagnostic events → 146
- Information events → 167

In addition to the operating time when the event occurred, each event is also assigned a symbol that indicates whether the event has occurred or is finished:
- Diagnostic event
  - ⊖: Occurrence of the event
  - ⊖: End of the event
- Information event
  ⊖: Occurrence of the event

Accessing the remedial action for a diagnostic event:
- Via local display → 140
- Via web browser → 142
- Via "FieldCare" operating tool → 143
- Via "DeviceCare" operating tool → 143

Filtering the displayed event messages → 167

12.10.2 Filtering the event logbook

Using the **Filter options** parameter you can define which category of event message is displayed in the **Events list** submenu.

Navigation path
Diagnostics → Event logbook → Filter options

Filter categories
- All
- Failure (F)
- Function check (C)
- Out of specification (S)
- Maintenance required (M)
- Information (I)

12.10.3 Overview of information events

Unlike a diagnostic event, an information event is displayed in the event logbook only and not in the diagnostic list.

Info number	Info name
I1000	--------(Device ok)
I1079	Sensor changed
I1089	Power on
I1090	Configuration reset
I1091	Configuration changed

Info number	Info name
I1092	HistoROM backup deleted
I1137	Electronics changed
I1151	History reset
I1155	Reset electronics temperature
I1156	Memory error trend
I1157	Memory error event list
I1256	Display: access status changed
I1278	I/O module restarted
I1335	Firmware changed
I1351	Empty pipe detection adjustment failure
I1353	Empty pipe detection adjustment ok
I1361	Web server: login failed
I1397	Fieldbus: access status changed
I1398	CDI: access status changed
I1443	Build-up thickness not determined
I1444	Device verification passed
I1445	Device verification failed
I1457	Measurement error verification failed
I1459	I/O module verification failed
I1461	Sensor verification failed
I1462	Sensor electronic module verific. failed
I1512	Download started
I1513	Download finished
I1514	Upload started
I1515	Upload finished
I1618	I/O module 2 replaced
I1619	I/O module 3 replaced
I1621	I/O module 4 replaced
I1622	Calibration changed
I1624	All totalizers reset
I1625	Write protection activated
I1626	Write protection deactivated
I1627	Web server: login successful
I1628	Display: login successful
I1629	CDI: login successful
I1631	Web server access changed
I1632	Display: login failed
I1633	CDI: login failed
I1634	Reset to factory settings
I1635	Reset to delivery settings
I1639	Max. switch cycles number reached
I1649	Hardware write protection activated
I1650	Hardware write protection deactivated

Info number	Info name
I1712	New flash file received
I1725	Sensor electronic module (ISEM) changed
I1726	Configuration backup failed

12.11 Resetting the device

The entire device configuration or some of the configuration can be reset to a defined state with the **Device reset** parameter (→ 🗎 120).

12.11.1 Function scope of the "Device reset" parameter

Options	Description
Cancel	No action is executed and the user exits the parameter.
To delivery settings	Every parameter for which a customer-specific default setting was ordered is reset to the customer-specific value. All other parameters are reset to the factory setting.
Restart device	The restart resets every parameter with data stored in volatile memory (RAM) to the factory setting (e.g. measured value data). The device configuration remains unchanged.

12.12 Device information

The **Device information** submenu contains all parameters that display different information for device identification.

Navigation
"Diagnostics" menu → Device information

▶ Device information	
Device tag	→ 🗎 170
Serial number	→ 🗎 170
Firmware version	→ 🗎 170
Device name	→ 🗎 170
Manufacturer	→ 🗎 170
Order code	→ 🗎 170
Extended order code 1	→ 🗎 170
Extended order code 2	→ 🗎 170
Extended order code 3	→ 🗎 170
ENP version	→ 🗎 170

Parameter overview with brief description

Parameter	Description	User interface	Factory setting
Device tag	Shows name of measuring point.	Character string comprising numbers, letters and special characters	Promag
Serial number	Shows the serial number of the measuring device.	Max. 11-digit character string comprising letters and numbers.	–
Firmware version	Shows the device firmware version installed.	Character string in the format xx.yy.zz	–
Device name	Shows the name of the transmitter. The name can be found on the nameplate of the transmitter.	Promag 300/500	–
Device name		Character string comprising numbers, letters and special characters	Prowirl
Manufacturer	Displays the manufacturer.	Character string comprising numbers, letters and special characters	Endress+Hauser
Order code	Shows the device order code. The order code can be found on the nameplate of the sensor and transmitter in the "Order code" field.	Character string composed of letters, numbers and certain punctuation marks (e.g. /).	–
Extended order code 1	Shows the 1st part of the extended order code. The extended order code can also be found on the nameplate of the sensor and transmitter in the "Ext. ord. cd." field.	Character string	–
Extended order code 2	Shows the 2nd part of the extended order code. The extended order code can also be found on the nameplate of the sensor and transmitter in the "Ext. ord. cd." field.	Character string	–
Extended order code 3	Shows the 3rd part of the extended order code. The extended order code can also be found on the nameplate of the sensor and transmitter in the "Ext. ord. cd." field.	Character string	–
ENP version	Shows the version of the electronic nameplate (ENP).	Character string	2.02.00

12.13 Firmware history

Release date	Firmware version	Order code for "Firmware version"	Firmware Changes	Documentation type	Documentation
2023	01.00.zz	Option **61**	Original firmware	Operating instructions	BA02106D/06/EN/01.21

It is possible to flash the firmware to the current version or an existing previous version via the service interface.

For the compatibility of the firmware version with the installed device description files and operating tools, observe the information about the device in the "Manufacturer's information" document.

The manufacturer's information is available:
- In the Download Area of the Endress+Hauser Web site: www.endress.com → Downloads
- Specify the following details:
  - Product root: e.g. 5H3B
    The product root is the first part of the order code: see the nameplate on the device.
  - Text search: Manufacturer's information
  - Media type: Documentation – Technical Documentation

13 Maintenance

13.1 Maintenance tasks

No special maintenance work is required.

13.1.1 Cleaning

Cleaning of surfaces not in contact with the medium

1. Recommendation: Use a lint-free cloth that is either dry or slightly dampened using water.
2. Do not use sharp objects or aggressive cleaning agents that could damage surfaces (e.g. displays, housing) and seals.
3. Do not use high-pressure steam.
4. Ensure compliance with the protection class of the device.

NOTICE

Cleaning agents can damage the surfaces!

Incorrect cleaning agents can damage the surfaces!

- Do not use cleaning agents containing concentrated mineral acids, alkalis or organic solvents e.g. benzyl alcohol, methylene chloride, xylene, concentrated glycerol cleaners or acetone.

Cleaning of surfaces in contact with the medium

Note the following for cleaning and sterilization in place (CIP/SIP):

- Use only cleaning agents to which the materials in contact with the medium are sufficiently resistant.
- Observe the permitted maximum medium temperature.

13.1.2 Replacing seals

The sensor's seals (particularly aseptic molded seals) must be replaced periodically.

The interval between changes depends on the frequency of the cleaning cycles, the cleaning temperature and the medium temperature.

Replacement seals (accessory part) → 📄 205

13.2 Measuring and test equipment

Endress+Hauser offers a variety of measuring and testing equipment, such as Netilion or device tests.

Your Endress+Hauser Sales Center can provide detailed information on the services.

List of some of the measuring and testing equipment: → 📄 177

13.3 Maintenance services

Endress+Hauser offers a wide variety of services for maintenance such as recalibration, maintenance service or device tests.

Your Endress+Hauser Sales Center can provide detailed information on the services.

14 Repair

14.1 General notes

14.1.1 Repair and conversion concept

The Endress+Hauser repair and conversion concept provides for the following:
- The measuring devices have a modular design.
- Spare parts are grouped into logical kits with the associated Installation Instructions.
- Repairs are carried out by Endress+Hauser Service or by appropriately trained customers.
- Certified devices can only be converted to other certified devices by Endress+Hauser Service or at the factory.

14.1.2 Notes for repair and conversion

For repair and conversion of a measuring device, observe the following notes:
- ▶ Use only original Endress+Hauser spare parts.
- ▶ Carry out the repair according to the Installation Instructions.
- ▶ Observe the applicable standards, federal/national regulations, Ex documentation (XA) and certificates.
- ▶ Document all repairs and conversions and enter the details in Netilion Analytics.

14.2 Spare parts

Device Viewer (www.endress.com/deviceviewer):
All the spare parts for the measuring device, along with the order code, are listed here and can be ordered. If available, users can also download the associated Installation Instructions.

Measuring device serial number:
- Is located on the nameplate of the device.
- Can be read out via the **Serial number** parameter (→ 170) in the **Device information** submenu.

14.3 Repair services

Endress+Hauser offers a wide range of services.

Your Endress+Hauser Sales Center can provide detailed information on the services.

14.4 Return

The requirements for safe device return can vary depending on the device type and national legislation.

1. Refer to the web page for information: https://www.endress.com
2. If returning the device, pack the device in such a way that it is reliably protected against impact and external influences. The original packaging offers the best protection.

14.5 Disposal

If required by the Directive 2012/19/EU on waste electrical and electronic equipment (WEEE), the product is marked with the depicted symbol in order to minimize the disposal of WEEE as unsorted municipal waste. Do not dispose of products bearing this marking as unsorted municipal waste. Instead, return them to the manufacturer for disposal under the applicable conditions.

14.5.1 Removing the measuring instrument

1. Switch off the device.

WARNING

Danger to persons from process conditions!

- Beware of hazardous process conditions such as pressure in the measuring instrument, high temperatures or aggressive media.

2. Carry out the installation and connection steps from the "Installing the device" and "Connecting the device" sections in reverse order. Observe the safety instructions.

14.5.2 Disposing of the measuring instrument

WARNING

Danger to personnel and environment from fluids that are hazardous to health.

- Ensure that the measuring device and all cavities are free of fluid residues that are hazardous to health or the environment, e.g. substances that have permeated into crevices or diffused through plastic.

Observe the following notes during disposal:

- Observe valid federal/national regulations.
- Ensure proper separation and reuse of the device components.

15 Accessories

Various accessories, which can be ordered with the device or subsequently from Endress +Hauser, are available for the device. Detailed information on the order code in question is available from your local Endress+Hauser sales center or on the product page of the Endress+Hauser website: www.endress.com.

15.1 Device-specific accessories

15.1.1 For the transmitter

Accessory	Description
Proline 300 transmitter	Transmitter for replacement or storage. Use the order code to define the following specifications: ▪ Approvals ▪ Output ▪ Input ▪ Display/operation ▪ Housing ▪ Software Order code: 5X3BXX Installation Instructions EA01199D
Remote display and operating module DKX001	▪ If ordered directly with the measuring instrument: Order code for "Display; operation", option O "Remote display 4-line, illuminated; 10 m (30 ft) cable; touch control" ▪ If ordered separately: ▪ Measuring instrument: order code for "Display; operation", option M "W/o, prepared for remote display" ▪ DKX001: Via the separate product structure DKX001 ▪ If ordered subsequently: DKX001: Via the separate product structure DKX001 **Mounting bracket for DKX001** ▪ If ordered directly: order code for "Accessory enclosed", option RA "Mounting bracket, pipe 1/2'" ▪ If ordered subsequently: order number: 71340960 **Connecting cable (replacement cable)** Via the separate product structure: DKX002 Further information on display and operating module DKX001→ 198. Special Documentation SD01763D
External WLAN antenna	External WLAN antenna with 1.5 m (59.1 in) connecting cable and two angle brackets. Order code for "Accessory enclosed", option P8 "Wireless antenna wide area". ▪ The external WLAN antenna is not suitable for use in hygienic applications. ▪ Further information on the WLAN interface → 67. Order number: 71351317 Installation Instructions EA01238D
Protective cover	Is used to protect the measuring instrument from the effects of the weather: e.g. rainwater, excess heating from direct sunlight. Order number: 71343505 Installation Instructions EA01160D

15.1.2 For the sensor

Accessory	Description
Adapter set	Adapter connections for installing a Promag H instead of a Promag 30/33 A or Promag 30/33 H (DN 25). Scope of delivery: ▪ 2 process connections ▪ Screws ▪ Seals
Seal set	For the regular replacement of seals for the sensor.
Spacer	If replacing a DN 80/100 sensor in an existing installation, a spacer is needed if the new sensor is shorter.
Welding jig	Welding nipple as process connection: welding jig for installation in pipe.
Grounding rings	Used to ground the medium in lined measuring tubes to ensure proper measurement. Grounding rings can be ordered via the device order structure or configured and ordered as an accessory via the DK5HR order structure.
Mounting kit	Scope of delivery: ▪ 2 process connections ▪ Screws ▪ Seals
Wall mounting kit	Wall mounting kit for measuring instrument (only DN 2 to 25 (1/12 to 1"))

15.2 Communication-specific accessories

Accessories	Description
Fieldgate FXA42	Transmission of the measured values of connected 4 to 20 mA analog measuring instruments, as well as digital measuring instruments ▪ Technical Information TI01297S ▪ Operating Instructions BA01778S ▪ Product page: www.endress.com/fxa42
Field Xpert SMT50	The Field Xpert SMT50 tablet PC for device configuration enables mobile plant asset management in non-hazardous areas. It is suitable for commissioning and maintenance staff to manage field instruments with a digital communication interface and to record progress. This tablet PC is designed as an all-in-one solution with a preinstalled driver library and is an easy-to-use, touch-sensitive tool which can be used to manage field instruments throughout their entire life cycle. ▪ Technical Information TI01555S ▪ Operating Instructions BA02053S ▪ Product page: www.endress.com/smt50
Field Xpert SMT70	The Field Xpert SMT70 tablet PC for device configuration enables mobile plant asset management in hazardous and non-hazardous areas. It is suitable for commissioning and maintenance staff to manage field instruments with a digital communication interface and to record progress. This tablet PC is designed as an all-in-one solution with a preinstalled driver library and is an easy-to-use, touch-sensitive tool which can be used to manage field instruments throughout their entire life cycle. ▪ Technical Information TI01342S ▪ Operating Instructions BA01709S ▪ Product page: www.endress.com/smt70
Field Xpert SMT77	The Field Xpert SMT77 tablet PC for device configuration enables mobile plant asset management in areas categorized as Ex Zone 1. ▪ Technical Information TI01418S ▪ Operating Instructions BA01923S ▪ Product page: www.endress.com/smt77

15.3 Service-specific accessories

Accessories	Description
Applicator	Software for selecting and sizing Endress+Hauser measuring instruments: ▪ Choice of measuring instruments for industrial requirements ▪ Calculation of all the necessary data for identifying the optimum flowmeter: e.g. nominal diameter, pressure loss, flow velocity and measurement accuracy. ▪ Graphic display of the calculation results ▪ Determining the partial order code. Administration, documentation and access to all project-related data and parameters over the entire life cycle of a project. Applicator is available: Via the Internet: https://portal.endress.com/webapp/applicator
Netilion	IIoT ecosystem: Unlock knowledge With the Netilion IIoT ecosystem, Endress+Hauser allows you to optimize your plant performance, digitize workflows, share knowledge, and enhance collaboration. Drawing on decades of experience in process automation, Endress+Hauser offers process industries an IIoT ecosystem that provides customers with data-driven insights. These insights can be used to optimize processes, leading to increased plant availability, efficiency, and reliability - ultimately resulting in a more profitable plant. www.netilion.endress.com
FieldCare	FDT-based plant asset management tool from Endress+Hauser. It can configure all intelligent field units in your system and helps you manage them. By using the status information, it is also a simple but effective way of checking their status and condition. Operating Instructions BA00027S and BA00059S
DeviceCare	Tool to connect and configure Endress+Hauser field devices. ▪ Technical Information: TI01134S ▪ Innovation brochure: IN01047S

15.4 System components

Accessories	Description
Memograph M graphic data manager	The Memograph M graphic data manager provides information on all the relevant measured variables. Measured values are recorded correctly, limit values are monitored and measuring points analyzed. The data are stored in the 256 MB internal memory and also on a SD card or USB stick. ▪ Technical Information TI00133R ▪ Operating Instructions BA00247R
iTEMP	The temperature transmitters can be used in all applications and are suitable for the measurement of gases, steam and liquids. They can be used to read in the medium temperature. "Fields of Activity" document FA00006T

16 Technical data

16.1 Application

The measuring device is intended only for the flow measurement of liquids with a minimum conductivity of 5 µS/cm.

Depending on the version ordered, the measuring device can also measure potentially explosive, flammable, poisonous and oxidizing media.

To ensure that the device remains in proper operating condition for its service life, use the measuring device only for media against which the process-wetted materials are sufficiently resistant.

16.2 Function and system design

Measuring principle

Electromagnetic flow measurement on the basis of *Faraday's law of magnetic induction*.

Measuring system

The device consists of a transmitter and a sensor.

The device is available as a compact version:
The transmitter and sensor form a mechanical unit.

For information on the structure of the measuring instrument → 📖 13

16.3 Input

Measured variable

Direct measured variables

- Volume flow (proportional to induced voltage)
- Temperature [1)]
- Electrical conductivity

Calculated measured variables

- Mass flow
- Corrected volume flow
- Corrected electrical conductivity [1)]

Measuring range

Typically v = 0.01 to 10 m/s (0.03 to 33 ft/s) with the specified measurement accuracy

Flow characteristic values in SI units: DN 2 to 125 (1/12 to 5")

Nominal diameter		Recommended flow	Factory settings		
		min./max. full scale value (v ~ 0.3/10 m/s)	Full scale value current output (v ~ 2.5 m/s)	Pulse value (~ 2 pulse/s)	Low flow cut off (v ~ 0.04 m/s)
[mm]	[in]	[dm³/min]	[dm³/min]	[dm³]	[dm³/min]
2	1/12	0.06 to 1.8	0.5	0.005	0.01
4	5/32	0.25 to 7	2	0.025	0.05

1) Available only for nominal diameters DN 15 to 150 (½ to 6") and with the order code for "Sensor option", option CI "Medium temperature measurement".

Nominal diameter		Recommended flow	Factory settings		
		min./max. full scale value (v ~ 0.3/10 m/s)	Full scale value current output (v ~ 2.5 m/s)	Pulse value (~ 2 pulse/s)	Low flow cut off (v ~ 0.04 m/s)
[mm]	[in]	[dm³/min]	[dm³/min]	[dm³]	[dm³/min]
8	5/16	1 to 30	8	0.1	0.1
15	½	4 to 100	25	0.2	0.5
25 [1]	1	9 to 300	75	0.5	1
40	1 ½	25 to 700	200	1.5	3
50	2	35 to 1 100	300	2.5	5
65	–	60 to 2 000	500	5	8
80	3	90 to 3 000	750	5	12
100	4	145 to 4 700	1200	10	20
125	5	220 to 7 500	1850	15	30

1) The values apply for the product version: 5HxB26

Flow characteristic values in SI units: DN 150 (6")

Nominal diameter		Recommended flow	Factory settings		
		min./max. full scale value (v ~ 0.3/10 m/s)	Full scale value current output (v ~ 2.5 m/s)	Pulse value (~ 2 pulse/s)	Low flow cut off (v ~ 0.04 m/s)
[mm]	[in]	[m³/h]	[m³/h]	[m³]	[m³/h]
150	6	20 to 600	150	0.03	2.5

Flow characteristic values in US units: 1/12 - 6" (DN 2 - 150)

Nominal diameter		Recommended flow	Factory settings		
		min./max. full scale value (v ~ 0.3/10 m/s)	Full scale value current output (v ~ 2.5 m/s)	Pulse value (~ 2 pulse/s)	Low flow cut off (v ~ 0.04 m/s)
[in]	[mm]	[gal/min]	[gal/min]	[gal]	[gal/min]
1/12	2	0.015 to 0.5	0.1	0.001	0.002
1/32	4	0.07 to 2	0.5	0.005	0.008
5/16	8	0.25 to 8	2	0.02	0.025
½	15	1 to 27	6	0.05	0.1
1 [1]	25	2.5 to 80	18	0.2	0.25
1 ½	40	7 to 190	50	0.5	0.75
2	50	10 to 300	75	0.5	1.25
3	80	24 to 800	200	2	2.5
4	100	40 to 1 250	300	2	4

Nominal diameter		Recommended flow	Factory settings		
		min./max. full scale value (v ~ 0.3/10 m/s)	Full scale value current output (v ~ 2.5 m/s)	Pulse value (~ 2 pulse/s)	Low flow cut off (v ~ 0.04 m/s)
[in]	[mm]	[gal/min]	[gal/min]	[gal]	[gal/min]
5	125	60 to 1950	450	5	7
6	150	90 to 2650	600	5	12

1) The values apply for the product version: 5HxB26

Recommended measuring range

Flow limit → 193

Operable flow range

Over 1000 : 1

Input signal

External measured values

To increase the measurement accuracy of certain measured variables or to calculate the mass flow, the automation system can continuously write different measured values to the measuring instrument:
- Medium temperature enables temperature-compensated conductivity measurement (e.g. iTEMP)
- Reference density for calculating the mass flow

Various pressure and temperature measuring devices can be ordered from Endress +Hauser: see "Accessories" section → 177

It is recommended to read in external measured values to calculate the corrected volume flow.

Current input

The measured values are written from the automation system to the measuring device via the current input → 180.

Digital communication

The measured values are written by the automation system via PROFINET over Ethernet-APL.

Current input 0/4 to 20 mA

Current input	0/4 to 20 mA (active/passive)
Current span	▪ 4 to 20 mA (active) ▪ 0/4 to 20 mA (passive)
Resolution	1 µA
Voltage drop	Typically: 0.6 to 2 V for 3.6 to 22 mA (passive)
Maximum input voltage	≤ 30 V (passive)
Open-circuit voltage	≤ 28.8 V (active)
Possible input variables	▪ Temperature ▪ Density

Status input

Maximum input values	▪ DC −3 to 30 V ▪ If status input is active (ON): R_i >3 kΩ
Response time	Configurable: 5 to 200 ms
Input signal level	▪ Low signal: DC −3 to +5 V ▪ High signal: DC 12 to 30 V
Assignable functions	▪ Off ▪ Reset the individual totalizers separately ▪ Reset all totalizers ▪ Flow override

16.4 Output

Output signal

PROFINET over Ethernet-APL

Device use	**Device connection to an APL field switch** The device may only be operated according to the following APL port classifications: ▪ If used in hazardous areas: SLAA or SLAC [1)] ▪ If used in non-hazardous areas: SLAX Connection values of APL field switch (corresponds to APL port classification SPCC or SPAA, for instance): ▪ Maximum input voltage: 15 V_{DC} ▪ Minimum output values: 0.54 W **Device connection to an SPE switch** ▪ In non-hazardous areas, the device can be used with an appropriate SPE switch: The device can be connected to an SPE switch with a maximum voltage of 30 V_{DC} and a minimum output power of 1.85 W connected. ▪ The SPE switch must support the 10BASE-T1L standard and PoDL power classes 10, 11 or 12 and have a function to disable power class detection.
PROFINET	According to IEC 61158 and IEC 61784
Ethernet-APL	According to IEEE 802.3cg, APL port profile specification v1.0, galvanically isolated
Data transfer	10 Mbit/s
Current consumption	**Transmitter** ▪ Max. 400 mA(24 V) ▪ Max. 200 mA (110 V, 50/60 Hz; 230 V, 50/60 Hz)
Permitted supply voltage	9 to 30 V
Network connection	With integrated reverse polarity protection

1) For more information on using the device in the hazardous area, see the Ex-specific Safety Instructions

Current output 4 to 20 mA

Signal mode	Can be set to: ▪ Active ▪ Passive
Current range	Can be set to: ▪ 4 to 20 mA NAMUR ▪ 4 to 20 mA US ▪ 4 to 20 mA ▪ 0 to 20 mA (only if the signal mode is active) ▪ Fixed current
Maximum output values	22.5 mA
Open-circuit voltage	DC 28.8 V (active)
Maximum input voltage	DC 30 V (passive)
Load	0 to 700 Ω
Resolution	0.38 µA

Damping	Configurable: 0 to 999.9 s
Assignable measured variables	▪ Volume flow ▪ Mass flow ▪ Corrected volume flow ▪ Flow velocity ▪ Conductivity ▪ Corrected conductivity ▪ Temperature ▪ Electronics temperature

Pulse/frequency/switch output

Function	Can be configured as pulse, frequency or switch output
Version	Open collector Can be set to: ▪ Active ▪ Passive ▪ Passive NAMUR Ex-i, passive
Maximum input values	DC 30 V, 250 mA (passive)
Open-circuit voltage	DC 28.8 V (active)
Voltage drop	For 22.5 mA: ≤ DC 2 V
Pulse output	
Maximum input values	DC 30 V, 250 mA (passive)
Maximum output current	22.5 mA (active)
Open-circuit voltage	DC 28.8 V (active)
Pulse width	Configurable: 0.05 to 2 000 ms
Maximum pulse rate	10 000 Impulse/s
Pulse value	Configurable
Assignable measured variables	▪ Volume flow ▪ Mass flow ▪ Corrected volume flow
Frequency output	
Maximum input values	DC 30 V, 250 mA (passive)
Maximum output current	22.5 mA (active)
Open-circuit voltage	DC 28.8 V (active)
Output frequency	Configurable: end value frequency 2 to 10 000 Hz(f_{max} = 12 500 Hz)
Damping	Configurable: 0 to 999.9 s
Pulse/pause ratio	1:1
Assignable measured variables	▪ Volume flow ▪ Mass flow ▪ Corrected volume flow ▪ Flow velocity ▪ Conductivity ▪ Corrected conductivity ▪ Temperature ▪ Electronics temperature
Switch output	
Maximum input values	DC 30 V, 250 mA (passive)
Open-circuit voltage	DC 28.8 V (active)
Switching behavior	Binary, conductive or non-conductive

Switching delay	Configurable: 0 to 100 s
Number of switching cycles	Unlimited

Assignable functions	▪ OFF
	▪ ON
	▪ Diagnostic behavior
	▪ Limit value:
	  ▪ OFF
	  ▪ Volume flow
	  ▪ Mass flow
	  ▪ Corrected volume flow
	  ▪ Flow velocity
	  ▪ Conductivity
	  ▪ Corrected conductivity
	  ▪ Totalizer 1-3
	  ▪ Temperature
	  ▪ Electronics temperature
	▪ Flow direction monitoring
	▪ Status
	  ▪ Empty pipe detection
	  ▪ Buildup index
	  ▪ HBSI limit value exceeded
	  ▪ Low flow cut off

Relay output

Function	Switching output
Version	Relay output, galvanically isolated
Switching behavior	Can be set to: ▪ NO (normally open), factory setting ▪ NC (normally closed)
Maximum switching capacity (passive)	▪ DC 30 V, 0.1 A ▪ AC 30 V, 0.5 A

Assignable functions	▪ OFF
	▪ ON
	▪ Diagnostic behavior
	▪ Limit value:
	  ▪ OFF
	  ▪ Volume flow
	  ▪ Mass flow
	  ▪ Corrected volume flow
	  ▪ Flow velocity
	  ▪ Conductivity
	  ▪ Corrected conductivity
	  ▪ Totalizer 1-3
	  ▪ Temperature
	  ▪ Electronics temperature
	▪ Flow direction monitoring
	▪ Status
	  ▪ Empty pipe detection
	  ▪ Buildup index
	  ▪ HBSI limit value exceeded
	  ▪ Low flow cut off

User-configurable input/output

One specific input or output is assigned to a user-configurable input/output (configurable I/O) during device commissioning.

The following inputs and outputs are available for assignment:
- Choice of current output: 4 to 20 mA (active), 0/4 to 20 mA (passive)
- Pulse/frequency/switch output
- Choice of current input: 4 to 20 mA (active), 0/4 to 20 mA (passive)
- Status input

Signal on alarm

Depending on the interface, failure information is displayed as follows:

PROFINET over Ethernet-APL

Device diagnostics	Diagnostics according to PROFINET PA Profile 4.02

Current output

Current output 4-20 mA	
Failure mode	Configurable: ▪ 4 to 20 mA in accordance with NAMUR recommendation NE 43 ▪ 4 to 20 mA in accordance with US ▪ Min. value: 3.59 mA ▪ Max. value: 22.5 mA ▪ Definable value between: 3.59 to 22.5 mA ▪ Actual value ▪ Last valid value
Current output 4-20 mA	
Failure mode	Configurable: ▪ Maximum alarm: 22 mA ▪ Definable value between: 0 to 20.5 mA

Pulse/frequency/switch output

Pulse output	
Failure mode	Configurable: ▪ Actual value ▪ No pulses
Frequency output	
Failure mode	Configurable: ▪ Actual value ▪ 0 Hz ▪ Definable value between: 2 to 12 500 Hz
Switch output	
Failure mode	Configurable: ▪ Current status ▪ Open ▪ Closed

Relay output

Failure mode	Choose from: ▪ Current status ▪ Open ▪ Closed

Local display

Plain text display	With information on cause and remedial measures
Backlight	Red lighting indicates a device error.

Status signal as per NAMUR recommendation NE 107

Interface/protocol

- Via digital communication:
  PROFINET over Ethernet-APL
- Via service interface
  - Service interface CDI-RJ45
  - WLAN interface
- Plain text display
  With information on cause and remedial actions

Web browser

Plain text display	With information on cause and remedial measures

LEDs

Status information	Status indicated by various LEDs The following information is displayed depending on the device version: ▪ Supply voltage active ▪ Data transmission active ▪ Device alarm/error has occurred ▪ Network available ▪ Connection established ▪ PROFINET blinking feature Diagnostic information via LEDs → 138

Low flow cut off

The switch points for low flow cut off are user-selectable.

Galvanic isolation

The outputs are galvanically isolated:
- from the power supply
- from one another
- from the protective ground connection (PE)

Protocol-specific data

Protocol	Application layer protocol for decentral device periphery and distributed automation, Version 2.43
Communication type	Ethernet Advanced Physical Layer 10BASE-T1L
Conformance Class	Conformance Class B (PA)
Netload Class	PROFINET Netload Robustness Class 2 10 Mbit/s
Data transfer	10 Mbit/s Full-duplex
Cycle times	64 ms
Polarity	Automatic correction of crossed "APL signal +" and "APL signal -" signal lines
Media Redundancy Protocol (MRP)	Not possible (point-to-point connection to APL field switch)

System redundancy support	System redundancy S2 (2 AR with 1 NAP)
Device profile	PROFINET PA profile 4.02 (Application interface identifier API: 0x9700)
Manufacturer ID	17
Device type ID	0xA43C
Device description files (GSD, DTM, FDI)	Information and files available at: ▪ www.endress.com → Downloads area ▪ www.profibus.com
Supported connections	▪ 2x AR (IO Controller AR) ▪ 2x AR (IO Supervisor Device AR connection allowed)
Configuration options for measuring instrument	▪ DIP switches on the electronics module, for device name assignment (last part) ▪ Asset management software (FieldCare, DeviceCare, Field Xpert) ▪ Integrated Web server via Web browser and IP address ▪ Device master file (GSD), can be read out via the integrated Web server of the measuring instrument. ▪ Onsite operation
Configuration of the device name	▪ DIP switches on the electronics module, for device name assignment (last part) ▪ DCP protocol ▪ Asset management software (FieldCare, DeviceCare, Field Xpert) ▪ Integrated web server

Supported functions	▪ Identification & Maintenance, simple device identifier via:
	  ▪ Control system
	  ▪ Nameplate
	▪ Measured value status
	  The process variables are communicated with a measured value status
	▪ Blinking feature via the local display for simple device identification and assignment
	▪ Device operation via asset management software (e.g. FieldCare, DeviceCare, SIMATIC PDM with FDI package)

System integration	Information regarding system integration . ▪ Cyclic data transmission ▪ Overview and description of the modules ▪ Status coding ▪ Factory setting

16.5 Power supply

Terminal assignment

→ 31

Available device plugs

→ 31

Available device plugs

→ 31

Supply voltage

Order code "Power supply"	Terminal voltage		Frequency range
Option **D**	DC 24 V	±20%	–
Option **E**	AC 100 to 240 V	−15...+10%	50/60 Hz, ±4 Hz
Option **I**	DC 24 V	±20%	–
	AC 100 to 240 V	−15...+10%	50/60 Hz, ±4 Hz

Power consumption

Transmitter

Max. 10 W (active power)

switch-on current	Max. 36 A (<5 ms) as per NAMUR Recommendation NE 21

Current consumption

Transmitter

- Max. 400 mA (24 V)
- Max. 200 mA (110 V, 50/60 Hz; 230 V, 50/60 Hz)

Power supply failure

- Totalizers stop at the last value measured.
- Depending on the device version, the configuration is retained in the device memory or in the plug-in memory (HistoROM DAT).
- Error messages (incl. total operated hours) are stored.

Overcurrent protection element

The device must be operated with a dedicated circuit breaker, as it does not have an ON/OFF switch of its own.
- The circuit breaker must be easy to reach and labeled accordingly.
- Permitted nominal current of the circuit breaker: 2 A up to maximum 10 A.

Electrical connection

→ 📄 32

Potential equalization

Terminals

Spring-loaded terminals: Suitable for strands and strands with ferrules.
Conductor cross-section 0.2 to 2.5 mm^2 (24 to 12 AWG).

Cable entries

- Cable gland: M20 × 1.5 with cable Ø 6 to 12 mm (0.24 to 0.47 in)
- Thread for cable entry:
  - NPT ½"
  - G ½"
  - M20

Cable specification

→ 📄 29

Overvoltage protection

Mains voltage fluctuations	→ 📄 187
Overvoltage category	Overvoltage category II
Short-term, temporary overvoltage	Between cable and ground up to 1200 V, for max. 5 s
Long-term, temporary overvoltage	Between cable and ground up to 500 V

16.6 Performance characteristics

Reference operating conditions

- Error limits following DIN EN 29104, in future ISO 20456
- Water, typically: +15 to +45 °C (+59 to +113 °F); 0.5 to 7 bar (73 to 101 psi)
- Data as indicated in the calibration protocol
- Accuracy based on accredited calibration rigs according to ISO 17025
- Reference temperature for conductivity measurement: 25 °C (77 °F)

Maximum measurement error

o.r. = of reading

Maximum permissible error under reference operating conditions

Volume flow

- ±0.5 % o.r. ± 1 mm/s (0.04 in/s)
- Optional: ±0.2 % o.r. ± 2 mm/s (0.08 in/s)

Fluctuations in the supply voltage have no effect within the specified range.

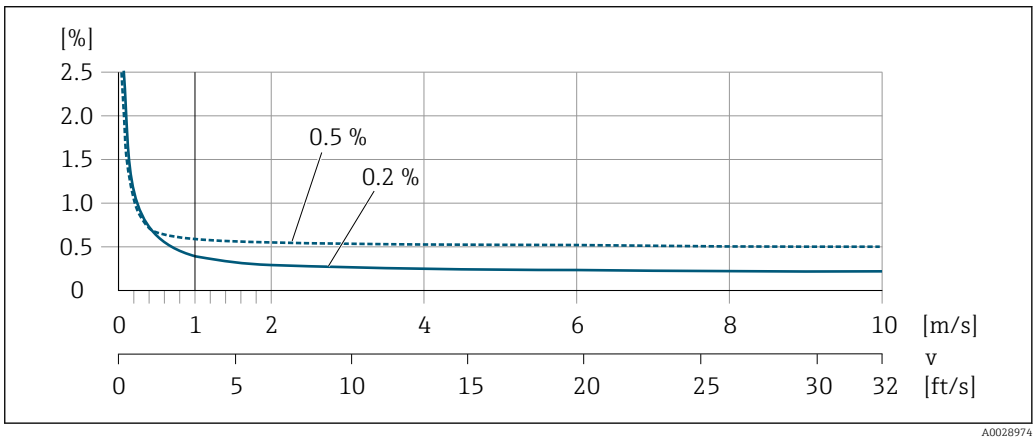

29 *Maximum measurement error in % o.r.*

Temperature

±3 °C (±5.4 °F)

Electrical conductivity

The values apply for:
- Devices with stainless steel process connections
- Measurements at a reference temperature of 25 °C (77 °F). At different temperatures, attention must be paid to the temperature coefficient of the medium (typically 2.1 %/K)

Conductivity [µS/cm]	Nominal diameter [mm]	Nominal diameter [in]	Measurement error [%] of reading
5 to 20	15 to 150	½ to 6	± 20%
> 20 to 50	15 to 150	½ to 6	± 10%
> 50 to 10 000	2 to 8	1/12 to 5/16	± 10%
	15 to 150	½ to 6	▪ Standard: ± 10% ▪ Optional [1]: ± 5%
> 10 000 to 20 000	2 to 150	1/12 to 6	± 10%
> 20 000 to 100 000	2 to 150	1/12 to 6	± 20%

1) Order code for "Calibrated conductivity measurement", option CW

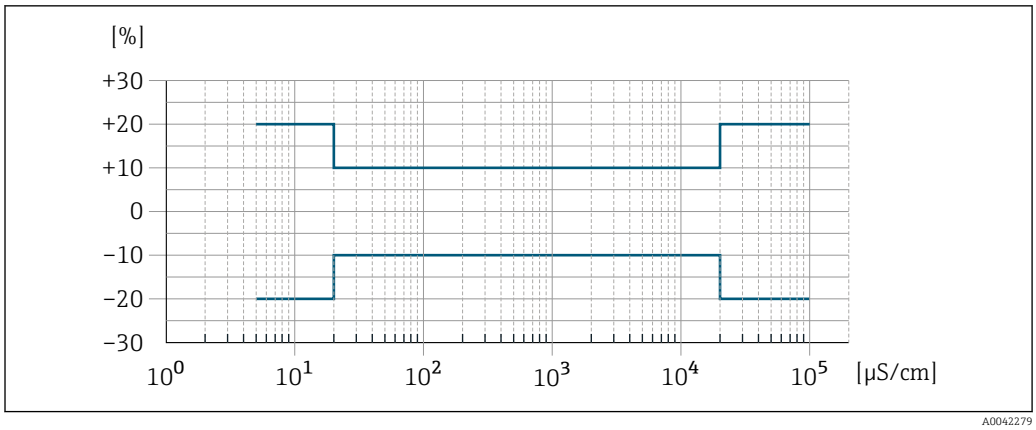

30 *Measurement error (standard)*

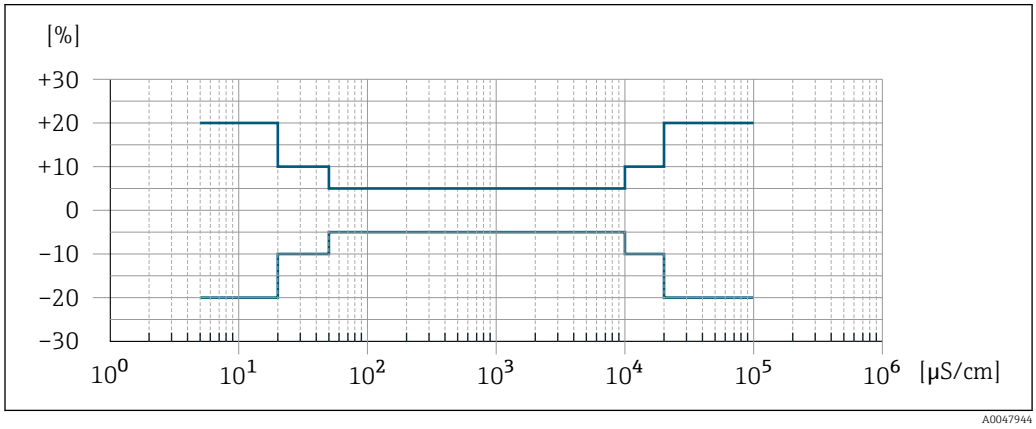

31 *Measurement error (optional: order code for "Calibrated conductivity measurement", option CW)*

Repeatability	o.r. = of reading **Volume flow** Max. ±0.1 % o.r. ± 0.5 mm/s (0.02 in/s) **Temperature** ±0.5 °C (±0.9 °F) **Electrical conductivity** ▪ Max. ±5 % o.r. ▪ Max. ±1 % o.r. for DN 15 to 150 in conjunction with process connections made of stainless steel 1.4404 (F316L)
Temperature measurement response time	T_{90} < 15 s
Influence of ambient temperature	**Current output**

Temperature coefficient	Max. 1 µA/°C

Pulse/frequency output

Temperature coefficient	No additional effect. Included in accuracy.

16.7 Installation

Installation requirements	→ 19

16.8 Environment

Ambient temperature range	→ 25 **Temperature tables** Observe the interdependencies between the permitted ambient and fluid temperatures when operating the device in hazardous areas. For detailed information on the temperature tables, see the separate document entitled "Safety Instructions" (XA) for the device.
Storage temperature	The storage temperature corresponds to the operating temperature range of the transmitter and the sensor → 25. ▪ Protect the measuring device against direct sunlight during storage in order to avoid unacceptably high surface temperatures. ▪ Select a storage location where moisture cannot collect in the measuring device as fungus or bacteria infestation can damage the liner. ▪ If protection caps or protective covers are mounted these should never be removed before installing the measuring device.
Atmosphere	Additional protection against condensation and moisture: the sensor housing is potted with a gel. Order code for "Sensor option", option CF "Harsh environment".
Relative humidity	The device is suitable for use in outdoor and indoor areas with a relative humidity of 4 to 95%.
Operating height	According to EN 61010-1 ≤ 2 000 m (6 562 ft)
Degree of protection	**Transmitter** ▪ IP66/67, Type 4X enclosure, suitable for pollution degree 4 ▪ When the housing is open: IP20, Type 1 enclosure, suitable for pollution degree 2 ▪ Display module: IP20, Type 1 enclosure, suitable for pollution degree 2 **Optional** **External WLAN antenna** IP67
Vibration resistance and shock resistance	**Sinusoidal vibration similar to IEC 60068-2-6** ▪ 2 to 8.4 Hz, 3.5 mm peak ▪ 8.4 to 2 000 Hz, 1 g peak

Broadband random vibration similar to IEC 60068-2-64

- 10 to 200 Hz, 0.003 g^2/Hz
- 200 to 2 000 Hz, 0.001 g^2/Hz
- Total: 1.54 g rms

Half-sine shocks similar to IEC 60068-2-27

6 ms 30 g

Rough handling shocks similar to IEC 60068-2-31

Mechanical load

Transmitter housing:
- Protect against mechanical effects, such as shock or impact
- Do not use as a ladder or climbing aid

Electromagnetic compatibility (EMC)

Details are provided in the Declaration of Conformity.

This unit is not intended for use in residential environments and cannot guarantee adequate protection of the radio reception in such environments.

The selection of a sensor with a steel housing is recommended for use in the vicinity of electrical power supply lines with strong currents.

16.9 Process

Medium temperature range

−20 to +150 °C (−4 to +302 °F)

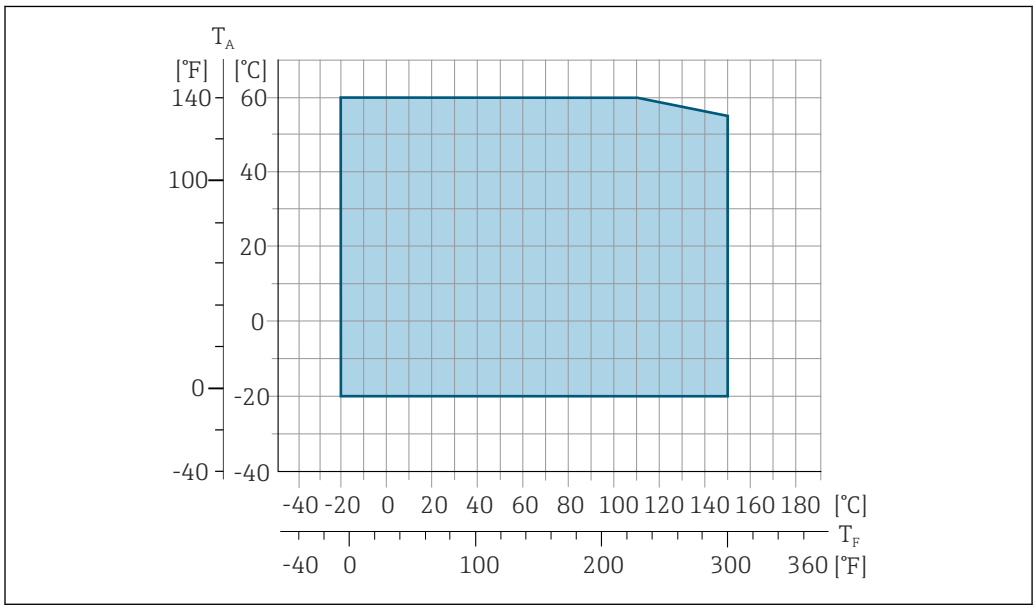

T_A *Ambient temperature range*
T_F *Fluid temperature*

The permitted fluid temperature in custody transfer is 0 to +50 °C (+32 to +122 °F).

Conductivity

≥5 µS/cm for liquids in general.

Pressure/temperature ratings

For an overview of the pressure/temperature ratings for the process connections, see the Technical Information

Pressure tightness

Liner: PFA

Nominal diameter		Limit values for absolute pressure in [mbar] ([psi]) for medium temperatures:				
[mm]	[in]	+25 °C (+77 °F)	+80 °C (+176 °F)	+100 °C (+212 °F)	+130 °C (+266 °F)	+150 °C (+302 °F)
2 to 150	1/12 to 6	0 (0)	0 (0)	0 (0)	0 (0)	0 (0)

Flow limit

The diameter of the pipe and the flow rate determine the nominal diameter of the sensor. The optimum velocity of flow is between 2 to 3 m/s (6.56 to 9.84 ft/s). Also match the velocity of flow (v) to the physical properties of the medium:
- v < 2 m/s (6.56 ft/s): for low conductivity values
- v > 2 m/s (6.56 ft/s): for media producing buildup (e.g. milk with a high fat content)

- A necessary increase in the flow velocity can be achieved by reducing the sensor nominal diameter.
- In the case of media with a high solids content, a sensor with a nominal diameter > DN 8 (3/8") can improve the signal stability and cleanability due to the larger electrodes.

Pressure loss

- No pressure loss occurs as of nominal diameter DN 8 (5/16") if the sensor is installed in a pipe with the same nominal diameter.
- Pressure losses for configurations incorporating adapters according to DIN EN 545 → 25

System pressure

→ 25

Internal cleaning

- CIP cleaning
- SIP cleaning

Vibrations

→ 25

16.10 Mechanical construction

Design, dimensions

For the dimensions and installed lengths of the device, see the "Technical Information" document, "Mechanical construction" section

Weight

All values (weight exclusive of packaging material) refer to devices with flanges of the standard pressure rating.
The weight may be lower than indicated depending on the pressure rating and design.
Weight specifications including transmitter as per order code for "Housing", option A "Aluminum, coated".

Different values due to different transmitter versions:
- Transmitter version for the hazardous area
  (Order code for "Housing", option A "Aluminum, coated"; Ex d): +2 kg (+4.4 lbs)
- Transmitter version for hygienic area
  (Order code for "Housing", option B "Stainless, hygienic"): +0.2 kg (+0.44 lbs)

Nominal diameter		Weight	
[mm]	[in]	[kg]	[lbs]
2	1/12	4.7	10.4
4	5/32	4.7	10.4
8	5/16	4.7	10.4
15	½	4.6	10.1
25	1	5.5	12.1
40	1 ½	6.8	15.0
50	2	7.3	16.1
65	–	8.1	17.9
80	3	8.7	19.2
100	4	10.0	22.1
125	5	15.4	34.0
150	6	17.8	39.3

Measuring tube specification

Nominal diameter		Pressure rating [1] EN (DIN)	Process connection internal diameter PFA	
[mm]	[in]	[bar]	[mm]	[in]
2	1/12	PN 16/40	2.25	0.09
4	5/32	PN 16/40	4.5	0.18
8	5/16	PN 16/40	9.0	0.35
15	½	PN 16/40	16.0	0.63
–	1	PN 16/40	22.6 [2]	0.89 [2]
25	–	PN 16/40	26.0 [3]	1.02 [3]
40	1 ½	PN 16/25/40	34.8	1.37
50	2	PN 16/25	47.5	1.87
65	–	PN 16/25	60.2	2.37
80	3	PN 16/25	72.9	2.87
100	4	PN 16/25	97.4	3.83
125	5	PN 10/16	120.0	4.72
150	6	PN 10/16	146.9	5.78

1) Depending on process connection and seals used
2) Order code 5H**22
3) Order code 5H**26

Materials

Transmitter housing

Order code for "Housing":
- Option **A** "Aluminum, coated": aluminum, AlSi10Mg, coated
- Option **B** "Stainless, hygienic": stainless steel, 1.4404 (316L)

Window material

Order code for "Housing":
- Option **A** "Aluminum, coated": glass
- Option **B** "Stainless, hygienic": polycarbonate

Seals

Order code for "Housing":
Option **B** "Stainless, hygienic": EPDM and silicone

Cable entries/cable glands

Order code for "Housing", option A "Aluminum, coated"

The various cable entries are suitable for hazardous and non-hazardous areas.

Cable entry/cable gland	Material
Gland M20 × 1.5	Non-Ex: plastic
	Z2, D2, Ex d/de: brass with plastic
Adapter for cable entry with internal thread G ½"	Nickel-plated brass
Adapter for cable entry with internal thread NPT ½"	

Order code for "Housing", option B "Stainless, hygienic"

The various cable entries are suitable for hazardous and non-hazardous areas.

Cable entry/cable gland	Material
Cable gland M20 × 1.5	Plastic
Adapter for cable entry with internal thread G ½"	Nickel-plated brass
Adapter for cable entry with internal thread NPT ½"	

Sensor housing

Stainless steel 1.4301 (304)

Measuring tubes

Stainless steel 1.4301 (304)

Liner

PFA

Process connections

- Stainless steel, 1.4404 (F316L)
- PVDF
- PVC adhesive sleeve

Electrodes

- Standard: stainless steel, 1.4435 (316 L)
- Optional: Alloy C22, 2.4602 (UNS N06022); tantalum (Ta 2.5 W); platinum (Pl/Ir 20%) (only up to DN 25 (1"))

Seals

- O-ring seal, DN 2 to 25 (1/12 to 1"): EPDM, FKM, Kalrez
- Aseptic [2] gasket seal, DN 2 to 150 (1/12 to 6"): EPDM, FKM, VMQ (silicone)

2) In this context, aseptic means hygienic design

Accessories

Protective cover

Stainless steel, 1.4404 (316L)

External WLAN antenna

- Antenna: ASA plastic (acrylonitrile styrene acrylate) and nickel-plated brass
- Adapter: Stainless steel and nickel-plated brass
- Cable: Polyethylene
- Plug: Nickel-plated brass
- Angle bracket: Stainless steel

Grounding rings

- Standard: 1.4435 (316L)
- Optional: Alloy C22, tantalum

Wall mounting kit

Stainless steel, 1.4301 (304) [3)]

Spacer

1.4435 (F316L)

Fitted electrodes	▪ Working electrodes for signal detection ▪ Medium monitoring electrode for empty pipe detection/temperature measurement (DN 15 to 150 (½ to 6") only)
Process connections	With O-ring seal: ▪ Welding nipple ▪ Flange ▪ Male thread ▪ Female thread ▪ Hose connection ▪ PVC adhesive sleeve With aseptic gasket seal: ▪ Clamp ▪ Coupling ▪ Flange ▪ For information on the different materials used in the process connections → 195 ▪ For information on the mechanical construction of the process connections
Surface roughness	Electrodes: ▪ Stainless steel, 1.4435 (316 L) electropolished ≤ 0.5 µm (19.7 µin) ▪ Alloy C22, 2.4602 (UNS N06022); Tantal (Ta 2,5W) ≤ 0.5 µm (19.7 µin); Platin (Pl/Ir 20%) ≤ 0.5 µm (19.7 µin) (All data refer to parts in contact with the medium). Liner with PFA: ≤ 0.4 µm (15.7 µin) (All data refer to parts in contact with the medium).

3) Does not meet the hygienic design installation guidelines.

Stainless steel process connections:
- With O-ring seal: ≤ 1.6 µm (63 µin)
- With aseptic seal: Ra_{max} = 0.76 µm (31.5 µin)
  Optional: Ra_{max} = 0.38 µm (15 µin) electropolished

(All data refer to parts in contact with the medium).

16.11 Display and user interface

Languages

Can be operated in the following languages:
- Via local operation
  English, German, French, Spanish, Italian, Dutch, Portuguese, Polish, Russian, Turkish, Chinese, Japanese, Korean, Vietnamese, Czech, Swedish
- Via web browser
  English, German, French, Spanish, Italian, Dutch, Portuguese, Polish, Russian, Turkish, Chinese, Japanese, Vietnamese, Czech, Swedish
- Via "FieldCare", "DeviceCare" operating tool: English, German, French, Spanish, Italian, Chinese, Japanese

Local operation

Via display module

Equipment level:
- Order code for "Display; operation", option F "4-line, illuminated, graphic display; touch control"
- Order code for "Display; operation", option G "4-line, illuminated, graphic display; touch control + WLAN"

Information about WLAN interface → 67

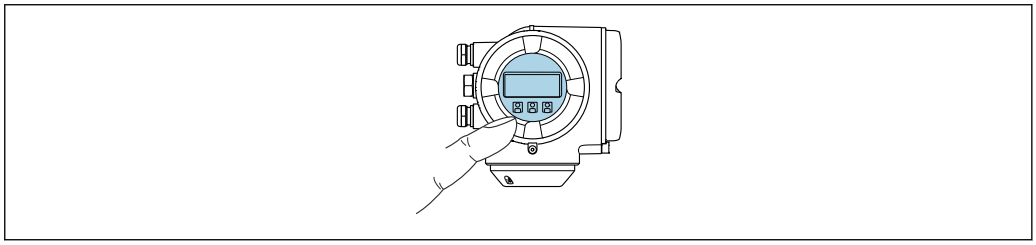

A0026785

32 Operation with touch control

Display elements

- 4-line, illuminated, graphic display
- White background lighting; switches to red in event of device errors
- Format for displaying measured variables and status variables can be individually configured

Operating elements

- External operation via touch control (3 optical keys) without opening the housing: ⊞, ⊟, E
- Operating elements also accessible in the various zones of the hazardous area

Via remote display and operating module DKX001

The remote display and operating module DKX001 is available as an optional extra → 175..

- The remote display and operating module DKX001 is only available for the following housing version: order code for "Housing": option A "Aluminum, coated"
- The measuring instrument is always supplied with a dummy cover when the remote display and operating module DKX001 is ordered directly with the measuring instrument. Display or operation at the transmitter is not possible in this case.
- If ordered subsequently, the remote display and operating module DKX001 may not be connected at the same time as the existing measuring instrument display module. Only one display or operation unit may be connected to the transmitter at any one time.

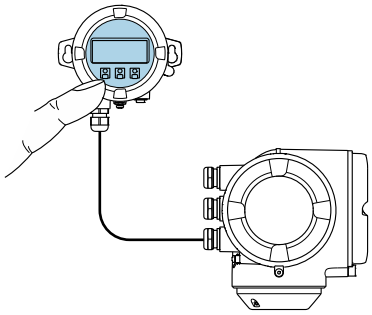

A0026786

33 Operation via remote display and operating module DKX001

Display and operating elements

The display and operating elements correspond to those of the display module → 197.

Housing material

The housing material of the display and operating module DKX001 corresponds to the selected material of the transmitter housing.

Transmitter housing		Remote display and operating module
Order code for "Housing"	**Material**	**Material**
Option **A** "Aluminum, coated"	AlSi10Mg, coated	AlSi10Mg, coated

Cable entry

Corresponds to the choice of transmitter housing, order code for "Electrical connection".

Connecting cable

→ 30

Dimensions

Information on the dimensions:
"Mechanical construction" section of the "Technical Information" document.

Remote operation	→ 66
Service interface	→ 66

Supported operating tools

Different operating tools can be used for local or remote access to the measuring device. Depending on the operating tool used, access is possible with different operating units and via a variety of interfaces.

Supported operating tools	Operating unit	Interface	Additional information
Web browser	Notebook, PC or tablet with web browser	▪ Service interface CDI-RJ45 ▪ WLAN interface	Special Documentation for device
DeviceCare SFE100	Notebook, PC or tablet with Microsoft Windows system	▪ Service interface CDI-RJ45 ▪ WLAN interface ▪ Fieldbus protocol	→ 🗎 177
FieldCare SFE500	Notebook, PC or tablet with Microsoft Windows system	▪ Service interface CDI-RJ45 ▪ WLAN interface ▪ Fieldbus protocol	→ 🗎 177
Field Xpert	SMT70/77/50	▪ All fieldbus protocols ▪ WLAN interface ▪ Bluetooth ▪ Service interface CDI-RJ45	Operating Instructions BA01202S Device description files: Use update function of handheld terminal

Other operating tools based on FDT technology with a device driver such as DTM/iDTM or DD/EDD can be used for device operation. These operating tools are available from the individual manufacturers. Integration into the following operating tools, among others, is supported:

- Emersons TREX → www.emerson.com
- Field Device Manager (FDM) from Honeywell → www.process.honeywell.com
- FieldMate from Yokogawa → www.yokogawa.com
- PACTWare → www.pactware.com

The related device description files are available: www.endress.com → Download Area

Web server

The integrated web server can be used to operate and configure the device via a web browser via Ethernet-APL, service interface (CDI-RJ45) or via WLAN interface . The structure of the operating menu is the same as for the local display. In addition to the measured values, status information on the device is displayed and can be used to monitor device health. Furthermore the device data can be managed and the network parameters can be configured.

A device that has a WLAN interface (can be ordered as an option) is required for the WLAN connection: order code for "Display; Operation", option G "4-line, illuminated; touch control + WLAN". The device acts as an Access Point and enables communication by computer or a mobile handheld terminal.

Supported functions
Data exchange between the operating unit (such as a notebook, for example,) and measuring instrument:
- Upload the configuration from the measuring instrument (XML format, configuration backup)
- Save the configuration to the measuring instrument (XML format, restore configuration)
- Export event list (.csv file)
- Export parameter settings (.csv file or PDF file, document the measuring point configuration)
- Export the Heartbeat Technology verification report (PDF file, only available with the **Heartbeat Verification** → 🗎 204 application package)

- Flash firmware version for device firmware upgrade, for example
- Download driver for system integration
- Visualize up to 1000 saved measured values (only available with the **Extended HistoROM** application package→ 📄 204)

HistoROM data management

The measuring instrument features HistoROM data management. HistoROM data management comprises both the storage and import/export of key device and process data, making operation and servicing far more reliable, secure and efficient.

When the device is delivered, the factory settings of the configuration data are stored as a backup in the device memory. This memory can be overwritten with an updated data record, for example after commissioning.

Additional information on the data storage concept

There are different types of data storage units in which device data are stored and used by the device:

	HistoROM backup	T-DAT	S-DAT
Available data	▪ Event logbook, e.g. diagnostic events ▪ Parameter data record backup ▪ Device firmware package ▪ Driver for system integration for exporting via web server, e.g.: GSD for PROFINET	▪ Measured value logging ("Extended HistoROM" order option) ▪ Current parameter data record (used by firmware at run time) ▪ Indicator (minimum/maximum values) ▪ Totalizer value	▪ Sensor data: e.g. nominal diameter ▪ Serial number ▪ Calibration data ▪ Device configuration (e.g. SW options, fixed I/O or multi I/O)
Storage location	Fixed on the user interface PC board in the connection compartment	Can be plugged into the user interface PC board in the connection compartment	In the sensor plug in the transmitter neck part

Data backup

Automatic

- The most important device data (sensor and transmitter) are automatically saved in the DAT modules
- If the transmitter or measuring device is replaced: once the T-DAT containing the previous device data has been exchanged, the new measuring device is ready for operation again immediately without any errors
- If exchanging the electronics module (e.g. I/O electronics module): Once the electronics module has been replaced, the software of the module is compared against the current device firmware. The module software is upgraded or downgraded where necessary. The electronics module is available for use immediately afterwards and no compatibility problems occur.

Manual

Additional parameter data record (complete parameter settings) in the integrated device memory HistoROM backup for:

- Data backup function
  Backup and subsequent restoration of a device configuration in the device memory HistoROM backup
- Data comparison function
  Comparison of the current device configuration with the device configuration saved in the device memory HistoROM backup

Data transmission

Manual

- Transfer of a device configuration to another device using the export function of the specific operating tool, e.g. with FieldCare, DeviceCare or web server: to duplicate the configuration or to store in an archive (e.g. for backup purposes)
- Transmission of the drivers for system integration via web server, e.g.: GSD for PROFINET

Event list

Automatic
- Chronological display of up to 20 event messages in the events list
- If the **Extended HistoROM** application package (order option) is enabled: up to 100 event messages are displayed in the events list along with a time stamp, plain text description and remedial measures
- The events list can be exported and displayed via a variety of interfaces and operating tools e.g. DeviceCare, FieldCare or Web server

Data logging

Manual
If the **Extended HistoROM** application package (order option) is enabled:
- Recording of 1 to 4 channels of up to 1 000 measured values (up to 250 measured values per channel)
- User configurable recording interval
- Export the measured value log via a variety of interfaces and operating tools e.g. FieldCare, DeviceCare or web server

16.12 Certificates and approvals

Current certificates and approvals for the product are available at www.endress.com on the relevant product page:

1. Select the product using the filters and search field.
2. Open the product page.
3. Select **Downloads**.

CE mark	The device meets the legal requirements of the applicable EU Directives. These are listed in the corresponding EU Declaration of Conformity along with the standards applied. Endress+Hauser confirms successful testing of the device by affixing to it the CE mark.
UKCA marking	The device meets the legal requirements of the applicable UK regulations (Statutory Instruments). These are listed in the UKCA Declaration of Conformity along with the designated standards. By selecting the order option for UKCA marking, Endress+Hauser confirms a successful evaluation and testing of the device by affixing the UKCA mark. Contact address Endress+Hauser UK: Endress+Hauser Ltd. Floats Road Manchester M23 9NF United Kingdom www.uk.endress.com
Ex-approval	The devices are certified for use in hazardous areas and the relevant safety instructions are provided in the separate "Safety Instructions" (XA) document. Reference is made to this document on the nameplate.

Sanitary compatibility	▪ 3-A approval
	  ▪ Confirmation by affixing the 3-A symbol for measuring instruments with the order code for "Additional approval", option LP " 3-A".
	  ▪ When installing the measuring instrument, ensure that no liquid can accumulate on the outside of the measuring instrument.
	  Remote transmitters must be installed in accordance with the 3-A Standard.
	  ▪ Accessories and process connections (e.g. weather protection cover, wall holder unit) must be selected and installed in accordance with the 3-A Standard.
	  Each accessory can be cleaned. Disassembly may be necessary under certain circumstances.
	▪ EHEDG-certified (Type EL Class I)
	  ▪ Confirmation by affixing the EHEDG symbol for measuring instruments with the order code for "Additional approval", option LT "EHEDG".
	  ▪ EPDM is not a suitable seal material for media with a fat content > 8 %.
	  ▪ To meet the requirements for EHEDG certification, the device must be used with process connections in accordance with the EHEDG position paper entitled "Easy cleanable Pipe couplings and Process connections" (www.ehedg.org).
	  ▪ The EHEDG cleanability test requires a flow velocity of 1.5 m/s in the process line. This velocity must be ensured for EHEDG-compliant cleaning.
	▪ The requirements of the Food Contact Material Regulations must be observed when selecting the materials used.
	▪ FDA 21 CFR 177.1550
	▪ Food Contact Materials Regulation (EC) 1935/2004
	▪ Food Contact Materials Regulation GB 4806
	▪ Pasteurized Milk Ordinance (PMO)
	ℹ Binding information on the applicable conformities can be found in the relevant applicable Declaration of Conformity.

Pharmaceutical compatibility	▪ USP <87>
	▪ USP <88> Class VI 121 °C
	▪ TSE/BSE Certificate of Suitability
	▪ cGMP
	  Devices with the order code for "Test, certificate", option JG "Conformity with cGMP-derived requirements, declaration" comply with the requirements of cGMP with regard to the surfaces of parts in contact with the medium, design, material conformity, USP Class VI tests and TSE/BSE conformity.
	  A serial number-specific declaration is generated.
	ℹ Binding information on the applicable conformities can be found in the relevant applicable Declaration of Conformity.

PROFINET over Ethernet-APL certification	**PROFINET interface**
	The measuring instrument is certified and registered by the PROFIBUS Nutzerorganisation e.V. (PNO). The measuring system meets all the requirements of the following specifications:
	▪ Certified according to:
	  ▪ Test specification for PROFINET devices
	  ▪ PROFINET PA Profile 4.02
	  ▪ PROFINET Netload Robustness Class 2 10 Mbit/s
	  ▪ APL conformance test
	▪ The device can also be operated with certified devices of other manufacturers (interoperability)
	▪ The device supports PROFINET S2 system redundancy.

Radio approval	The measuring instrument has radio approval. For detailed information on the radio approval, see the Special Documentation
Pressure Equipment Directive	▪ With the marking a) PED/G1/x (x = category) or b) PESR/G1/x (x = category) on the sensor nameplate, Endress+Hauser confirms compliance with the "Essential Safety Requirements" a) specified in Annex I of the Pressure Equipment Directive 2014/68/EU or b) Schedule 2 of Statutory Instruments 2016 No. 1105. ▪ Devices not bearing this marking (without PED or PESR) are designed and manufactured according to sound engineering practice. They meet the requirements of a) Art. 4, Section 3 of the Pressure Equipment Directive 2014/68/EU or b) Part 1, Section 8 of Statutory Instruments 2016 No. 1105. The scope of application is indicated a) in diagrams 6 to 9 in Annex II of the Pressure Equipment Directive 2014/68/EU or b) in Schedule 3, Section 2 of Statutory Instruments 2016 No. 1105.
Additional certification	**Marine approval** Currently valid certificates are available: ▪ In the Downloads area of the Endress+Hauser website: www.endress.com → Downloads ▪ Specify the following details: ▪ Product root: e.g. 5H3B ▪ Search: Approval & Certificates → Marine **PWIS-free** PWIS = paint-wetting impairment substances Order code for "Service": ▪ Option **HC**: PWIS-free (version A) ▪ Option **HD**: PWIS-free (version B) ▪ Option **HE**: PWIS-free (version C) For more information on PWIS-free certification, see "Test specification" document TS01028D **Tests and certificates** ▪ EN10204-3.1 material certificate, wetted parts and sensor housing (order code for "Test, certificate", option JA) ▪ Pressure test, internal process, test report (order code for "Test, certificate", option JB)
External standards and guidelines	▪ EN 60529 Degrees of protection provided by enclosure (IP code) ▪ EN 61010-1 Safety requirements for electrical equipment for measurement, control and laboratory use - general requirements ▪ GB 30439.5 Safety requirements for industrial automation products - Part 5: Flowmeter safety requirements ▪ EN 61326-1/-2-3 EMC requirements for electrical equipment for measurement, control and laboratory use ▪ NAMUR NE 21 Electromagnetic compatibility (EMC) of industrial process and laboratory control equipment

- NAMUR NE 32
  Data retention in the event of a power failure in field and control instruments with microprocessors
- NAMUR NE 43
  Standardization of the signal level for the breakdown information of digital transmitters with analog output signal.
- NAMUR NE 53
  Software of field devices and signal-processing devices with digital electronics
- NAMUR NE 105
  Specifications for integrating fieldbus devices in engineering tools for field devices
- NAMUR NE 107
  Self-monitoring and diagnostics of field devices
- NAMUR NE 131
  Requirements for field devices for standard applications
- ETSI EN 300 328
  Guidelines for 2.4 GHz radio components.
- EN 301489
  Electromagnetic compatibility and radio spectrum matters (ERM).

16.13 Application packages

Many different application packages are available to enhance the functionality of the device. Such packages might be needed to address safety aspects or specific application requirements.

The application packages can be ordered with the device or subsequently from Endress+Hauser. Detailed information on the order code in question is available from your local Endress+Hauser sales center or on the product page of the Endress+Hauser website: www.endress.com.

Diagnostic functionality	Order code for "Application package", option EA "Extended HistoROM" Comprises extended functions concerning the event log and the activation of the measured value memory. Event log: Memory volume is extended from 20 message entries (standard version) to up to 100 entries. Data logging (line recorder): ▪ Memory capacity for up to 1000 measured values is activated. ▪ 250 measured values can be output via each of the 4 memory channels. The recording interval can be defined and configured by the user. ▪ Measured value logs can be accessed via the local display or operating tool e.g. FieldCare, DeviceCare or Web server. For detailed information, see the Operating Instructions for the device.
Heartbeat Technology	Order code for "Application package", option EB "Heartbeat Verification + Monitoring" **Heartbeat Verification** Meets the requirement for traceable verification in accordance with DIN ISO 9001:2015 Clause 7.6 a) "Control of monitoring and measuring equipment". ▪ Functional testing in the installed state without interrupting the process. ▪ Traceable verification results on request, including a report. ▪ Simple testing process via local operation or other operating interfaces. ▪ Clear measuring point assessment (pass/fail) with high total test coverage within the framework of manufacturer specifications. ▪ Extension of calibration intervals according to operator's risk evaluation.

Heartbeat Monitoring
Continuously supplies data, which are characteristic of the measuring principle, to an external condition monitoring system for the purpose of preventive maintenance or process analysis. These data enable the operator to:
- Draw conclusions - using these data and other information - about the impact the process influences
  (e.g. buildup, magnetic field interferences) have on measuring performance over time.
- Schedule servicing in time.
- Monitor the process or product quality.

Detailed information on Heartbeat Technology:
Special Documentation

Cleaning

Order code for "Application package", option EC "ECC electrode cleaning "

The electrode cleaning circuit (ECC) function has been developed to have a solution for applications where magnetite (Fe_3O_4) deposits frequently occur (e.g. hot water). Since magnetite is highly conductive this build up leads to measuring errors and ultimately to the loss of signal. The application package is designed to avoid build-up of very conductive matter and thin layers (typical of magnetite).

For detailed information, see the Operating Instructions for the device.

16.14 Accessories

Overview of accessories available to order → 175

16.15 Documentation

For an overview of the scope of the associated Technical Documentation, refer to the following:
- *Device Viewer* (www.endress.com/deviceviewer): Enter the serial number from the nameplate
- *Endress+Hauser Operations app*: Enter serial number from nameplate or scan matrix code on nameplate.

Standard documentation

Brief Operating Instructions

Brief Operating Instructions for the sensor

Measuring device	Documentation code
Proline Promag H	KA01289D

Brief operating instructions for transmitter

Measuring instrument	Documentation code
Proline 300	KA01516D

Technical Information

Measuring device	Documentation code
Promag H 300	TI01223D

Description of Device Parameters

Measuring instrument	Documentation code
Promag 300	GP01172D

Device-dependent additional documentation

Safety instructions

Safety instructions for electrical equipment for hazardous areas.

Contents	Documentation code
ATEX/IECEx Ex d	XA01414D
ATEX/IECEx Ex ec	XA01514D
cCSAus XP	XA01515D
cCSAus Ex d	XA01516D
cCSAus Ex ec	XA01517D
EAC Ex d	XA01656D
EAC Ex ec	XA01657D
JPN Ex d	XA01775D
KCs Ex d	XA03279D
INMETRO Ex d	XA01518D
INMETRO Ex ec	XA01519D
NEPSI Ex d	XA01520D
NEPSI Ex ec	XA01521D
UKEX Ex d	XA02558D
UKEX Ex ec	XA02559D

Remote display and operating module DKX001

Contents	Documentation code
ATEX/IECEx Ex i	XA01494D
ATEX/IECEx Ex ec	XA01498D
cCSAus IS	XA01499D
cCSAus Ex nA	XA01513D
EAC Ex i	XA01664D
EAC Ex ec	XA01665D
INMETRO Ex i	XA01500D
INMETRO Ex ec	XA01501D
JPN	XA01781D
KCs Ex i	XA03280D
NEPSI Ex i	XA01502D
NEPSI Ex nA	XA01503D
UKCA Ex i	XA01494D
UKCA Ex ec	XA01498D

Special documentation

Contents	Documentation code
Information on the Pressure Equipment Directive	SD01614D
Radio approvals for WLAN interface for A309/A310 display module	SD01793D
Web server	SD02768D
Remote display and operating module DKX001	SD01763D

Contents	Documentation code
Heartbeat Technology	SD02729D
Web server	SD02768D

Installation instructions

Contents	Comment
Installation instructions for spare part sets and accessories	▪ Access the overview of all the available spare part sets via *Device Viewer* → 🗎 173 ▪ Accessories available for order with Installation Instructions → 🗎 175

Index

A
Access authorization to parameters
- Read access . . . 57
- Write access . . . 57

Access code . . . 57
- Incorrect input . . . 57

Adapters . . . 25
Adapting the diagnostic behavior . . . 145
Additional certification . . . 203
Ambient conditions
- Ambient temperature . . . 25
- Mechanical load . . . 192
- Operating height . . . 191
- Relative humidity . . . 191

Ambient temperature
- Influence . . . 190

Ambient temperature range . . . 25, 191
Analog Output module . . . 76
Application . . . 178
Applicator . . . 178
Approvals . . . 201

B
Binary input module . . . 73
Binary output module . . . 77

C
Cable entries
- Technical data . . . 188

Cable entry
- Degree of protection . . . 42

CE mark . . . 10, 201
Certifications . . . 201
cGMP . . . 202
Check
- Connection . . . 43
- Received goods . . . 14

Checklist
- Post-connection check . . . 43
- Post-installation check . . . 28

CIP cleaning . . . 193
Commissioning . . . 81
- Advanced settings . . . 107
- Configuring the device . . . 82

Conductivity . . . 192
Connecting the device . . . 32
Connecting the signal cables . . . 32
Connecting the supply voltage cables . . . 32
Connection
- see Electrical connection

Connection cable . . . 29, 30
Connection examples, potential equalization . . . 36, 37
Connection preparations . . . 31
Connection tools . . . 29
Context menu
- Calling up . . . 53
- Closing . . . 53
- Explanation . . . 53

Current consumption . . . 188
Cyclic data transmission . . . 72

D
Declaration of Conformity . . . 10
Defining the access code . . . 122, 123
Degree of protection . . . 42, 191
Device
- Configuring . . . 82
- Preparing for electrical connection . . . 31

Device components . . . 13
Device description files . . . 70
Device locking, status . . . 126
Device master file
- GSD . . . 70

Device name
- Sensor . . . 16
- Transmitter . . . 15

Device repair . . . 173
Device revision . . . 70
Device type ID . . . 70
Device Viewer . . . 173
DeviceCare . . . 69
- Device description file . . . 70

Diagnostic behavior
- Explanation . . . 141
- Symbols . . . 141

Diagnostic information
- Design, description . . . 141, 144
- DeviceCare . . . 143
- FieldCare . . . 143
- LED . . . 138
- Local display . . . 140
- Overview . . . 146
- Remedial measures . . . 146
- Web browser . . . 142

Diagnostic list . . . 166
Diagnostic message . . . 140
Diagnostics
- Symbols . . . 140

DIP switch
- see Write protection switch

Direct access . . . 55
Disabling write protection . . . 122
Display
- see Local display

Display and operating module DKX001 . . . 198
Display area
- For operational display . . . 48
- In the navigation view . . . 49

Display values
- For locking status . . . 126

Displaying the measured value history . . . 133
Disposal . . . 174

Document
Function 6
Symbols 6
Document function 6
Documentation 205
Down pipe 20

E

ECC 115
Editing view 51
Input screen 52
Using operating elements 51, 52
Electrical connection
Degree of protection 42
Measuring instrument 29
Operating tools
Via APL network 66
Via service interface (CDI-RJ45) 66
Via WLAN interface 67
RSLogix 5000 66
Web server 66
WLAN interface 67
Electromagnetic compatibility 192
Electronics module 13
Enabling write protection 122
Enabling/disabling the keypad lock 58
Environment
Storage temperature 191
Environmental conditions
Vibration resistance and shock resistance 191
Error messages
see Diagnostic messages
Event logbook 166
Ex-approval 201
Extended order code
Sensor 16
Transmitter 15

F

Field of application
Residual risks 10
FieldCare 68
Device description file 70
Function 68
Filtering the event logbook 167
Firmware
Release date 70
Version 70
Firmware history 171
Fitted electrodes 196
Flow direction 22
Flow limit 193
Function range
SIMATIC PDM 69
Functions
see Parameter

G

Galvanic isolation 186

H

Hardware write protection 124
Help text
Calling up 56
Closing 56
Explanation 56
HistoROM 117

I

Identifying the measuring instrument 14
Incoming acceptance 14
Indication
Current diagnostic event 165
Previous diagnostic event 165
Influence
Ambient temperature 190
Information about this document 6
Inlet runs 23
Input 178
Inspection
Installation 28
Installation 19
Installation conditions
System pressure 25
Installation dimensions 25
Installation location 19
Installation requirements
Adapters 25
Down pipe 20
Inlet and outlet runs 23
Installation dimensions 25
Installation location 19
Orientation 22
Partially filled pipe 20
Intended use 9
Internal cleaning 193

L

Languages, operation options 197
Line recorder 133
Local display 197
Navigation view 49
see Diagnostic message
see In alarm condition
see Operational display
Text editor 51
Low flow cut off 186

M

Main electronics module 13
Maintenance tasks 172
Replacing seals 172
Managing the device configuration 117
Manufacturer ID 70
Manufacturing date 15, 16
Materials 194
Maximum measurement error 189
Measured values
Calculated 178

Measured . . . 178
see Process variables
Measuring and test equipment . . . 172
Measuring device
Conversion . . . 173
Preparing for mounting . . . 27
Repairs . . . 173
Structure . . . 13
Measuring instrument
Disposal . . . 174
Integrating via communication protocol . . . 70
Removing . . . 174
Switch on . . . 81
Measuring principle . . . 178
Measuring range . . . 178
Measuring system . . . 178
Measuring tube specification . . . 194
Mechanical load . . . 192
Medium temperature range . . . 192
Menu
Diagnostics . . . 165
Setup . . . 82
Menus
For device configuration . . . 82
For specific settings . . . 107
Module
Analog output . . . 76
Binary input . . . 73
Binary output . . . 77
Totalizer
Totalizer . . . 75
Totalizer Control . . . 76
Volume . . . 74
Volume Totalizer Control . . . 74
Mounting dimensions
see Installation dimensions
Mounting preparations . . . 27
Mounting requirements
Vibrations . . . 25
Mounting tool . . . 26

N

Nameplate
Sensor . . . 16
Transmitter . . . 15
Navigation path (navigation view) . . . 49
Navigation view
In the submenu . . . 49
In the wizard . . . 49
Netilion . . . 172
Numeric editor . . . 51

O

Onsite display
Numeric editor . . . 51
Operable flow range . . . 180
Operating elements . . . 53, 141
Operating height . . . 191
Operating keys
see Operating elements
Operating menu
Menus, submenus . . . 45
Structure . . . 45
Submenus and user roles . . . 46
Operating philosophy . . . 46
Operation . . . 126
Operation options . . . 44
Operational display . . . 47
Operational safety . . . 10
Order code . . . 15, 16
Orientation (vertical, horizontal) . . . 22
Outlet runs . . . 23
Output signal . . . 182
Output variables . . . 182

P

Packaging disposal . . . 19
Parameter
Changing . . . 56
Entering values or text . . . 56
Parameter settings
Administration (Submenu) . . . 119
Advanced setup (Submenu) . . . 108
APL port (Submenu) . . . 84
Communication (Submenu) . . . 83
Configuration backup (Submenu) . . . 117
Configure flow damping (Wizard) . . . 105
Current input . . . 87
Current input 1 to n (Submenu) . . . 129
Current input 1 to n (Wizard) . . . 87
Current output . . . 89
Current output (Wizard) . . . 89
Data logging (Submenu) . . . 133
Define access code (Wizard) . . . 119
Device information (Submenu) . . . 169
Diagnostics (Menu) . . . 165
Display (Submenu) . . . 110
Display (Wizard) . . . 100
Double pulse output . . . 99
Double pulse output (Wizard) . . . 99
Electrode cleaning cycle (Submenu) . . . 115
Empty pipe detection (Wizard) . . . 104
Heartbeat base settings (Submenu) . . . 116
I/O configuration . . . 86
I/O configuration (Submenu) . . . 86
Low flow cut off (Wizard) . . . 102
Network diagnostics (Submenu) . . . 84
Process variables (Submenu) . . . 127
Pulse/frequency/switch output 1 to n (Submenu) 130
Pulse/frequency/switch output 1 to n (Wizard) . . . 93
Relay output . . . 97
Relay output 1 to n (Submenu) . . . 131
Relay output 1 to n (Wizard) . . . 97
Reset access code (Submenu) . . . 119
Sensor adjustment (Submenu) . . . 108
Setup (Menu) . . . 82
Simulation (Submenu) . . . 120

Status input . . . 89
Status input 1 to n (Submenu) . . . 129
Status input 1 to n (Wizard) . . . 89
System units (Submenu) . . . 85
Totalizer (Submenu) . . . 128
Totalizer 1 to n (Submenu) . . . 108
Totalizer handling (Submenu) . . . 132
Value current output 1 to n (Submenu) . . . 130
Web server (Submenu) . . . 64
WLAN settings (Wizard) . . . 113
Partially filled pipe . . . 20
Performance characteristics . . . 188
Pharmaceutical compatibility . . . 202
Post-connection check . . . 81
Post-connection check (checklist) . . . 43
Post-installation check . . . 81
Post-installation check (checklist) . . . 28
Potential equalization . . . 36
Power consumption . . . 188
Power supply failure . . . 188
Pressure Equipment Directive . . . 203
Pressure loss . . . 193
Pressure tightness . . . 193
Pressure/temperature ratings . . . 193
Process conditions
Conductivity . . . 192
Flow limit . . . 193
Fluid temperature . . . 192
Pressure loss . . . 193
Pressure tightness . . . 193
Process connections . . . 196
Product safety . . . 10
PROFINET over Ethernet-APL certification . . . 202
Protecting parameter settings . . . 122

R

Radio approval . . . 203
Read access . . . 57
Reading off measured values . . . 126
Recalibration . . . 172
Reference operating conditions . . . 188
Registered trademarks . . . 8
Remedial actions
Calling up . . . 142
Closing . . . 142
Remote operation . . . 198
Repair . . . 173
Notes . . . 173
Repair of a device . . . 173
Repeatability . . . 190
Replacement
Device components . . . 173
Replacing seals . . . 172
Requirements for personnel . . . 9
Return . . . 173

S

Safety . . . 9
Sanitary compatibility . . . 202
Serial number . . . 15, 16
Services
Maintenance . . . 172
Repair . . . 173
Setting the operating language . . . 81
Settings
Adapting the measuring device to the process conditions . . . 131
Administration . . . 118
Advanced display configurations . . . 110
Communication interface . . . 83
Current input . . . 87
Current output . . . 89
Double pulse output . . . 99
Electrode cleaning circuit (ECC) . . . 115
Empty pipe detection (EPD) . . . 104
I/O configuration . . . 86
Local display . . . 100
Low flow cut off . . . 102
Managing the device configuration . . . 117
Operating language . . . 81
Relay output . . . 97
Resetting the device . . . 169
Resetting the totalizer . . . 132
Sensor adjustment . . . 108
Simulation . . . 120
Status input . . . 89
System units . . . 85
Totalizer . . . 108
Totalizer reset . . . 132
WLAN . . . 113
Signal on alarm . . . 185
SIMATIC PDM . . . 69
Function . . . 69
SIP cleaning . . . 193
Software release . . . 70
Spare part . . . 173
Spare parts . . . 173
Special connection instructions . . . 38
Special mounting instructions
Hygienic compatibility . . . 26
Standards and guidelines . . . 203
Status area
For operational display . . . 47
In the navigation view . . . 49
Status signals . . . 140, 143
Storage concept . . . 200
Storage conditions . . . 18
Storage temperature . . . 18
Storage temperature range . . . 191
Structure
Measuring device . . . 13
Operating menu . . . 45
Submenu
Administration . . . 118, 119
Advanced setup . . . 107, 108
APL port . . . 84
Communication . . . 83
Configuration backup . . . 117

Current input 1 to n . . . 129
Data logging . . . 133
Device information . . . 169
Display . . . 110
Electrode cleaning cycle . . . 115
Event logbook . . . 166
Heartbeat base settings . . . 116
Heartbeat setup . . . 116
I/O configuration . . . 86
Input values . . . 128
Measured values . . . 126
Network diagnostics . . . 84
Output values . . . 130
Overview . . . 46
Process variables . . . 127
Pulse/frequency/switch output 1 to n . . . 130
Relay output 1 to n . . . 131
Reset access code . . . 119
Sensor adjustment . . . 108
Simulation . . . 120
Status input 1 to n . . . 129
System units . . . 85
Totalizer . . . 128
Totalizer 1 to n . . . 108
Totalizer handling . . . 132
Value current output 1 to n . . . 130
Web server . . . 64
Supply voltage . . . 187
Surface roughness . . . 196
Switching output . . . 184
Symbols
Controlling data entries . . . 52
For communication . . . 47
For diagnostic behavior . . . 47
For locking . . . 47
For measured variable . . . 48
For measurement channel number . . . 48
For menus . . . 49
For parameters . . . 49
For status signal . . . 47
For submenu . . . 49
For wizards . . . 49
In the status area of the local display . . . 47
Input screen . . . 52
Operating elements . . . 51
System design
Measuring system . . . 178
see Measuring device design
System integration . . . 70
System pressure . . . 25
System redundancy S2 . . . 80

T

Technical data, overview . . . 178
Temperature measurement response time . . . 190
Temperature range
Ambient temperature for display . . . 197
Storage temperature . . . 18
Terminal assignment . . . 31
Terminals . . . 188
Tests and certificates . . . 203
Text editor . . . 51
Tool
For mounting . . . 26
Transportation . . . 18
Tool tip
see Help text
Tools
Electrical connection . . . 29
Totalizer
Assign process variable . . . 128
Configuring . . . 108
Totalizer Control module . . . 76
Totalizer module . . . 75
Transmitter
Turning the display module . . . 28
Turning the housing . . . 27
Transporting the measuring instrument . . . 18
Troubleshooting
General . . . 136
TSE/BSE Certificate of Suitability . . . 202
Turning the display module . . . 28
Turning the electronics housing
see Turning the transmitter housing
Turning the transmitter housing . . . 27

U

UKCA marking . . . 201
Use of the measuring instrument
Borderline cases . . . 9
Incorrect use . . . 9
see Intended use
User roles . . . 46
USP Class VI . . . 202

V

Version data for the device . . . 70
Vibration resistance and shock resistance . . . 191
Vibrations . . . 25
Volume module . . . 74
Volume Totalizer Control module . . . 74

W

W@M Device Viewer . . . 14
Weight
Transport (notes) . . . 18
Wizard
Configure flow damping . . . 105
Current input 1 to n . . . 87
Current output . . . 89
Define access code . . . 119
Display . . . 100
Double pulse output . . . 99
Empty pipe detection . . . 104
Low flow cut off . . . 102
Pulse/frequency/switch output 1 to n . . . 93
Relay output 1 to n . . . 97
Status input 1 to n . . . 89

WLAN settings 113
WLAN settings 113
Workplace safety 10
Write access 57
Write protection
Via access code 122
Via write protection switch 124
Write protection switch 124

71756569

www.addresses.endress.com

For more Endress+Hauser product please visit: www.ainstru.com
Mail: Sales@ainstru.com

Endress+Hauser

People for Process Automation