BA02361F/00/EN/02.24-00
71696565
2024-11-11



# Operating Instructions
# **Source container FQG74**

Radiometric level measurement
Source container with up to 20 radiation sources

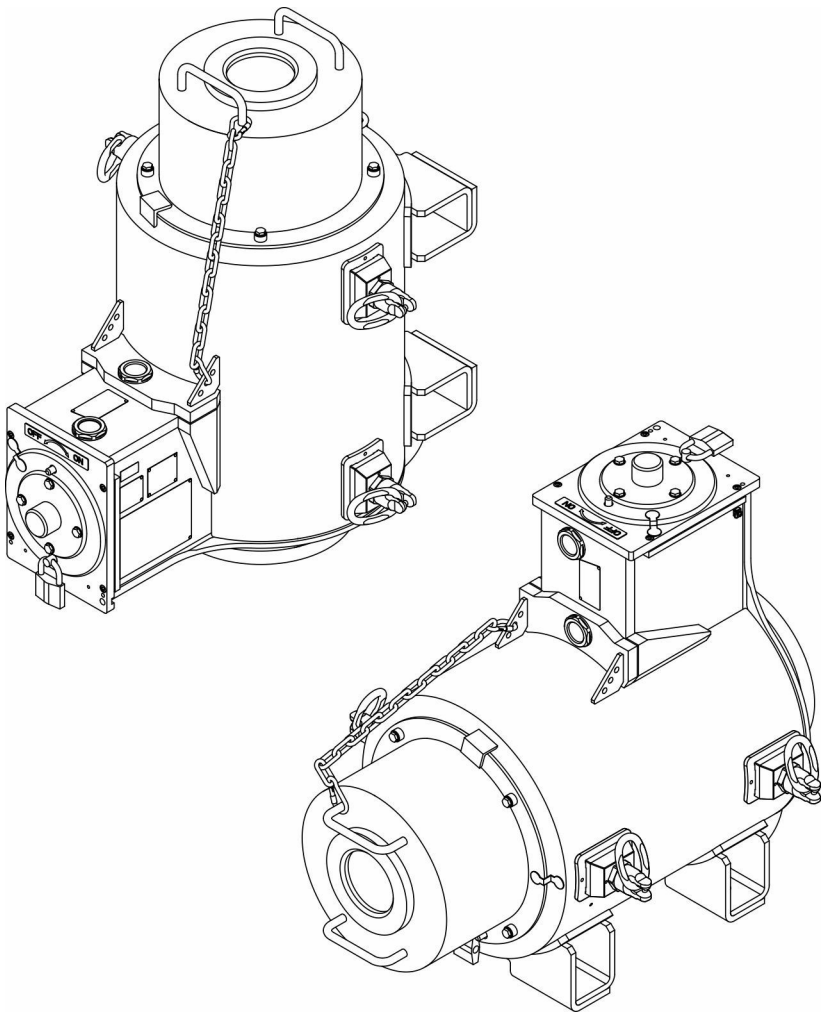

Endress+Hauser
People for Process Automation

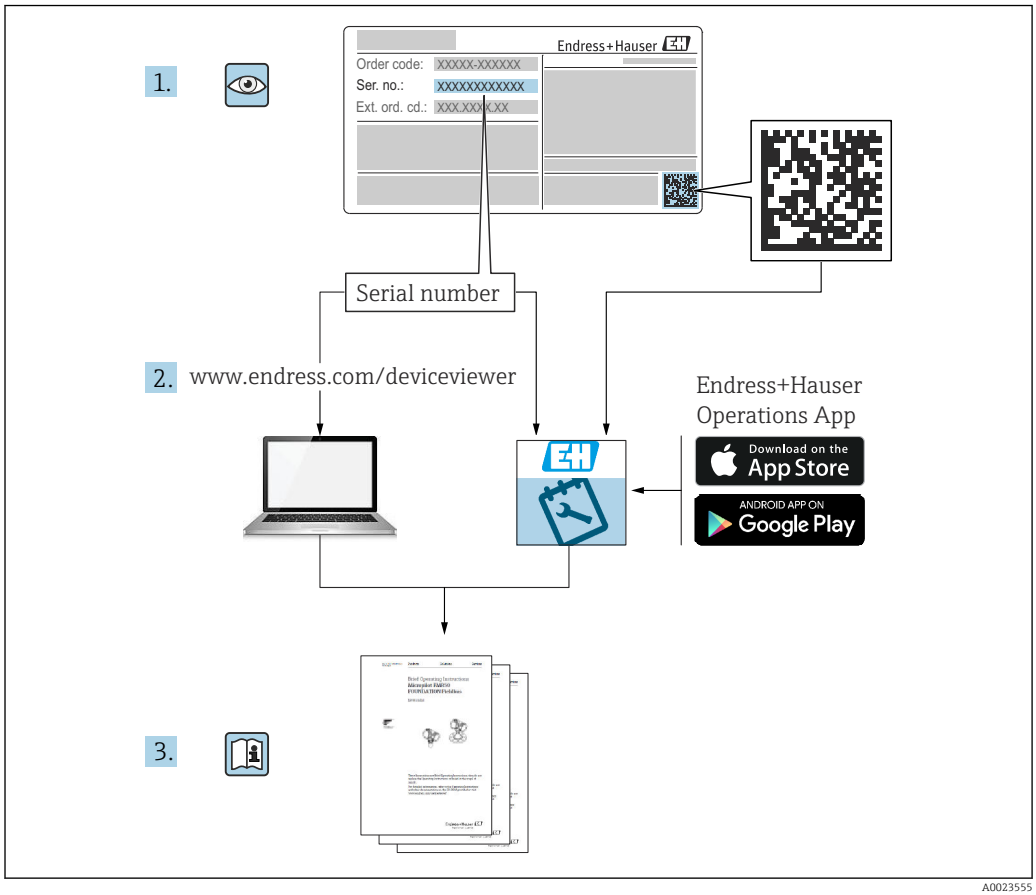


- Make sure the document is stored in a safe place such that it is always available when working on or with the device
- Avoid danger to individuals or the facility: read the "Basic safety instructions" section carefully, as well as all other safety instructions in the document that are specific to working procedures

The manufacturer reserves the right to modify technical data without prior notice. The Endress+Hauser sales organization will supply you with current information and updates to these instructions.

# Table of contents


**1 About this document . . . . 4**
1.1 Dokumentfunktion . . . . 4
1.2 Symbols . . . . 4
1.3 Documentation . . . . 5

**2 Basic safety instructions . . . . 6**
2.1 Requirements concerning personnel . . . . 7
2.2 Intended use . . . . 8
2.3 Workplace safety . . . . 9
2.4 Operational safety . . . . 9
2.5 Product safety . . . . 10
2.6 Basic instructions for use, transport, and storage . . . . 10
2.7 General instructions on radiation protection . . . . 11
2.8 Legal regulations for radiation protection . . . . 12
2.9 Supplementary safety instructions . . . . 13

**3 Product description . . . . 13**
3.1 Product design . . . . 13
3.2 Shutter . . . . 14
3.3 Source magazine . . . . 15
3.4 Source holder . . . . 16
3.5 Radiation sources . . . . 17
3.6 Radiation warning signs . . . . 18
3.7 Rope extension . . . . 18
3.8 Anti-theft and tamper protection . . . . 19
3.9 Installation adapter . . . . 20
3.10 Use as Type A packaging . . . . 21

**4 Incoming acceptance and product identification . . . . 22**
4.1 Incoming acceptance and unpacking . . . . 22
4.2 Product identification . . . . 25

**5 Transport and storage . . . . 27**
5.1 Transport as Type A package . . . . 28
5.2 Dimensions, weights . . . . 29
5.3 Handling . . . . 30
5.4 Turning process . . . . 33
5.5 Storage . . . . 35

**6 Installation . . . . 35**
6.1 Installation requirements . . . . 36
6.2 Orientation . . . . 37
6.3 Required tools . . . . 40
6.4 Installing the source container . . . . 40
6.5 Mounting check . . . . 44
6.6 Removing the source container from the measuring point . . . . 45

**7 Commissioning . . . . 48**
7.1 Preliminaries . . . . 48
7.2 Switch on radiation . . . . 51
7.3 Measuring the local dose rate . . . . 54
7.4 Switch off radiation . . . . 54
7.5 Loading and exchanging the radiation sources . . . . 58

**8 Maintenance . . . . 58**
8.1 Recurrent tests . . . . 58
8.2 Maintenance work . . . . 69
8.3 Measuring and test equipment . . . . 74
8.4 Endress+Hauser services . . . . 74

**9 Repair . . . . 74**
9.1 General notes . . . . 75
9.2 Spare parts . . . . 75
9.3 Endress+Hauser services . . . . 75
9.4 Return . . . . 75
9.5 Source container disposal . . . . 77

**10 What to do in an emergency . . . . 78**
10.1 Radiation source no longer at the intended location . . . . 78
10.2 Source container or ionizing radiation cannot be switched off . . . . 79
10.3 Source container damaged . . . . 80
10.4 Contamination detected . . . . 81
10.5 Notifying the responsible authorities and Endress+Hauser . . . . 81

**11 Accessories . . . . 81**

**12 Technical data . . . . 82**

# 1 About this document

## 1.1 Dokumentfunktion

Diese Anleitung liefert alle Informationen, die in den verschiedenen Phasen des Lebenszyklus des Geräts benötigt werden: Von der Produktidentifizierung, Warenannahme, Transport und Lagerung über Montage, Bedienungsgrundlagen und Inbetriebnahme bis hin zur Störungsbeseitigung, Wartung und Entsorgung.

## 1.2 Symbols

### 1.2.1 Safety symbols

**⚠ DANGER**
This symbol alerts you to a dangerous situation. Failure to avoid this situation will result in serious or fatal injury.

**⚠ WARNING**
This symbol alerts you to a potentially dangerous situation. Failure to avoid this situation can result in serious or fatal injury.

**⚠ CAUTION**
This symbol alerts you to a potentially dangerous situation. Failure to avoid this situation can result in minor or medium injury.

**NOTICE**
This symbol alerts you to a potentially harmful situation. Failure to avoid this situation can result in damage to the product or something in its vicinity.

### 1.2.2 Radiation warning sign

Warning symbol for radioactive source according to ISO 7010

**Warning sign for ionizing radiation**
Identification of places and objects in and around which the presence of ionizing radiation is to be expected.

Warning symbol for highly radioactive source according to ISO21482

**High radiation warning sign**
- Warns of highly radioactive substances or ionizing radiation.
- Highly radioactive sources are marked separately on the source containers with the wording "highly radioactive source" and the supplemental warning symbol according to ISO21482.

### 1.2.3 Symbols for certain types of information and graphics

**Permitted**
Procedures, processes or actions that are permitted

**Forbidden**
Procedures, processes or actions that are forbidden

**Tip**
Indicates additional information

Reference to documentation

Reference to graphic

Notice or individual step to be observed

1., 2., 3.
Series of steps

Result of a step

**1, 2, 3, ...**
Item numbers

**A, B, C, ...**
Views

→ **Safety instructions**
Observe the safety instructions contained in the associated Operating Instructions

### 1.2.4 Tool symbols

Phillips head screwdriver

Flat-blade screwdriver

Torx screwdriver

Allen key

Open-ended wrench

Wire cutter

## 1.3 Documentation

For an overview of the scope of the associated Technical Documentation, refer to the following:
- *Device Viewer* (www.endress.com/deviceviewer): Enter the serial number from the nameplate
- *Endress+Hauser Operations app*: Enter serial number from nameplate or scan matrix code on nameplate.

# 2 Basic safety instructions

**⚠ DANGER**

**Danger from ionizing radiation in case of incorrect handling or a defective source container**

Hazard for persons and the environment posed by ionizing radiation and contamination. Ionizing radiation and contamination could increase the risk of cancer and the risk of genetic birth defects. Depending on the dose received, ionizing radiation could lead to immediate physical harm, such as nausea, vomiting, hair loss, changes to blood count, serious tissue damage and even death.

- **The instructions and warning notes in this manual relating to dangers to health posed by ionizing radiation and contamination must be strictly observed. Disregard for these instructions and warning notes could lead to serious injuries or death and hazards for the environment.**
- Observe applicable national requirements for radioactive radiation sources. Observe requirements for fire protection measures in particular.
- Observe the conditions of use of radiation sources with respect to environmental conditions (e.g. vibration or operating temperature).
- In cases of doubt, contact the responsible radiation safety officer, the responsible national inspectorate or the manufacturer.

In this manual, warnings about potential risks from ionizing radiation are marked with the warning symbol ☢.

**⚠ DANGER**

**Danger from ionizing radiation if radiation sources lost**

If radiation sources are lost, there is a danger to the general public and the environment

- **The instructions and warning notes in this manual relating to dangers to health posed by ionizing radiation and contamination must be strictly observed. Disregard for these instructions and warning notes could lead to serious hazards for the environment and public safety.**
- Observe applicable national requirements for anti-theft measures for radioactive radiation sources throughout the entire life cycle (from delivery to disposal).
- There is a risk of radioactive material being used for criminal or premeditated unauthorized acts, which poses a threat to public safety.

**⚠ WARNING**

**Risk of accident from heavy gross weight**

During assembly: If source containers are assembled incorrectly, there is an impact danger to persons in the event of a dropped load and a risk of serious damage to physical items. During transport: In the event of incorrect or unsecured transport of the source container and overpack (loads), there is a risk that persons could go unnoticed or suffer impact because it is not possible to stop in time. Due to a high center of gravity or uneven weight distribution, there is also the risk of the load tipping, which poses a serious risk of personal injury. For suspended loads: There is the danger of persons being impacted by falling loads or parts thereof, of being impacted by moving suspended loads or of bumping into stationary suspended loads. Parts of the overpack and attachment parts of the source container could weigh over 18 kg.

- Observe the assembly instructions.
- Inspect the assembly diligently and check at regular intervals.
- Observe safety instructions and transport conditions for heavy loads.
- Wear personal protective equipment.
- Lift source containers only at the defined lifting points.
- Use only appropriate lifting accessories for the load.
- During assembly and transport, only those persons who are directly involved and have knowledge of guidance and requirements may be present in the danger zone.
- During transport, the center of gravity of the packaging must be taken into consideration and a suitable surface must be ensured.

**⚠ CAUTION**

**Risk of burns from hot components**

Components could heat up as a consequence of high temperatures in the process. These high component temperatures could lead to burn injuries.

- Wear personal protective equipment, such as correctly sized heat-resistant gloves.
- Define organizational measures for protection from hot parts (particularly process adapters, source magazine and rope extensions). Equipment operators must be warned of the danger posed by hot parts on the source container, e.g. in the form of notices and training.
- The plant operator is responsible for ensuring that the radiation sources can be safely set to the "AUS/OFF" switch position in an emergency. A risk of injury from hot parts on the source container must be taken into consideration.
- If possible, allow the process to cool down before the ropes are retracted.

## 2.1 Requirements concerning personnel

**⚠ WARNING**

**Danger from inadequately qualified personnel.**

Physical damage and personal injury. Particularly as a consequence of incorrect handling.

- The requirements for personnel described below are mandatory for the plant operator.

### Operating personnel

The operating personnel are responsible for operation and monitoring. They switch the radiation on or off, for example. The operating personnel

- must be instructed and authorized by the plant operator according to the requirements of the task, and
- must have a relevant qualification for this specific function and task, in accordance with the relevant national requirements.

### Installation and service personnel

The installation and service personnel are responsible for installation, commissioning, maintenance, monitoring, and removal. They must strictly meet the following requirements:

- They must be trained, qualified specialists, having a relevant qualification for this specific function and task, in accordance with the relevant national requirements.
- They must be authorized by the plant operator.
- They must be familiar with federal/national regulations.

### Authorized repair personnel

Authorized repair personnel are

- qualified specialists having the appropriate qualification for the relevant function and task and meeting the relevant national requirements,
- authorized by the plant operator and
- familiar with national regulations.

### Maintenance personnel – radiation

The maintenance personnel – radiation carry out maintenance work involving the radiation source or are responsible for its removal or replacement. The maintenance personnel – radiation are

- accredited and monitored in relation to radiation exposure
- specialists qualified in radiation protection and
- authorized by the plant operator.

**Transport personnel**

Transport personnel transport the product or parts thereof from, for example, the manufacturer or storage location to the point of use. Transport personnel
- are qualified to transport "Class 7 dangerous goods".

**Disposal personnel**

Disposal personnel dispose of the product or parts thereof. Disposal personnel are
- accredited and monitored in relation to radiation exposure,
- specialists qualified in radiation protection and
- authorized by the disposal company.

**Radiation safety officer**

The radiation safety officer is responsible for compliance with all applicable laws and regulations. The company/plant operator must nominate a radiation safety officer in accordance with applicable national legislation. The radiation safety officer is, among other things, responsible for
- monitoring the source container at the respective point of use,
- the training of employees in the context of radiation protection and
- developing and implementing measures in an emergency. The radiation safety officer is therefore reachable at all times.

The radiation safety officer is
- qualified for the task,
- a nationally recognized person for the task and
- a specialist authorized by the plant operator.

## 2.2 Intended use

The source containers shield the radiation from the environment, only allowing radiation to escape during measurement operations within the measuring application.

The source containers described in this document contain the radioactive sources of radiation used for radiometric limit measurement, level measurement and density measurement.

The following are considered intended uses:
- Use as a transport and storage vessel according to hazardous class 7 and as source container in the measuring application
- Exclusive use with radioactive, double-encapsulated materials in special form, in accordance with ISO 2919
- Replacement of radiation sources when using the same source capsule type
- Use in measurement operation within stationary processes.

For designated use, the following conditions must be met:
- The instructions and handling guidelines in the Operating Instructions, particularly the radiation protection instructions, must be followed.
- Areas of use must be within the limits of technical specifications.
- Only the radiation sources specified in the technical specifications must be used, in compliance with the maximum activity levels specified there.

### 2.2.1 Foreseeable incorrect use

The following is not permitted:
- Operation outside the technical specifications
- Installing the source container on its feet in a vertical position
- Installing the source container in measuring applications with the flange not pointing downwards
- Upright transport of the source container on a pallet where the source container is not mounted on its transport feet
- Attaching the lifting gear to points not intended for this purpose

- Permanent process installation of the source container in a suspended state
- Commissioning or switching on radiation while the source container is in a suspended state
- Transporting the source containers with an open shutter
- Use with insufficient protection of the radiation sources against corrosion (see the following note)

Protection of radiation sources in measuring applications against corrosion is ensured through:
- Appropriate material selection of the protection pipe
- Monitoring or, if necessary, double-walled design of the protection pipe.
- The operator is responsible for ensuring radiation source protection through the protection pipe.

Endress+Hauser assumes no liability for damages resulting from improper use.

## 2.3 Workplace safety

**For work on and with the device**

1. In case of any doubt in relation to correct handling, contact Endress+Hauser Service.
2. Make detailed preparations to ensure that the source container is installed as quickly and efficiently as possible. Provide all necessary tools and equipment before starting work.
3. Observe all instructions in this manual when working on the source container.
4. When working with radiation sources, avoid any unnecessary exposure to radiation.
5. Keep all unavoidable radiation exposure to a minimum.
6. Implement suitable measures (e.g. blocking of access, shielding) to prevent danger to people.
7. Observe applicable national requirements.

**Lowering or raising of source holders**

When the source holders are being lowered or raised, the radiation sources are outside the source container. The shielding effect of the source container or the process is then not given.

1. Make detailed preparations to ensure that the source holders are lowered or raised as quickly and efficiently as possible.
2. Compliance with the required protective measures for personnel and the environment.
3. Only the required, authorized personnel are permitted in the danger zone.
4. The dimensions of the danger zone must be determined and cordoned off accordingly in accordance with the applicable national requirements.

**Use of the lifting points**

- The supplied safety instructions for the lifting points must be strictly observed.

## 2.4 Operational safety

The “protection from radioactive radiation” function could be affected by damage, tampering, modification or repair. There is a threat of radiation damage or extremely serious injuries.

In cases of doubt in relation to operational safety, the source container must not continue to be used under any circumstances.

The product's suitability as a source container and as a shipping package for the transport of radioactive materials of special form is ensured only when
- all checks and maintenance have been carried out to the manufacturer's specifications and
- no modifications or tampering have been carried out.

The manufacturer offers no guarantee of after-sales service or take-back if modifications have been carried out.

Maintaining operational safety:
- ▶ By carrying out maintenance and formal periodic inspections, make sure that the device is in technically flawless and operationally safe condition.
- ▶ Check moving parts, particularly the closing mechanism, regularly. It must be possible for the radiation to be switched off at any time.
- ▶ If the application is designed to have radiation sources lowered into the process, retrievability of the radiation sources must be ensured at all times. In particular, the ropes and source holders must be checked for corrosion and correct operation.
- ▶ Adapt checking intervals to environmental conditions. Check more frequently in harsh and corrosive environments.

**Modification**
Modifications and attachments to the source container are not permitted without the express written authorization of Endress+Hauser.

**Repair**
- Do not carry out any repairs unless they are permitted repairs. Permitted repairs are described in this operating instructions manual or reference is made in this manual to the appropriate repair documents.
- Use only original spare parts and original accessories.
- Observe notes on radiation protection, particularly self-protection, hazards to third parties, and compliance with legal requirements.

**Tampering**
- No tampering with the source container is permitted.
- For source containers with a rope extension, no tampering with the rope extension is permitted. If other rope lengths are required to be able to lower radiation sources into the process, only the original parts of Endress+Hauser may be used.
- Endress+Hauser offers no guarantee of after-sales service or take-back in this case.

## 2.5 Product safety

This state-of-the-art device is designed and tested in accordance with good engineering practice to meet operational safety standards. It left the factory in a condition in which it is safe to operate.

It meets general safety requirements and legal requirements.

## 2.6 Basic instructions for use, transport, and storage

The handling of radioactive radiation sources involves particular risks and dangers and therefore requires special care.

**For safe and legal handling**

1. Observe the applicable regulations and national/international standards.
2. Comply with radiation protection regulations when using, storing and working with the radiometric measuring system.

**If there is any suspicion of improper condition of a plant with radiometric measuring system**

1. Inform the radiation safety officer immediately.
2. Check the area around the device for signs of increased radiation or contamination. See section "What to do in an emergency"

**In the event of defects**

1. Inform the radiation safety officer immediately.
2. Do not continue to use the device, withdraw it from service as quickly as possible and exchange it.
3. Conduct the required leak test according to the applicable regulations and instructions.

**Minimizing the hazard potential through good planning and careful conduct**

1. The radiation may be switched on only by instructed personnel.
2. Before switching on the radiation, make sure that no-one is in the radiation zone (or inside the product vessel).
3. Heed warning signs and observe controlled areas.
4. When operating, transporting and storing the device, protect it against extreme influences (e.g. chemical products, weather, mechanical impacts, vibrations).
5. Carry out recurrent checks at regular intervals. These include, for example, checking for safe securement of the source container, checking safety measures or checking for sound condition.

**For storage and transport**

1. Attach transport locks before each transport.
2. Always secure the "AUS/OFF" switch position by using the transport lock and padlock.
3. Carry out recurrent checks before dispatch.
4. Observe the center of gravity and weight information on the packaging.

**For use in a potentially explosive atmosphere**

1. The use of the radiometric measurement method in potentially explosive atmospheres must be specially checked and implemented by the plant operator based on applicable national rules and regulations.
2. Integrate the device into the potential equalization system of the plant.

## 2.7 General instructions on radiation protection

When working with radioactive radiation sources, avoid any unnecessary exposure to radiation. All unavoidable radiation exposure must be kept to a minimum. Three basic concepts apply to achieve this:

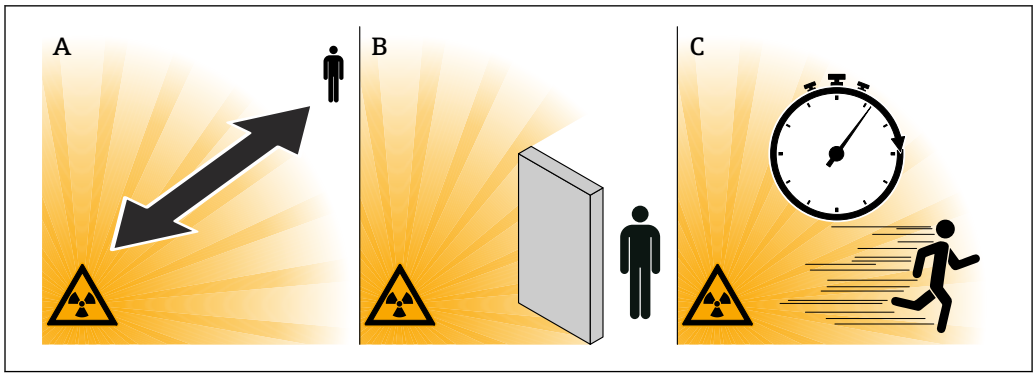


1 *Protective measures*

*A Distance*
*B Shielding*
*C Time*

**Distance**

Keep as far away from the radiation source as possible.

The local dose rate decreases in proportion to the square of the distance from the radiation source.

**Shielding**

Ensure the best possible shielding between the radiation source and personnel.

Effective shielding is provided by source containers and high-density materials (e.g. lead, iron, concrete).

**Time**

Keep the time spent in the area exposed to radiation as short as possible.

## 2.8 Legal regulations for radiation protection

The handling of radioactive radiation sources is regulated by law. The radiation protection regulations of the country in which the plant is operated are of overriding importance and must be strictly observed. In the Federal Republic of Germany, the current versions of the Radiation Protection Act and the Radiation Protection Directive apply. The following points derived from this Ordinance are particularly important for radiometric measurement:

**Handling permit**

A handling permit is required by the operator of a plant that uses gamma radiation. Permit applications are made to the local state government or the authority responsible (State Offices for Environmental Protection, Trade Inspection Offices, etc.). The Endress+Hauser sales organization will be happy to help you obtain the handling permit.

**Radiation safety officer**

The plant operator must appoint a radiation safety officer (RSO) who has the necessary specialist knowledge and who is responsible for observing the Radiation Protection Ordinance and all radiation protection procedures.

Endress+Hauser offers training courses in which individuals can acquire the necessary specialist knowledge.

**Plant operator**

The plant operator is responsible for ensuring compliance with all national radiation protection regulations. The operator must also ensure safe operation and adequate qualification of the personnel involved.

**Controlled area**

Only persons who are exposed to radiation during the course of their job and are subject to official personal dose monitoring procedures may work in controlled areas (i.e. areas where the local dose rate exceeds a specific value). The limit values for the controlled area are specified in the current Radiation Protection Ordinance applicable for your area.

For further information on radiation protection and regulations in other countries, please contact the relevant Endress+Hauser sales organization.

## 2.9 Supplementary safety instructions

**Fire and anti-theft protection**
To design a safe installation, keeping and storage of the radiation sources, observe the safety measures for the radiation source with respect to fire and anti-theft protection. Implement requirements in accordance with applicable national legislation.

**Handling of lead**
This device contains more than 0.1% lead with CAS No. 7439-92-1. With the source container in undamaged condition, there is no direct contact with lead.
If the source container suffers damage, national regulations for the handling of lead must be observed.

# 3 Product description

## 3.1 Product design

### 3.1.1 Overview of source container

The housing of the source container is filled with lead to shield the radiation sources stored within the source container.

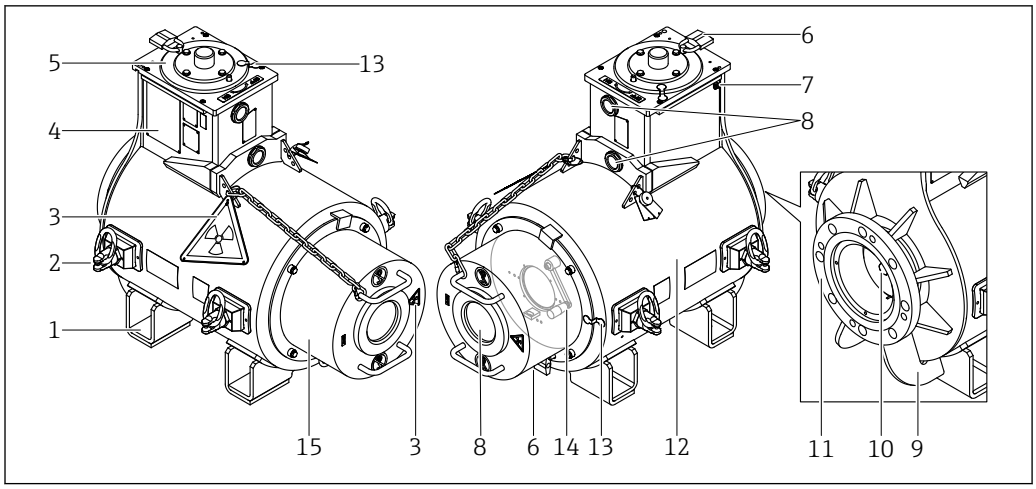


2 *Positional overview of the source container*

1 *Transport feet*
2 *Lifting point (RUD PP-B-1.5t-M16)*
3 *Radiation symbol*
4 *Sign holders (for fitting nameplates)*
5 *Twist protection/cover shutter*
6 *Lock*
7 *Ground terminal*
8 *Window*
9 *Skids for setting up the source container*
10 *Transportation lock*
11 *Connecting flange*
12 *Source container housing*
13 *Protective seal*
14 *Crank for shutter*
15 *Cover*

The cover and shutter cover are each secured with a lock.

The cover includes a window that can be used to see whether the radiation sources have been lowered into the process.

## 3.2 Shutter

Inside the housing, there is a guide shaft in which the shutter can be moved by a spindle connected to a crank. The crank is located under the cover.

The position (ON/OFF) of the shutter can be observed through two windows.

In both the ON and OFF positions, a cover is mounted on the drive side. This cover has an anti-twist lock and prevents the spindle from turning. This prevents unintentional displacement of the shutter. The cover also serves as a seal. The cover is secured with a lock.

A transport lock is fitted for transportation and also serves as a seal on the flange side.

**Position of the shutter**

- "OFF/AUS" position: The shutter is fully inserted into the source container, and the transport lock is screwed into the shutter. This ensures that the shutter cannot be moved during transport,
  providing maximum shielding of the radiation sources.
- "ON/AN" position: The radiation sources can be lowered into the tank.

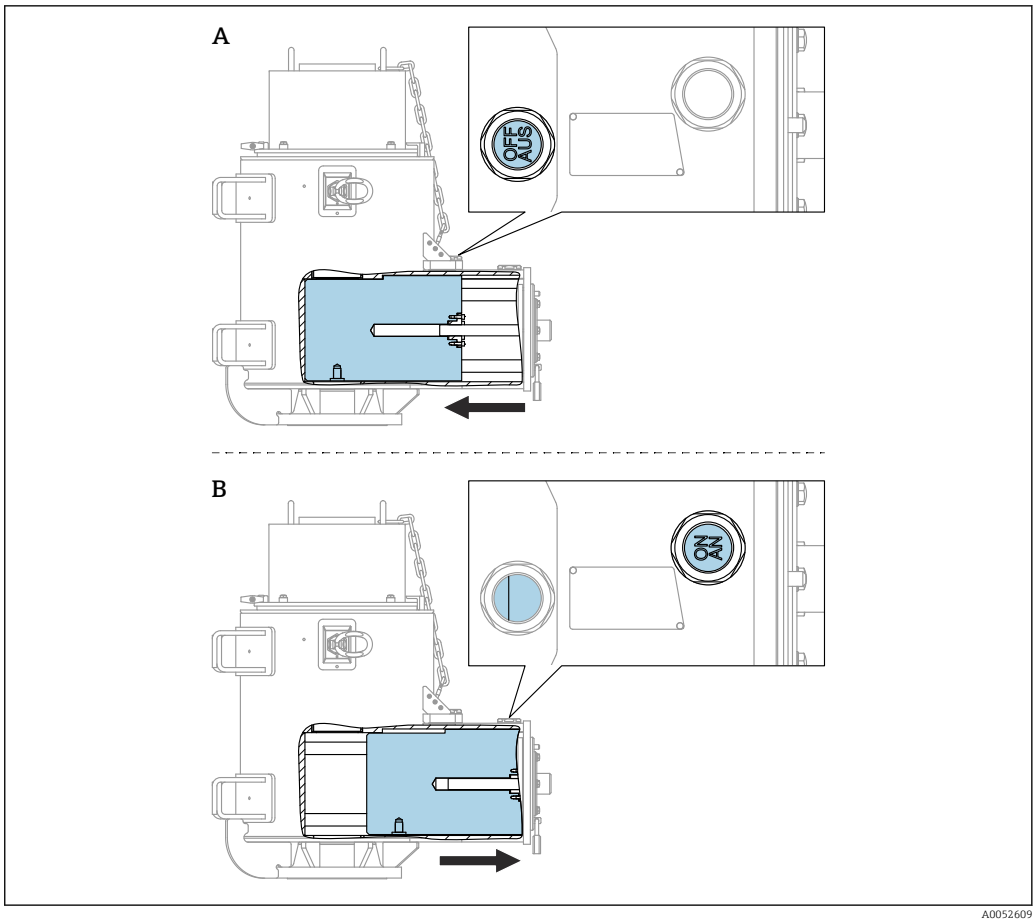


A0052609

3 *Position of the shutter*

*A Source container in "OFF/AUS" position*
*B Source container in "ON/AN" position*

## 3.3 Source magazine

### 3.3.1 Source magazine, 20-position

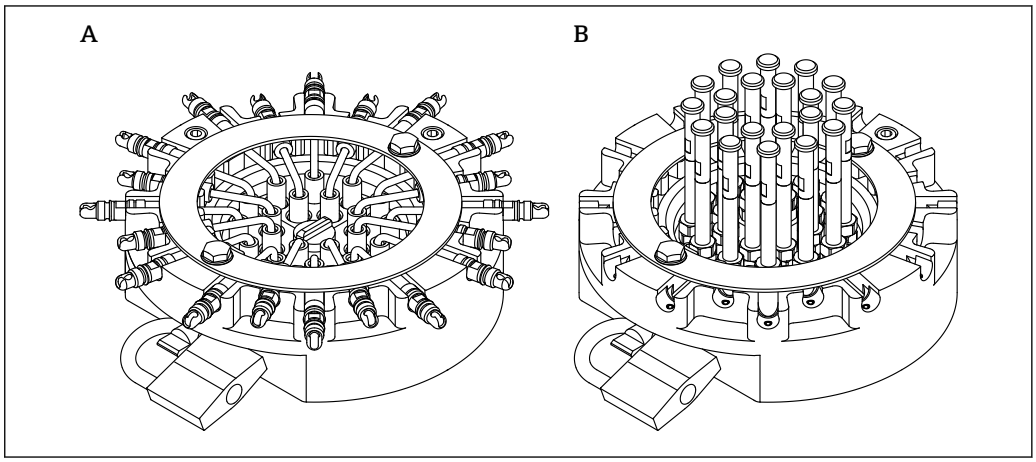


A0054620

4 *Fixing ring with 20 detachable radiation sources*

*A Source holder in "OFF/AUS" position with retaining ring*
*B Source holder in "ON/AN" position with retaining ring and mounted rope extensions*

### 3.3.2 Source magazine, 12-position

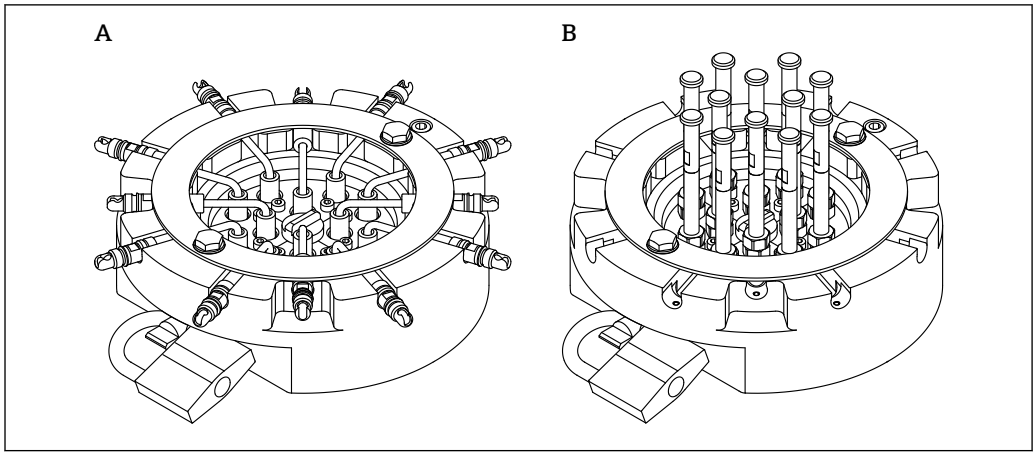


A0054619

*5 Fixing ring with 12 detachable radiation sources*

*A Source holder in "OFF/AUS" position with retaining ring*
*B Source holder in "ON/AN" position with retaining ring and mounted rope extensions*

## 3.4 Source holder

There are two different versions of source holders.
- Rigid version, designed for straight protection pipes
- Flexible version, designed for curved protection pipes

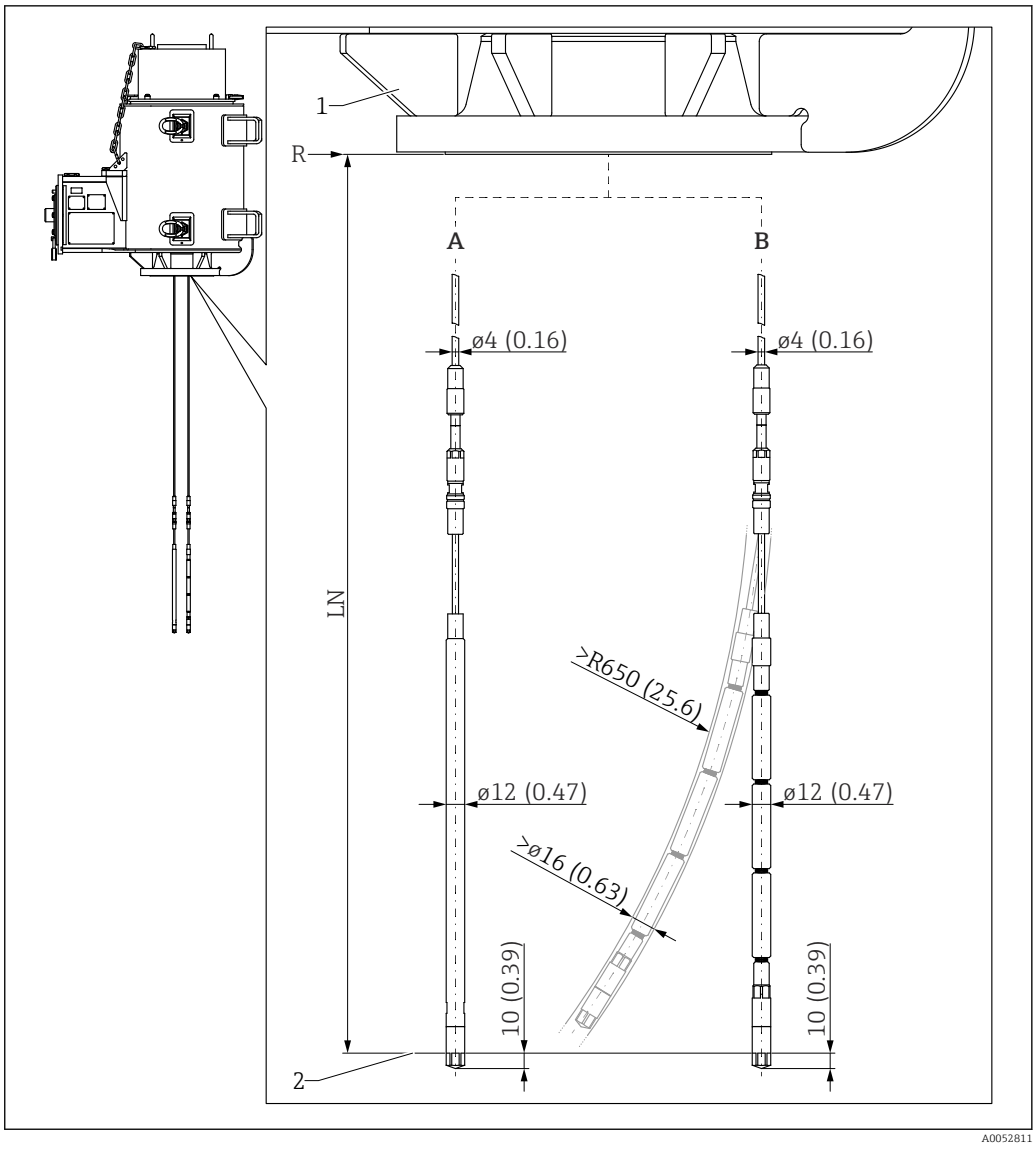


6 *Source holder versions*

*1 Source container*
*A Rope extension with rigid source holder (feature 025; option "A1", "B1")*
*B Rope extension with flexible source holder (feature 025; option "B3")*
*R Reference point*
*LN Variable nominal length (depending on order)*

## 3.5 Radiation sources

The radiation sources used are provided in the product structure.

The radiation sources are accommodated in the source holder protection cap (front part of the source holder).

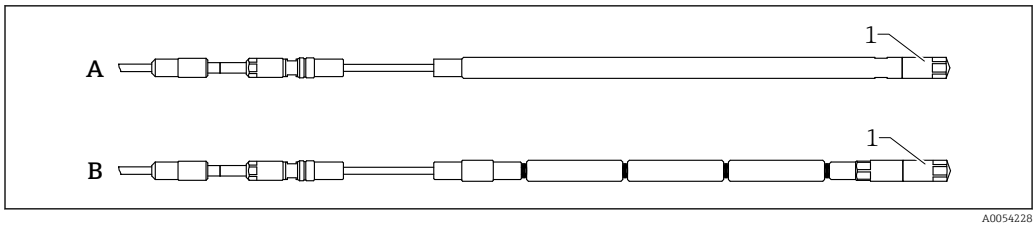


7 *Source holder with source holder protection cap*

*A Rigid source holder*
*B Flexible source holder*
*1 Source holder protection cap*

## 3.6 Radiation warning signs

- The radiation warning signs warn of radioactive radiation.
- The radiation warning signs must be fitted in the appropriate places.

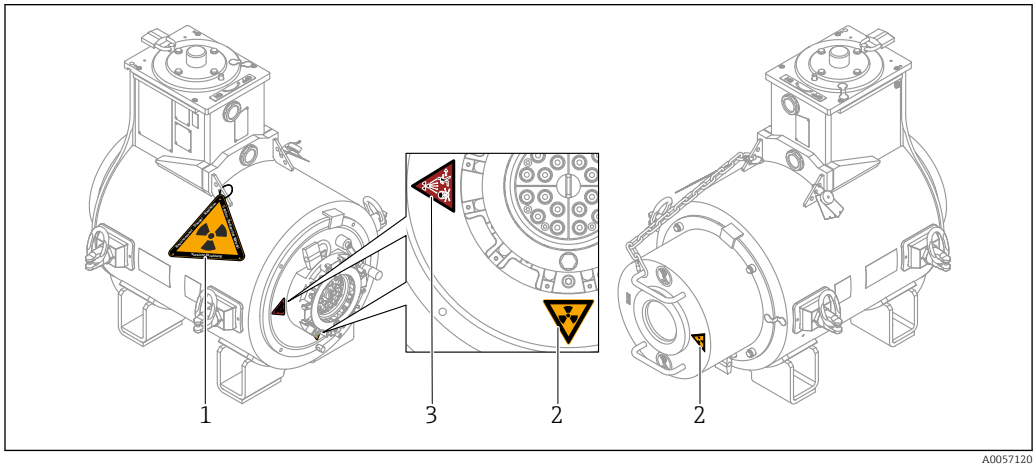


8 *Position of radiation warning signs*

*1 "Caution Radiation" warning sign in stainless steel*
*2 "Radioactive" stick-on label*
*3 "Highly radioactive" stick-on label, only for highly radioactive radiation sources*

## 3.7 Rope extension

The rope extensions are available in different lengths (up to max. 30 m (98.4 ft)).

Rope extensions are screwed to the rope separators to allow the radiation sources to be lowered.

After the counter nut has been loosened, the length of the rope extension can be changed by 40 mm (1.57 in) with fine adjustment.

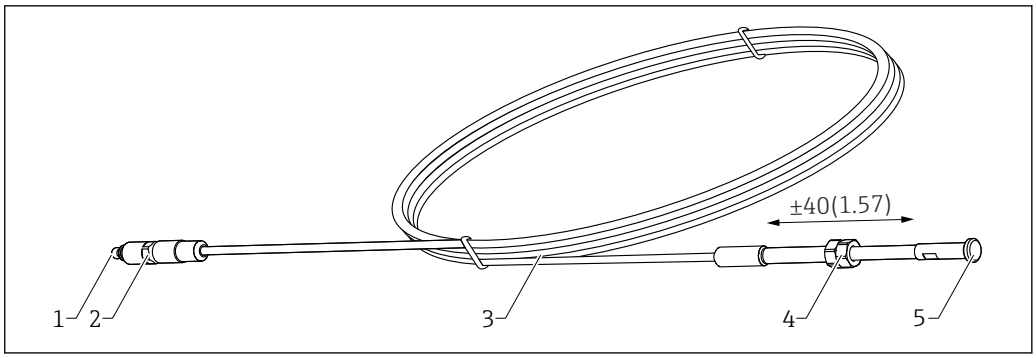


A0055783

9 *Rope extension*

1 *Ball head*
2 *Locking sleeve, can be screwed, after the ball head engages*
3 *Extension rope*
4 *Counter nut for the fine position adjustment of the radiation source*
5 *Item number of the source holder*

## 3.8 Anti-theft and tamper protection

### 3.8.1 Tamper protection

These locks prevent unauthorized tampering with the source container.

**Cover lock**

This lock prevents unauthorized access to internal parts of the source container.

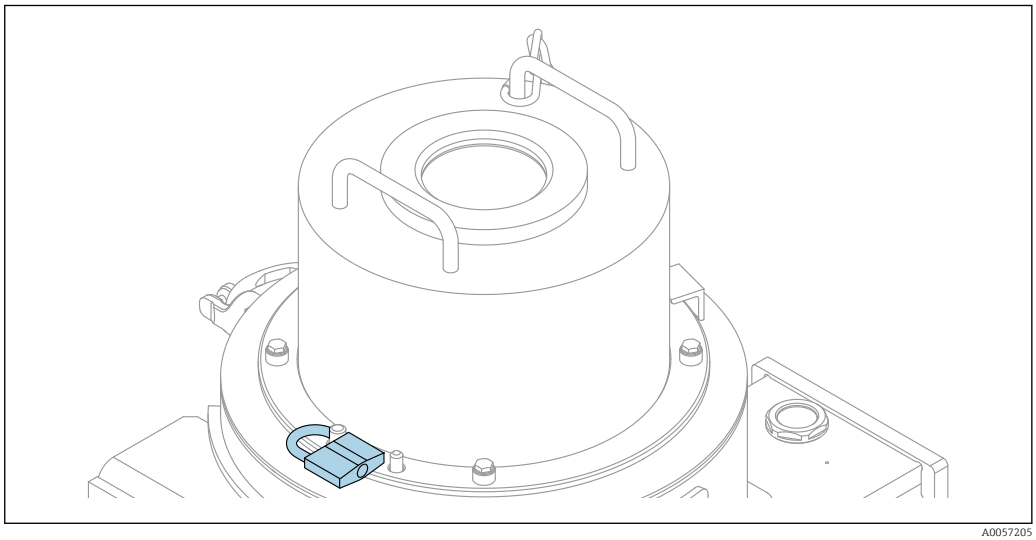

A0057205

10 *Cover lock*

**Twist protection lock**

This lock prevents unauthorized opening and closing of the shutter.

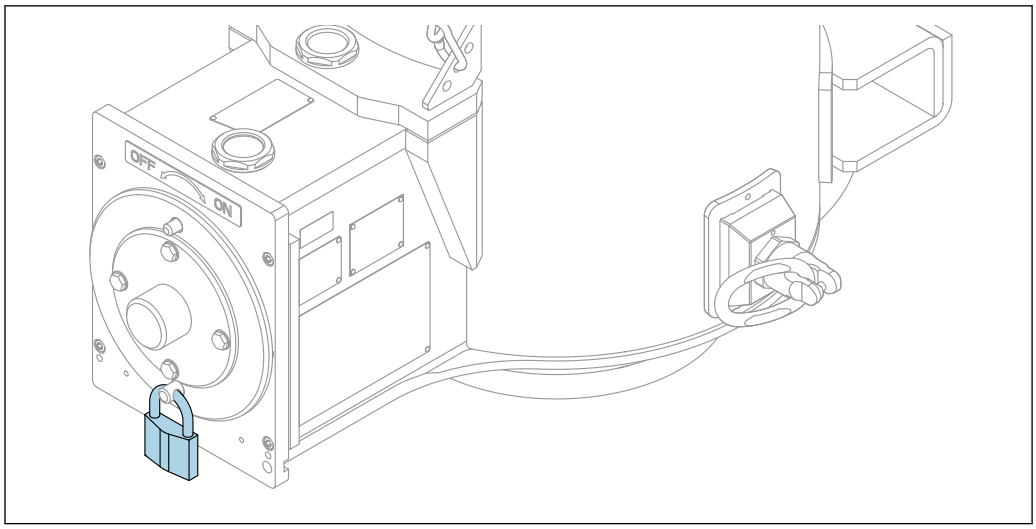


A0057206

11 *Twist protection lock*

### 3.8.2 Theft protection

This lock prevents the unauthorized removal of the radiation sources. The theft protection lock must not be removed.

**For Germany:** The theft protection does not meet the protective measures required by DIN 25422. Appropriate theft protection measures must be implemented at installation and storage locations.

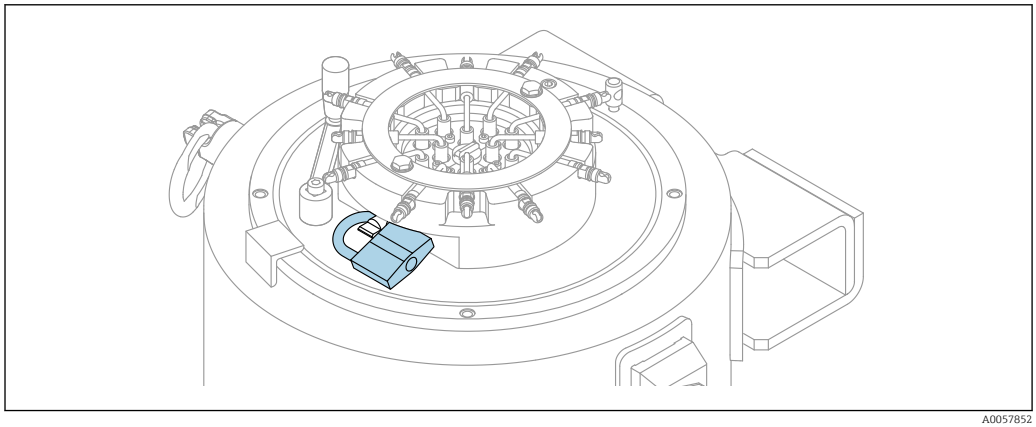

A0057852

12 *Theft protection lock*

## 3.9 Installation adapter

For the version with installation adapters:

Contact the Endress+Hauser sales organization

### 3.9.1 Installation adapter for protection pipe

The source container is mounted onto a protection pipe using an adapter.

The adapter has a funnel-shaped design.

The lower diameter corresponds to the diameter of the protection pipe in the process.

The adapter is screwed onto the flange of the source container.

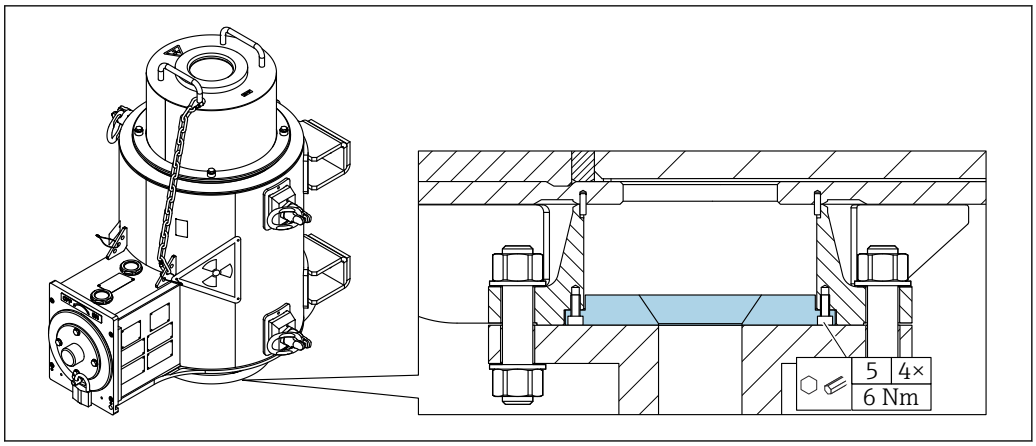


13 *Installation adapter for protection pipe*

### 3.9.2 Installation adapter for corrugated hoses

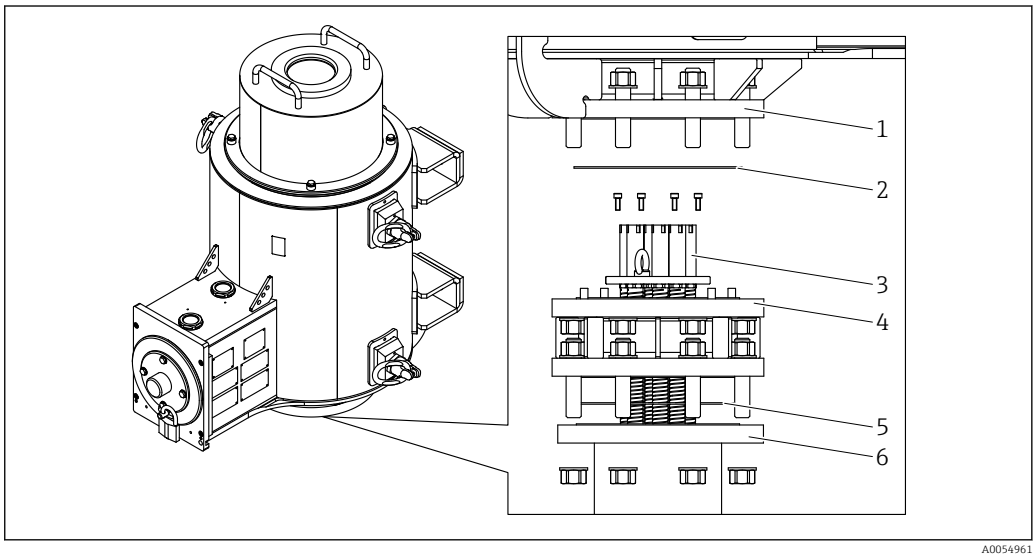


14 *Installation adapter for corrugated hoses*

1 *Connecting flange for source container*
2 *Seal*
3 *Corrugated hoses*
4 *Adapter for corrugated hoses*
5 *Seal*
6 *Process connection (provided by customer)*

Up to 12 corrugated hoses can be accommodated in the protection pipe.

## 3.10 Use as Type A packaging

For the definition of Type A packaging, see IAEA safety standards no. SSR-6 (Regulations for the safe transport of radioactive material; International Atomic Energy Agency; 2018 edition; IAEA safety standards series no. SSR-6 (Rev. 1)

The source container can also be used as a Type A transport and storage container in accordance with dangerous goods class 7. The application area is determined by the suitability certificate of the source container.

For further information, see section "Transport and storage -> Transport as Type A package".

# 4 Incoming acceptance and product identification

Incoming acceptance and product identification requires qualified installation and service personnel. See the "Requirements for personnel" section

**Dangerous goods class**
- The source container is a Type A transport and storage container in accordance with dangerous goods class 7.
- The source container can be packaged in an overpack.

## 4.1 Incoming acceptance and unpacking

### 4.1.1 Incoming acceptance

DANGER

**Noncompliance with national rules and regulations for the handling and storage of radiation sources.**
Legal consequences and dangers from errors in the handling of radiation sources.
▶ Follow the instructions of radiation safety officers.

Check the following during incoming acceptance:
- Is the overpack free from damage?
- Is the protective seal on the overpack intact?
- Do the order code on the delivery note and the packaging label (located on top of the overpack) match?
- **After unpacking:** Is the source container and its protective seal undamaged?
- **After unpacking:** Do the nameplate data correspond to the ordering information on the delivery note? The nameplate is explained in the "Product identification" section.

If one of the conditions is not satisfied, the radiation safety officer must be informed immediately. He will determine the further course of action.

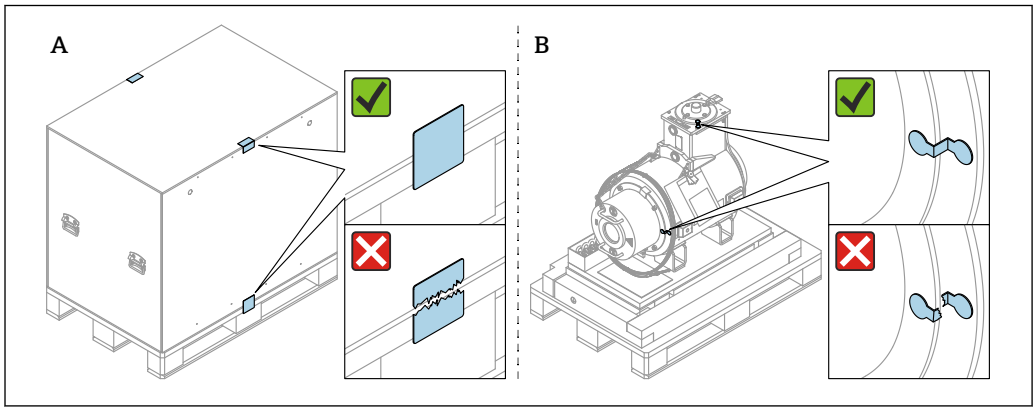


*15 Position of protection seal*

*A Protective seal on overpack*
*B Protection seal on source container*

**Scope of delivery**

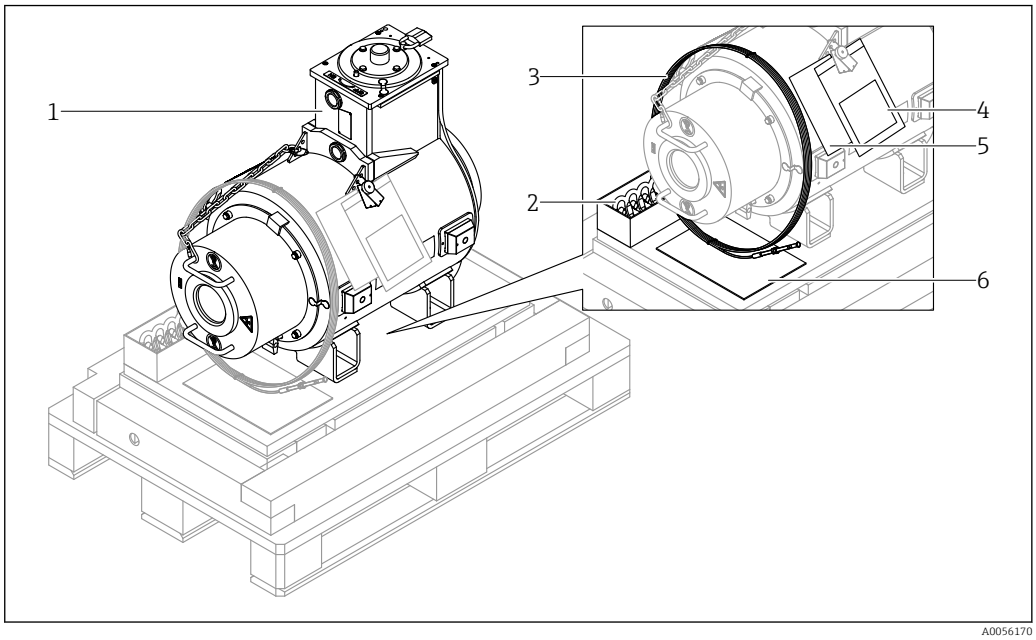


16 *Scope of delivery*

1 *Source container*
2 *Lifting points*
3 *Rope extensions*
4 *Document folder (acceptance certificate, final inspection report, optional: wipe test report)*
5 *Labeling of the package with "UN-3332 Radioactive material, Type A package, special form"*
6 *Operating Instructions*

## 4.1.2 Required tools

Torx screwdriver T20

## 4.1.3 Unpacking

**⚠ CAUTION**

**The heavy weight of the overpack could lead to handling errors when unpacking the source container.**

This could result in personal injury as a consequence of the crush hazard for hands and feet.

- ▶ Wear protective equipment.
- ▶ Use suitable lifting accessories. In conformity with EN 1492 or EN 13414, for example.

**⚠ CAUTION**

**Sharp edges on secondary packaging.**

This could result in personal injury in the form of cuts and abrasions.

- ▶ Wear protective equipment.

**⚠ CAUTION**

**Overpack not fitted to the crane correctly, leading to possible falling of the overpack.**

This could result in personal injury in the form of contusions and crushed body parts.

- ▶ Wear protective equipment.
- ▶ Observe the installation instructions.

**⚠ CAUTION**

**Risk of injury from the heavy weight of the overpack.**

This could result in back injuries during heavy lifting.

- At least two persons are required when using the handles on the overpack.
- Use of the lifting points in the overpack with suitable lifting accessories. A crane or rope winch, for example.

1 →

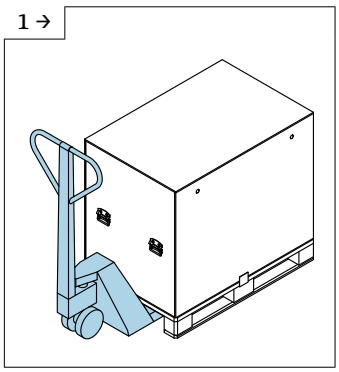

A0055002

- Use pallet trucks for transport.
- ℹ Observe the load capacity.

2 →

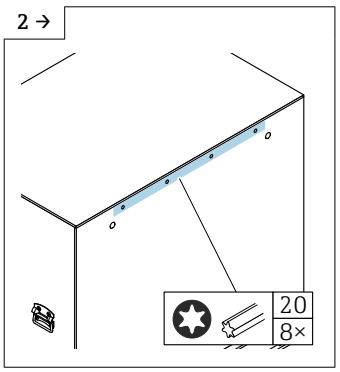


A0055897

- ⚠ CAUTION: SHARP EDGES! Observe the safety instructions at the start of the section.
- Unscrew the upper wood screws on the long sides from the wooden crate.

3 →

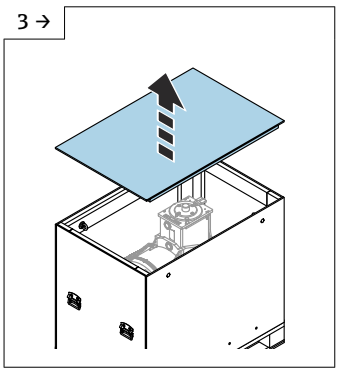

A0056177

- Remove the crate lid.

4 →

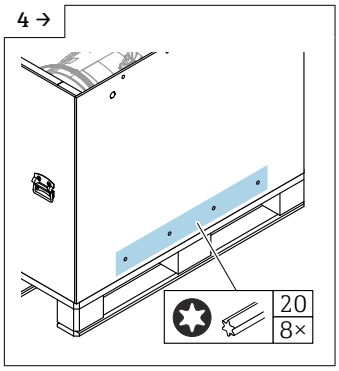


A0055898

- Unscrew the lower wood screws on the long sides from the wooden crate.

5 →

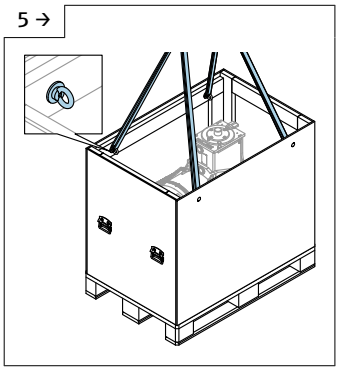

A0056178

- ⚠ CAUTION: RISK OF INJURY FROM HEAVY WEIGHT! Observe the safety instructions at the start of the section.
- ⚠ CAUTION: FALL HAZARD! Observe the safety instructions at the start of the section.
- Attach the transport slings to the lifting points on the wooden crate.

6 →

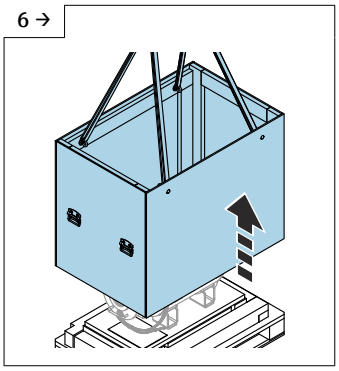

A0056179

- ⚠ CAUTION: RISK OF INJURY FROM HEAVY WEIGHT! Observe the safety instructions at the start of the section.
- ⚠ CAUTION: FALL HAZARD! Observe the safety instructions at the start of the section.
- Lift and remove the wooden crate with a crane.
- ℹ Crate weight: approx. 50 kg (110 lb)

7 →

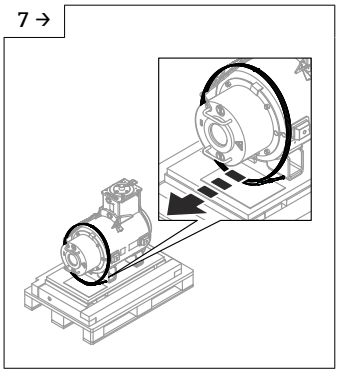

A0055899

- Remove the rope extensions and store them safely.
- ℹ Serial and item numbers are marked on the rope extensions to ensure reliable allocation.
- ℹ The printed length of the rope extension corresponds to the measurable length of the rope of the rope extension.

8

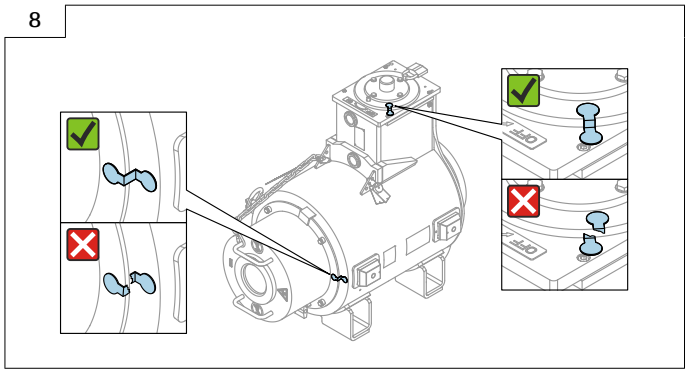

A0056171

- Check the protective seal on the source container
- The protective seal must not have been cut
- ℹ If the protective seal has been cut: Inform the radiation safety officer immediately. This person will then determine how to proceed.

## 4.2 Product identification

The measuring instrument can be identified in the following ways:
- Nameplate specifications
- Extended order code with breakdown of the measuring instrument features on the delivery note

- Enter the serial number of the nameplates into *Device Viewer*www.endress.com/deviceviewer.
  - ↳ All the information about the measuring instrument and the scope of the associated Technical Documentation are displayed.

- Enter the serial number from the nameplate into the *Endress+Hauser Operations app* or use the *Endress+Hauser Operations app* to scan the 2-D matrix code (QR code) on the nameplate
  - ↳ All the information about the measuring instrument and the scope of the associated Technical Documentation are displayed.

### 4.2.1 Nameplates

The nameplates are located on the nameplate holder.

## Device nameplate

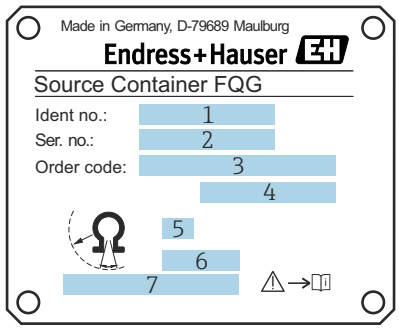


A0026746

17 *Labeling of the device nameplate*

1 *ID number of source container*
2 *Serial number of source container*
3 *Order code for source container as per product structure*
4 *Continuation of the order code of the source container as per the product structure*
5 *Beam exit angle*
6 *Not used*
7 *Local dose rate at a defined distance from the surface (when switched "OFF", outside the path of the beam)*

### *Radiation source nameplate*

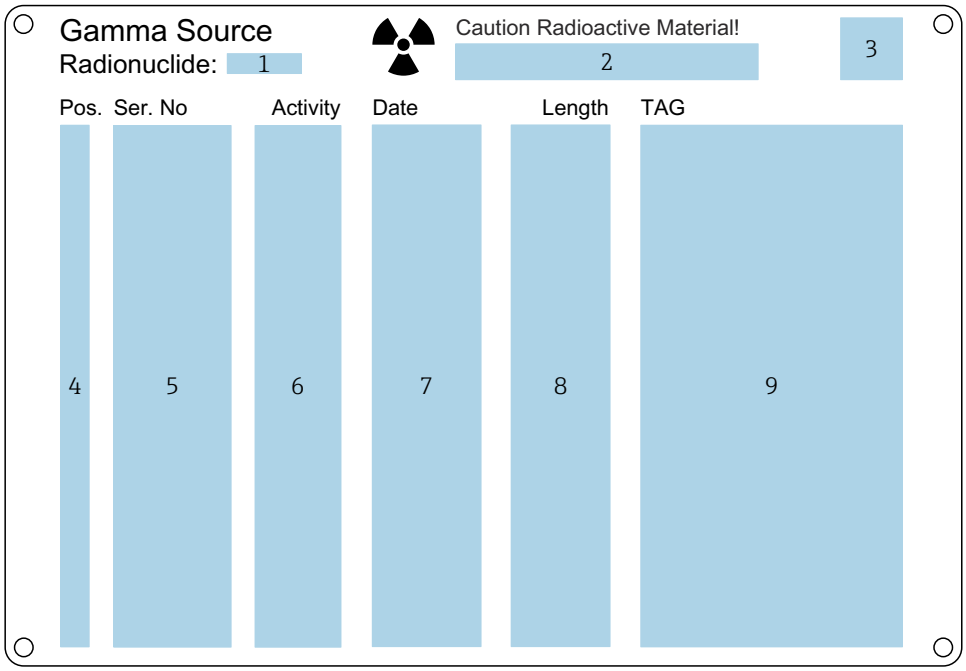


A0056109

18 *Labeling of the radiation source nameplate*

1 *Isotope designation*
2 *NOTICE: "Highly radioactive source", if required*
3 *2-D matrix code*
4 *Item number of radiation source*
5 *Serial number of the radiation source*
6 *Activity of the radiation source with unit (MBq or GBq)*
7 *Date of manufacture of radiation source*
8 *LN, nominal length of the rope extension*
9 *Device tag/tag number*

**Supplementary nameplate**

Supplementary nameplates are country-specific. The following nameplates are mandatory in the listed countries.

*Norway*

19 *Supplementary nameplate Norway*

*Sweden*

20 *Supplementary nameplate Sweden*

### 4.2.2 Manufacturer address

Endress+Hauser SE+Co. KG
Hauptstraße 1
79689 Maulburg, Germany

Place of manufacture: See nameplate.

# 5 Transport and storage

The source container can perform the following tasks:

- The source container acts as a Type A package, allowing approved radiation sources to be safely transported from the radiation source manufacturer to the measuring point. For a list of approved radiation sources, see the "Technical Information" documentation.
- The source container is suitable for storing radiation sources.
- The source container enables safe measuring point operation.
- At the end of the radiation source service life, the source container can again be used as a Type A package to return the radiation source to the manufacturer for disposal.

## 5.1 Transport as Type A package

Transport as a Type A package requires qualified transport personnel. See the "Requirements for personnel" section

### 5.1.1 General provisions and requirements

The source container can be used as a Type A package in accordance with the certificate of suitability of the source container.

The source container may be used only in good condition. In particular, the condition of the source container must be documented (see the "Maintenance and recurrent checks" section).

Suitability is voided in the event of improper use or any modification to the source container/shipping package not explicitly authorized by the manufacturer.

Suitability is voided in the event of any modification to the source container or shipping package not explicitly authorized by the manufacturer.

For the carriage of a shipment, measures for quality assurance and aging management of the packaging must be implemented. Aging management requires the regular checking and appropriate marking of the packaging, see ADR (Agreement concerning the International Carriage of Dangerous Good by Road).

- The source container may be used as a Type A package only with the approved radiation sources. Approved radiation sources are listed in the Technical Information for the source container. Maximum permissible activities could be further restricted by country-specific approvals.
- For transport, the source container must have a valid recurrent check record.
- Extraordinary incidents that occur in the handling of the source container must be reported to the manufacturer.

### 5.1.2 Overpack

The exact packaging instructions can be found in the special documentation SD00309F.

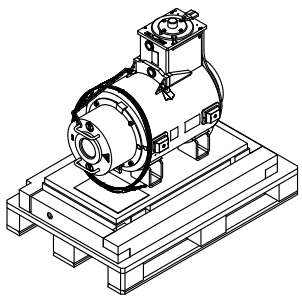

A0055531

*21 Device mounted on pallet*

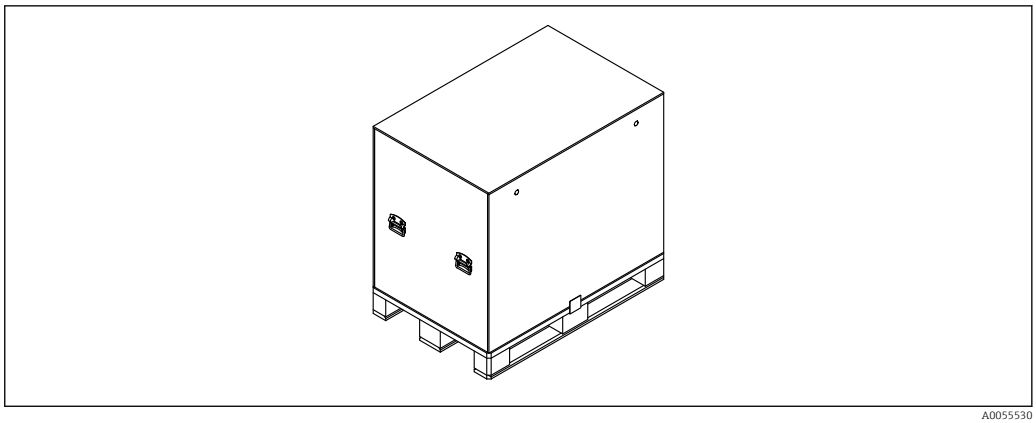


22 *Device in overpack*

### 5.1.3 Load securement

**DANGER**

**Displacement of the dangerous goods due to inadequate load securement with single straps.**

Damage to or loss of the dangerous goods. Risk of loss of control of the radiation source with the consequence of possible health hazards due to unshielded ionizing radiation.

- The use of single straps could lead to displacement of the dangerous goods. To secure the load, always use load restraint nets and, if necessary, implement further safety measures.

The load securement method must conform to the requirements of the respective traffic codes on the modes of transport used.

For road transport, load securement is defined by VDI 2700.

## 5.2 Dimensions, weights

### 5.2.1 Source container

**Dimensions**

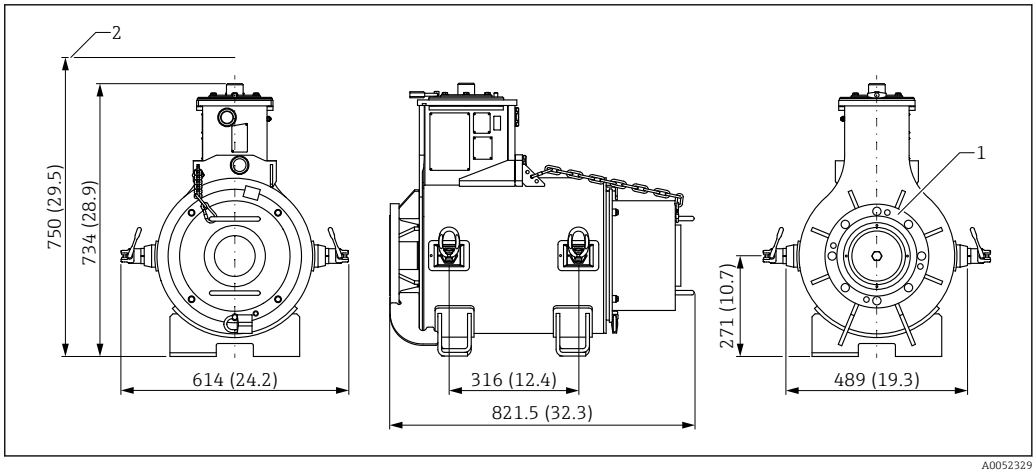


23 *Dimensions. Unit of measurement mm (in)*

1 *Flange: ANSI 6" 150 lbs*
2 *Overall length dimension with operating clearance for the crank*

**Weight**

- Source container FQG74 with pallet and overpack: 850 kg (1 874 lb)
- Source container FQG74: 802 kg (1 768 lb)
- Source holder: 0.28 kg (0.62 lb)
- Rope extension: 0.1 kg/m (0.067 lb/ft)

## 5.3 Handling

Handling requires qualified assembly and service personnel. See the "Requirements for personnel" section

**WARNING**

**Lifting points not fitted correctly, leading to possible falling of the container.**
This could result in personal injury or even death as a consequence of impact.
- ▶ Wear protective equipment.
- ▶ Observe the installation instructions of the manufacturer.
- ▶ Before each use, check the lifting points carefully in accordance with the operating instructions of the manufacturer.

**WARNING**

**Source container not fitted to the crane correctly, leading to possible falling of the source container.**
This could result in personal injury or even death as a consequence of impact.
- ▶ Wear protective equipment.
- ▶ Observe the installation instructions of the lifting points manufacturer.
- ▶ Lifting accessories must be suitably rated for the gross weight.

**WARNING**

**Lifting of the source container by the handles on the cover, leading to falling of the source container because the handles break off.**
This could result in personal injury or even death as a consequence of impact.
- ▶ Never use the handles on the cover to lift the source container.
- ▶ Wear protective equipment.
- ▶ Observe the installation instructions.

**WARNING**

**Swinging of the source container possible during mounting and dismounting.**
This could result in personal injury or even death.
- ▶ Wear protective equipment.
- ▶ Handle heavy loads correctly.

**WARNING**

**During removal or fitting of the transport lock: Possible short-term exposure to increased ionizing radiation (above controlled area).**
Ionizing radiation could increase the risk of cancer and the risk of genetic birth defects.
- ▶ Before the transport lock is fitted, check the position of the shutter using the windows. The shutter must be in the OFF position.
- ▶ Remove or fit the transport lock quickly. Observe the general instructions on radiation protection.

**CAUTION**

**Sharp edges on the source container.**
This could result in personal injury in the form of cuts and abrasions.
- ▶ Wear protective equipment.

**Additional handling instructions:**
- Follow safety instructions and observe transport conditions.
- Four lifting points are provided on the source container for transport and installation assistance.
- Only lift and transport the source container using the lifting points.
- The source container can be transported horizontally or vertically. See diagram.

**Manufacturer and type of lifting points:** RUD PP-B-1,5t-M16

Operating Instructions and technical data:

https://www.rud.com

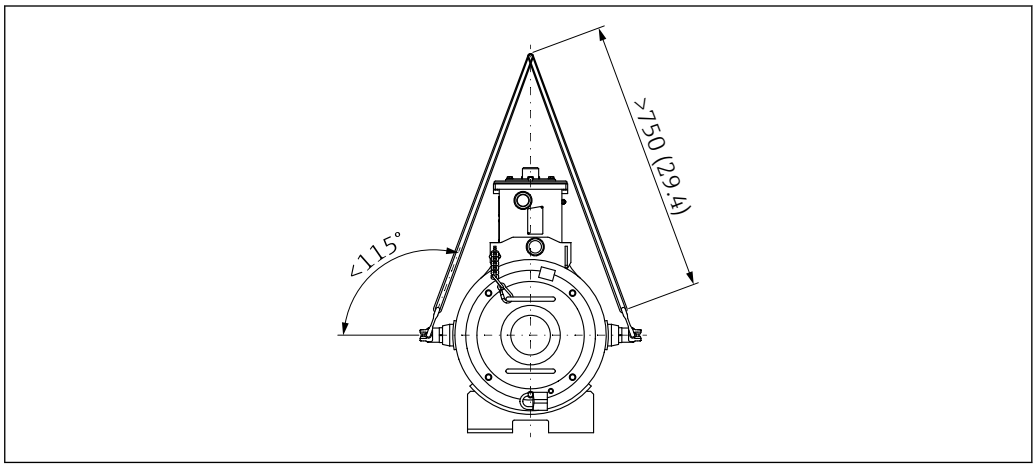


24 *Rope angle (< 115°) and rope length (> 1 500 mm (59 in)). Unit of measurement mm (in)*

The lifting points may only be loaded up to a maximum angle of 115°. The rope or transport sling must be at least 1 500 mm (59 in) long.

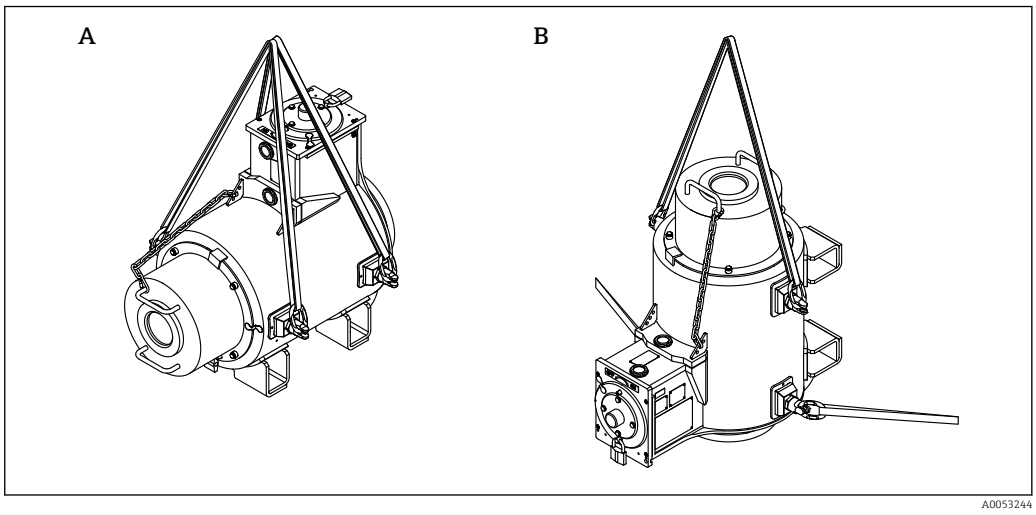


25 *Transport position*

*A Horizontal transport: using two transport slings, attached to four lifting points*
*B Vertical tranport: using one transport sling, attached to two lifting points Additionally, brace the sides to prevent the source container from swinging.*

### 5.3.1 Required tools

- Open-ended wrench AF 41
- Open-ended wrench AF 24
- Open-ended wrench AF 13
- Key for padlock

### 5.3.2 Preparation for transport to the installation location

1 →

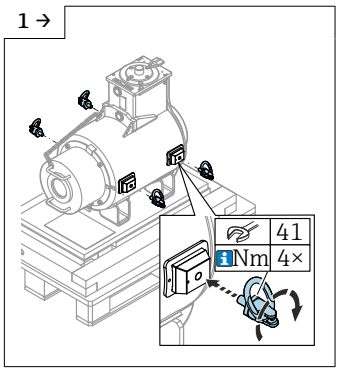


A0055653

- ⚠ WARNING: RISK OF INJURY FROM NONCOMPLIANCE WITH THE ASSEMBLY INSTRUCTIONS OF THE MANUFACTURER! Observe the safety instructions at the start of the section.
- Fit the lifting points
- ℹ Tightening torque: 30 Nm.
- ℹ Observe the specifications of the manufacturer (RUD PP-B-1,5t-M16). See section "Transport and storage -> Handling".

2 →

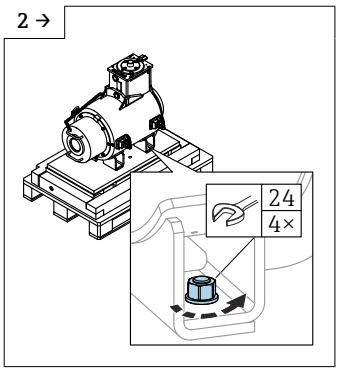


A0055654

- ⚠ CAUTION: SHARP EDGES! Observe the safety instructions at the start of the section.
- Remove the nuts on the transport feet.

3 →

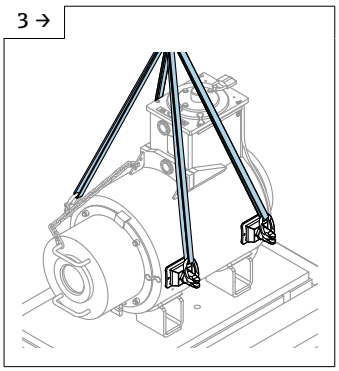

A0055667

- ⚠ WARNING: FALL HAZARD! Observe the safety instructions at the start of the section.
- Attach the transport slings.

4 →

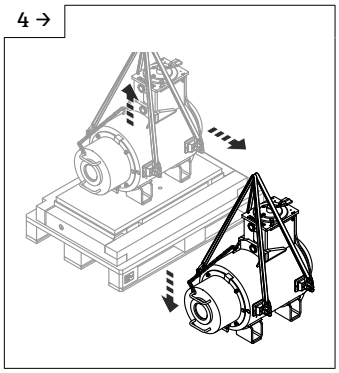

A0055672

- Lift the source container and place it on the floor.

5 →

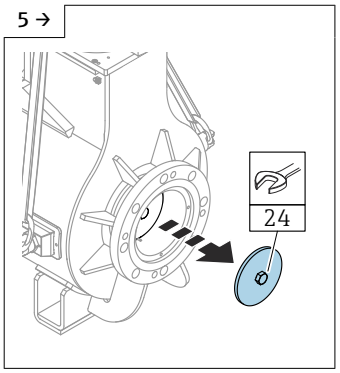


A0055518

- ⚠ WARNING: IONIZING RADIATION! INCREASED RADIATION POSSIBLE WHEN REMOVING THE TRANSPORT LOCK! Observe the safety instructions at the start of the section.
- Remove the transport lock.

6 →

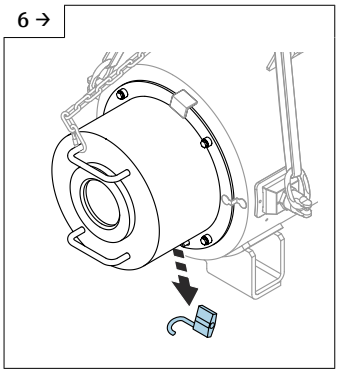

A0055669

- Remove the lock on the cover.

7 →

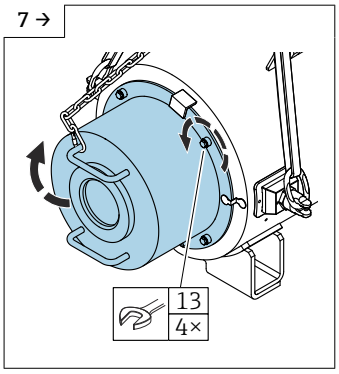


A0055670

- Remove the screws.
- Remove the cover.

8 →

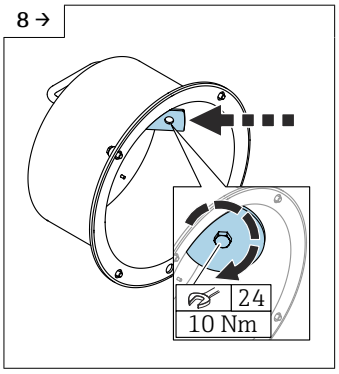


A0055519

- Move the transport lock under the cover to the parking position.

9 →

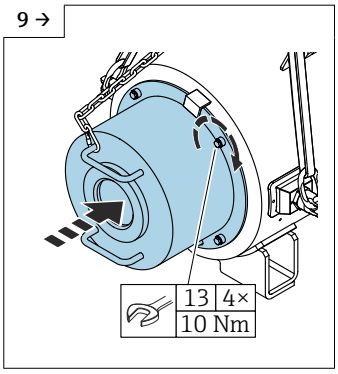


A0053253

- Fit the cover.
- Tighten the screws.
- The crank and transport lock must be in the parking position.

10

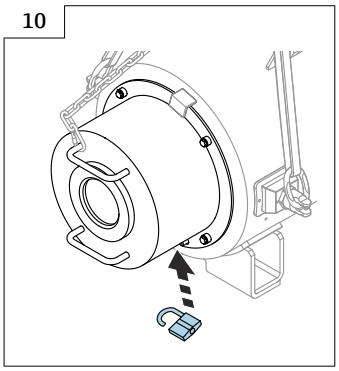

A0055671

- Attach the lock to the cover.
- Lay the rope extensions to the source container (over the cover).

## 5.4 Turning process

The turning process requires qualified installation and service personnel. See the "Requirements for personnel" section

**WARNING**

**Source container not fitted to the crane correctly, leading to possible falling of the source container.**

This could result in personal injury or even death as a consequence of impact.

- Wear protective equipment.
- Observe the installation instructions of the lifting points manufacturer.
- Lifting accessories must be suitably rated for the gross weight.

**WARNING**

**Forgotten to remove the transport lock before the turning process. Risk of the transport lock being removed on the suspended source container while the user is directly under the load.**

This could result in personal injury in the form of contusions and crushed body parts, and the source container cannot be put into operation.

- Wear protective equipment.
- Remove the transport lock before installation.

**WARNING**

**Uneven, inadequately load-bearing surface during the turning process, leading to possible tipping of the source container.**

This could result in serious, possibly irreversible, personal injury in the form of crushed body parts or fractures.

- Wear protective equipment.
- Make sure that the surface has sufficient load-bearing capacity.

**WARNING**

**Lifting of the source container by the handles on the cover, leading to falling of the source container because the handles break off.**

This could result in personal injury or even death as a consequence of impact.

- Never use the handles on the cover to lift the source container.
- Wear protective equipment.
- Observe the installation instructions.

**CAUTION**

**Swinging or tilting from horizontal to vertical position and vice versa during the turning process.**

This could result in personal injury in the form of contusions and crushed body parts.

- Wear protective equipment.
- Use squared timber as an aid to assist the turning process.
- Make sure that the surface does not allow the skids to slip.
- Use ropes to prevent the source container from swinging.

The shutter must be in the "OFF/AUS" position and must be secured with a lock.

### 5.4.1 Turning from the horizontal position to the vertical position

1 →

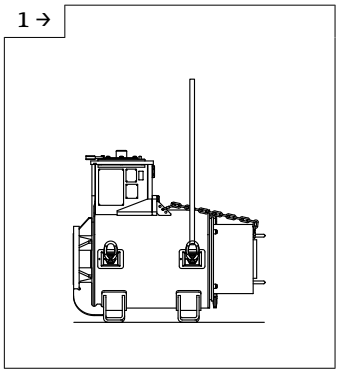

A0053246

- WARNING: FALL HAZARD! Observe the safety instructions at the start of the section.
- WARNING: RISK OF INJURY FROM NOT REMOVING THE TRANSPORT LOCK BEFORE ASSEMBLY! Observe the safety instructions at the start of the section.
- WARNING: RISK OF INJURY FROM USING THE HANDLES AS LIFTING POINTS! Observe the safety instructions at the start of the section.
- Attach the transport sling to the appropriate lifting points.

2 →

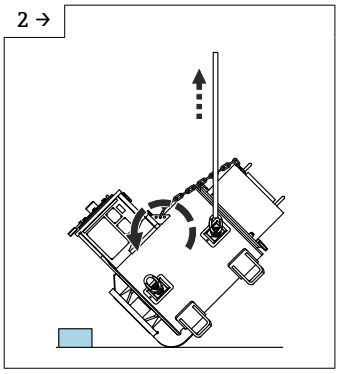

A0053247

- CAUTION: RISK OF INJURY FROM SWINGING OR SLIPPING OF SOURCE CONTAINER! Observe the safety instructions at the start of the section.
- Place squared timber underneath to prevent the shutter from striking the ground during the turning process.
- Lift the source container.
- In the process, the source container tilts over the skids into the vertical position.
- Observe distances.

3

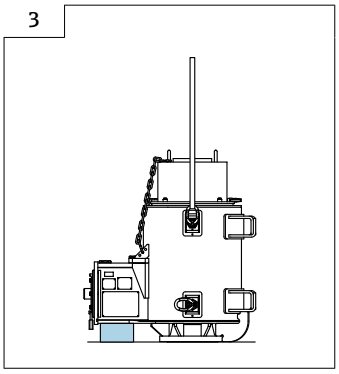

A0053248

- WARNING: RISK OF INJURY FROM UNEVEN AND INADEQUATELY LOAD-BEARING SURFACE! Observe the safety instructions at the start of the section.
- Vertical end position.
- Transport to the measuring point in this position.

### 5.4.2 Turning from the vertical position to the horizontal position

1 →

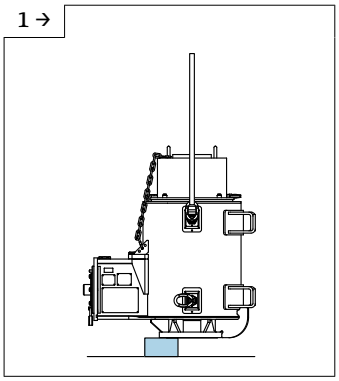

A0053249

- ⚠ WARNING: FALL HAZARD! Observe the safety instructions at the start of the section.
- Attach the transport sling to the appropriate lifting points and lift the source container.

2 →

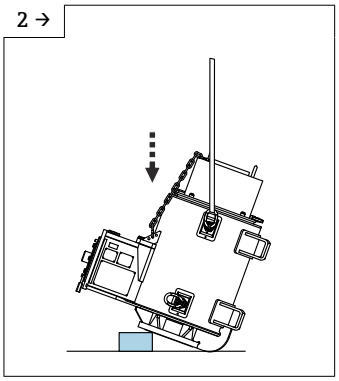

A0053250

- ⚠ WARNING: RISK OF INJURY FROM UNEVEN AND INADEQUATELY LOAD-BEARING SURFACE! Observe the safety instructions at the start of the section.
- With the source container raised, place squared timber under the connecting flange of the source container.

3 →

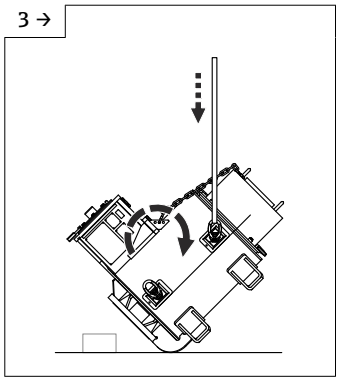

A0053251

- ⚠ CAUTION: RISK OF INJURY FROM SWINGING OR SLIPPING OF SOURCE CONTAINER! Observe the safety instructions at the start of the section.
- During lowering, the source container tilts over the skids into the horizontal position.

4

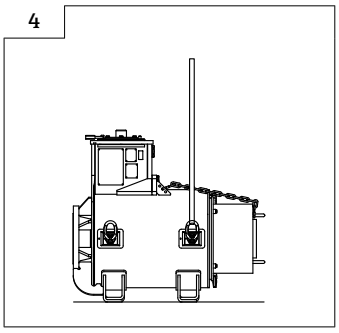

A0053246

- Horizontal end position.

## 5.5 Storage

Permitted storage temperature (excluding packaging): −52 to +120 °C (−61 to +248 °F)

- Observe the specifications for storage in section "Maintenance -> Recurrent checks".
- Implement anti-theft protection under consideration of national rules and requirements.

# 6 Installation

Mounting requires qualified installation and service personnel. See the "Requirements for personnel" section

**DANGER**

**When the shutter is switched to the ON position, the user will be exposed to unshielded ionizing radiation if the user moves underneath the flange or looks inside.**
Ionizing radiation could increase the risk of cancer and the risk of genetic birth defects. Depending on the dose received, ionizing radiation could lead to immediate physical harm, such as nausea, vomiting, hair loss, changes to blood count, serious tissue damage and even death.

- Always keep away from underneath the flange.
- Do not look into the exit opening under any circumstances.
- All precautionary measures for moving the radiation sources have been prepared (process adapter or process connections fitted and open to the top).
- Persons must be within a protected zone.
- When the source container is being switched on, personnel must be monitored with respect to their radiation exposure.

**WARNING**

**Corrosion or damage to the protection pipes!**
Leaking protection pipes can compromise the integrity of the radiation sources, increasing the risk of contamination.

- Use double-walled protection pipes whenever possible. Protection of the radiation sources via the protection pipe is the responsibility of the operator and must be ensured through appropriate measures, such as recurrent tests.
- The material used for the protection pipe must be suitable for the process conditions.
- Follow the measures in the "Emergency procedures" section.

**NOTICE**

**Errors in the planning and implementation of the internal diameters and bending radii of the protection pipes.**
Source holders could cause an obstruction in the protection pipe or could remain stuck in the protection pipe.

- The recommended distance between two consecutive radiation sources should be at least 400 mm (15.75 in). This restriction does not apply with a protection pipe internal diameter >38 mm (1.5 in).
- For 20 radiation sources, only straight protection pipes may be used (feature 25: option "A1")
- For 12 radiation sources, straight protection pipes can be used (feature 25: option "B1" or "B2")
- For 12 radiation sources, curved protection pipes may also be used (feature 25: option "B3"). Flexible source holders must be used for curved protection pipes.

## 6.1 Installation requirements

**NOTICE**

**In cases of doubt during mounting, hazardous situations could arise.**

- If there is any uncertainty, contact Endress+Hauser Service for support before work begins.

- Installation must only be carried out in accordance with local legislation or handling permits. All local conditions must be considered.
- Installation and removal are only permitted in the "AUS/OFF" switch positions. The switch position is secured by the cover of the shutter and lock.
- Use a load-bearing structure for installing the source container.
- Observe the weight and center of gravity of the source container: 780 kg (1 720 lb)
- Use lifting points and suitable lifting equipment.
- The device must be installed on the flange; other types of installation are not permitted.
- Install the source container vertically only.
- Optimum fire resistance is only guaranteed in the vertical position.

- Use in non-stationary plants is not permitted.
- Ensure that the process temperature is not transferred to the source container.
- Providing the protection pipe is the responsibility of the operator.

**Temperature range during installation or removal:**
−40 to +120 °C (−40 to +248 °F)

### 6.1.1 Checking the rope lengths before installation

**DANGER**

**Danger due to high radiation exposure**
Ionizing radiation could increase the risk of cancer and the risk of genetic birth defects.
- ▶ The dimensions specified in the figure must be strictly observed.
- ▶ When in lowered condition, the radiation sources must be located inside the product vessel.
- ▶ Compliance with the required protective measures.
- ▶ The dimensions of the danger zone must be determined and cordoned off accordingly in accordance with the applicable national requirements (e.g. StrlSchV).

The dimension "y" must be selected so that the radiation sources are inside the product vessel when lowered. y ≤ LN

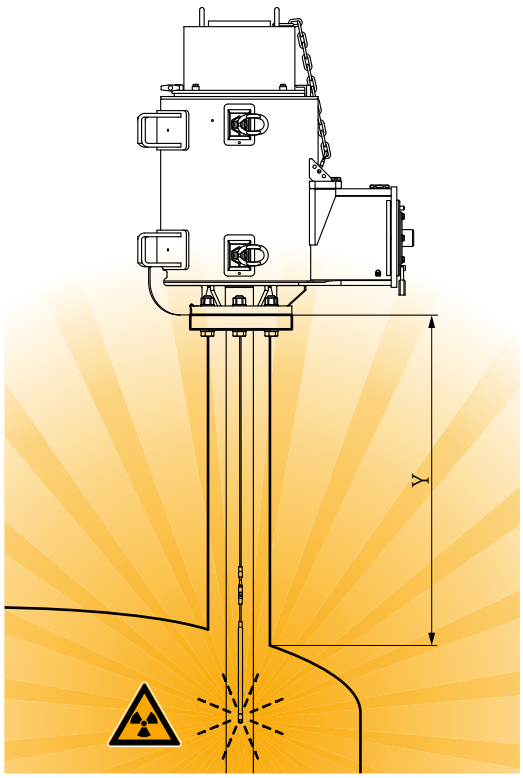


A0056396

*26 Installation dimensions*

*y: Length, from mounting flange to product vessel*
*LN: Variable rope length, depending on version*

## 6.2 Orientation

For the measurement, the source container is installed vertically on the product vessel via the connecting flange.

**DANGER**

**Risk of accident from heavy gross weight**

Incorrectly mounted source containers could lead to personal injuries and serious damage to physical items if they fall.

- Only vertical flange mounting is permitted.

### 6.2.1 Interface measurement

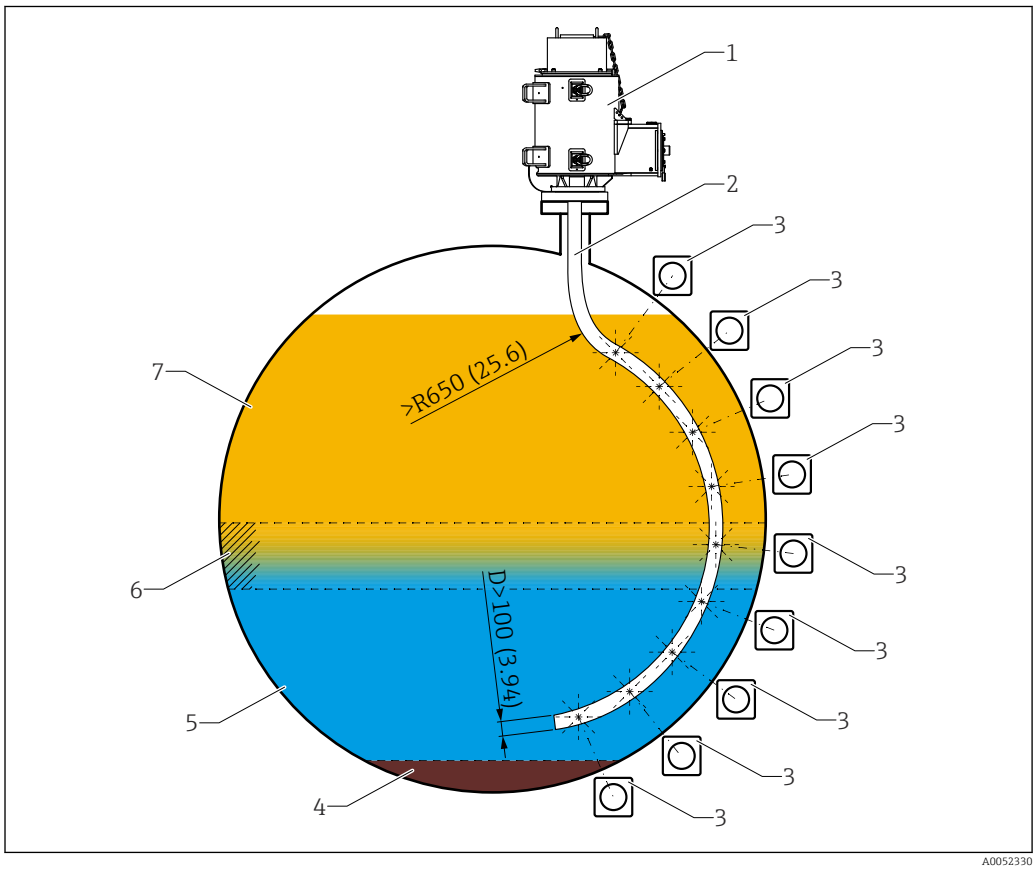


27 *Interface measurement*

1 *FQG74*
2 *Curved protection pipe*
3 *Gammapilot FMG50*
4 *Medium: Sand/sludge*
5 *Medium: Water*
6 *Medium: Emulsion*
7 *Medium: Oil*
R *Minimum radius: 650 mm (25.6 in)*
D *Minimum internal diameter of the protection pipe*

For the version with curved protection pipes:

Contact the Endress+Hauser sales organization

### 6.2.2 Level measurement

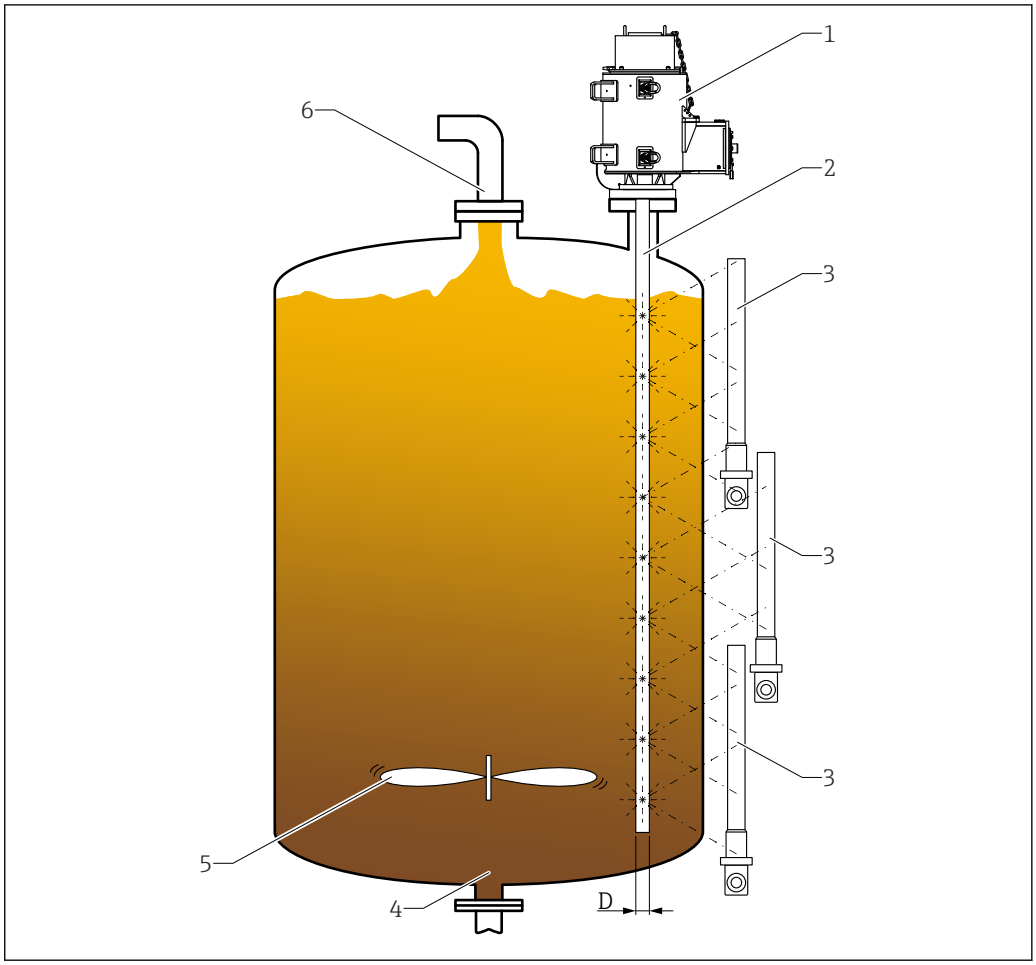


28 *Level measurement*

1 *FQG74*
2 *Straight protection pipe*
3 *Gammapilot FMG50*
4 *Medium*
5 *Agitator*
6 *Inlet*
D *Minimum internal diameter of the protection pipe*

Observe the notes for long measuring ranges in the FMG50 operating instructions ("Cascading operation" section)

BA01966F, operating instructions FMG50

### 6.2.3 Density measurement (multipoint)

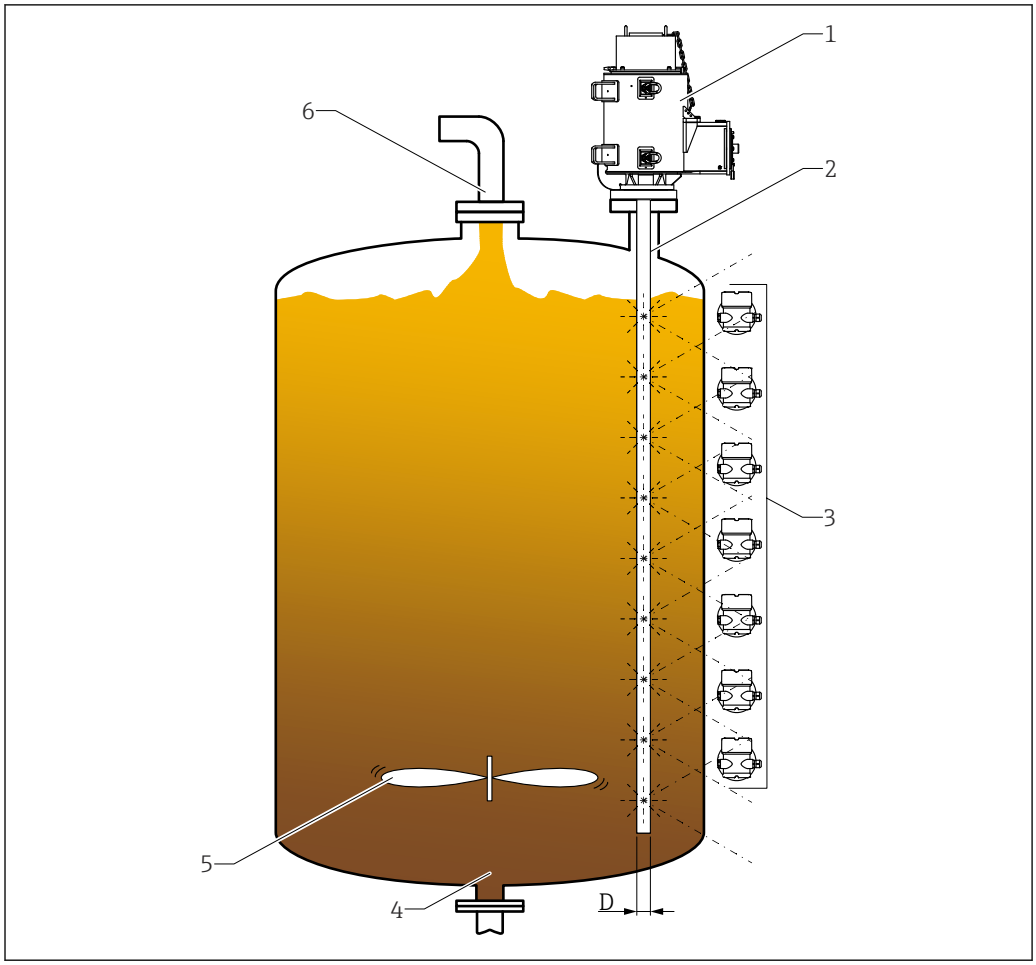


*29 Density measurement (multipoint)*

1 *FQG74*
2 *Straight protection pipe*
3 *Gammapilot FMG50 (horizontal mounting)*
4 *Medium*
5 *Agitator*
6 *Inlet*
D *Minimum internal diameter of the protection pipe*

## 6.3 Required tools

- Open-ended wrench SW30
- Allen screw SW5
- Phillips head screwdriver, size 1

## 6.4 Installing the source container

**WARNING**

**Source container not fitted to the crane correctly, leading to possible falling of the source container.**

This could result in personal injury or even death as a consequence of impact.

- ▶ Wear protective equipment.
- ▶ Observe the installation instructions of the lifting points manufacturer.
- ▶ Lifting accessories must be suitably rated for the gross weight.

**⚠ WARNING**

**Lifting of the source container by the handles on the cover, leading to falling of the source container because the handles break off.**

This could result in personal injury or even death as a consequence of impact.

- ▶ Never use the handles on the cover to lift the source container.
- ▶ Wear protective equipment.
- ▶ Observe the installation instructions.

**⚠ WARNING**

**Swinging of the source container possible during mounting and dismounting.**

This could result in personal injury or even death.

- ▶ Wear protective equipment.
- ▶ Handle heavy loads correctly.

**⚠ WARNING**

**During mounting, a hand could become caught between the flange of the source container and the flange of the process connection.**

This could result in serious, possibly irreversible, personal injury in the form of crushed body parts or fractures.

- ▶ Wear protective equipment.
- ▶ Handle heavy loads correctly.

**⚠ WARNING**

**During installation, hands or other body parts may get caught between components!**

Severe, potentially irreversible injuries such as crushing or fractures may occur.

- ▶ Wear protective equipment.
- ▶ Handle heavy loads properly.

**⚠ WARNING**

**Unsuitable or missing screws or incorrect tightening torque when mounting the source container.**

Possible falling of the source container, leading to personal injury or even death as a consequence of impact.

- ▶ Observe the installation instructions.

**⚠ WARNING**

**Underestimating the weight of components may result in parts falling!**

This may cause severe or fatal injuries due to impact.

- ▶ Wear protective equipment.
- ▶ The area below and around the installation site must be kept clear during installation.

**⚠ WARNING**

**Electrostatic charge in the potentially explosive atmosphere if potential equalization not established.**

- ▶ The device must be integrated into the potential equalization system of the plant.

**⚠ CAUTION**

**Sharp edges on the source container.**

This could result in personal injury in the form of cuts and abrasions.

- ▶ Wear protective equipment.

### 6.4.1 Installation with straight protection pipe

1 →

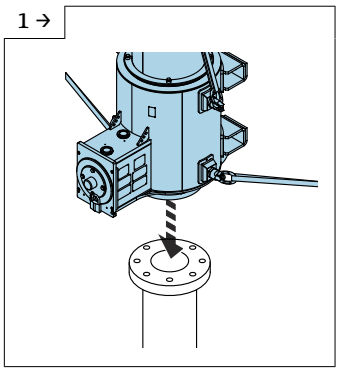

A0056430

- ⚠ WARNING: RISK OF INJURY DUE TO CRUSHING OR FRACTURES! Observe the safety instructions at the beginning of the section.
- Raise the source container to a vertical position and lower it to the connecting flange of the product vessel.

2 →

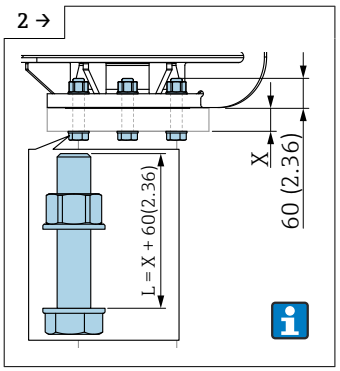


A0056431

- ℹ Determine screw length according to dimensions.
- ℹ Use screws and nuts (M20 - A4 property class 70).
- ℹ Screws, nuts and washers are not included.

3 →

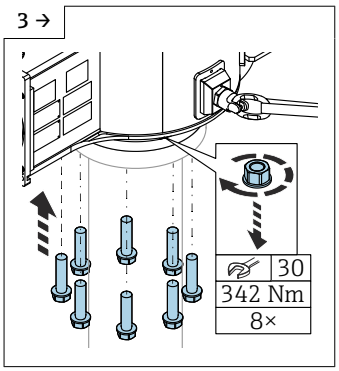


A0056432

- ⚠ WARNING: DANGER DUE TO UNSUITABLE, MISSING SCREWS OR INCORRECT TIGHTENING TORQUE! Observe the safety instructions at the beginning of the section.
- Screw the connecting flange of the source container to the connecting flange of the product vessel.
- Tighten flange bolts (M20 - A4 property class 70) and nuts.
- ℹ Tightening torque: 342 Nm

4 →

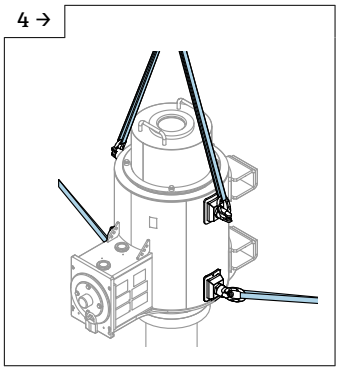

A0056433

- Remove the transport slings.

5

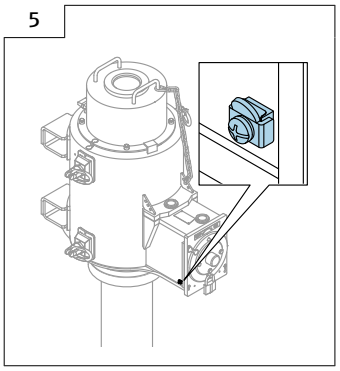

A0057651

- ⚠ WARNING: ELECTROSTATIC CHARGE! Observe the safety instructions at the beginning of the section.
- Connect the source container to the plant's potential equalization via die ground terminal.
- ℹ Potential equalization: max. 4 $mm^2$ (12 AWG)

### 6.4.2 Installation with curved protection pipe and corrugated hoses

**WARNING**

**Rope extensions can become entangled in the protection pipe if corrugated hoses are not used.**

This entanglement may prevent the rope extensions from being pulled up, leading to increased radiation exposure during the untangling process.

- Always use corrugated hoses for curved protection pipes.
- Always use flexible source holders for curved protection pipes.

1 →

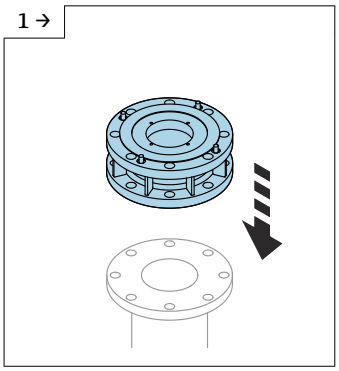

A0056444

- WARNING: FALLING PARTS! PAY ATTENTION TO THE WEIGHT! Observe the safety instructions at the beginning of the section.
- Position the process connection corrugated hoses on the connecting flange of the product vessel.
- Weight of process connection corrugated hoses: approx. 22 kg (48.5 lb)
- The process connection corrugated hoses have a connecting flange on both sides and are bolted on both sides by means of threaded bolts and nuts.

2 →

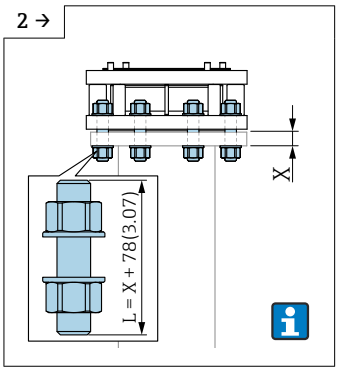


A0056445

- Determine the length of the threaded bolts according to the dimensions provided.
- Use threaded bolts and nuts (M20 - A4 property class 70).
- Threaded bolts, nuts and washers are not included.

3 →

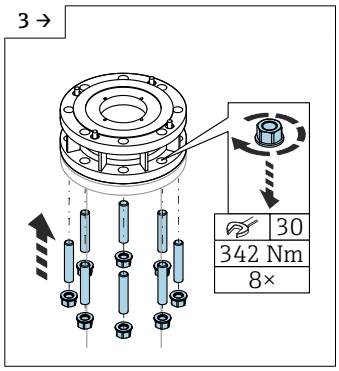


A0056446

- WARNING: DANGER DUE TO UNSUITABLE, MISSING SCREWS OR INCORRECT TIGHTENING TORQUE! Observe the safety instructions at the beginning of the section.
- Bolt the process connection corrugated hoses to the connecting flange of the product vessel.

4 →

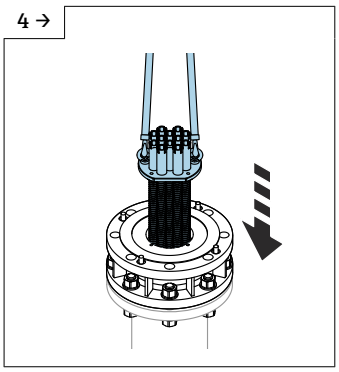

A0056447

- WARNING: RISK OF INJURY DUE TO CRUSHING OR FRACTURES! Observe the safety instructions at the beginning of the section.
- Insert the corrugated hose assembly into the curved protection pipe.

5 →

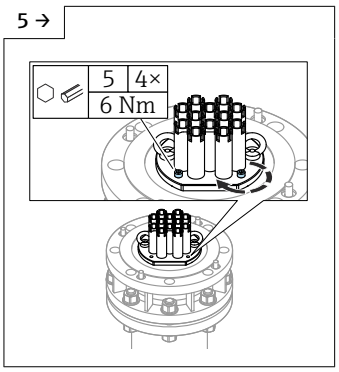


A0056448

- Bolt the corrugated hose assembly to the process connection corrugated hoses.

6 →

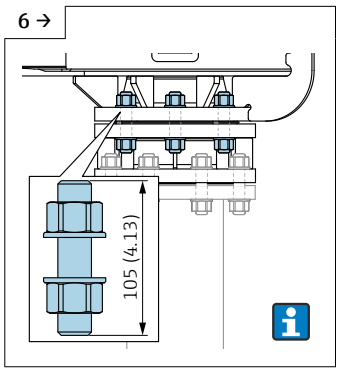


A0056449

- Length of threaded bolts: 105 mm (4.13 in)
- Use threaded bolts and nuts (M20 - A4 property class 70).
- Threaded bolts and nuts are not included.

7 →

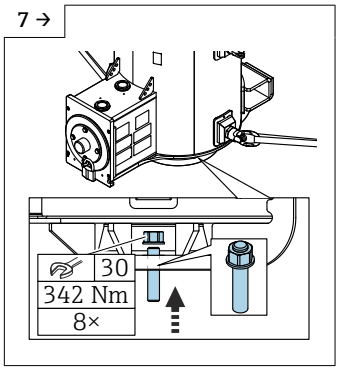


A0056450

- ⚠ WARNING: DANGER DUE TO UNSUITABLE, MISSING SCREWS OR INCORRECT TIGHTENING TORQUE! Observe the safety instructions at the beginning of the section.
- ℹ This step must be performed before lowering the source container.
- Lift source containers in vertical position.
- Insert threaded bolts with nuts and washers into the flange holes of the source container.

8 →

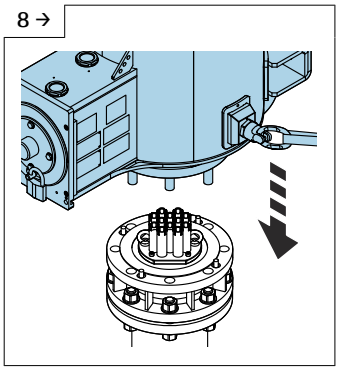

A0056451

- ⚠ WARNING: RISK OF INJURY DUE TO CRUSHING OR FRACTURES! Observe the safety instructions at the beginning of the section.
- Align the source container (alignable in 90° steps) and lower it onto the process connection corrugated hoses.
- ℹ The position of the process connection corrugated hoses is fixed by 4 pins (symmetrical in 90° steps) and therefore cannot be installed incorrectly.

9 →

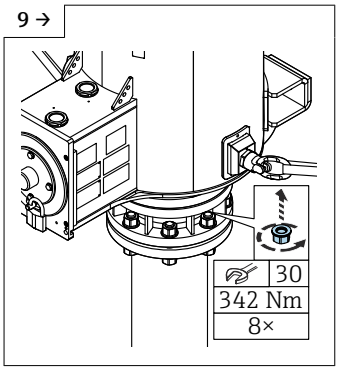


A0056452

- ⚠ WARNING: DANGER DUE TO INCORRECT TIGHTENING TORQUE! Observe the safety instructions at the beginning of the section.
- Bolt the connecting flange of the source container to the process connection corrugated hoses.

10 →

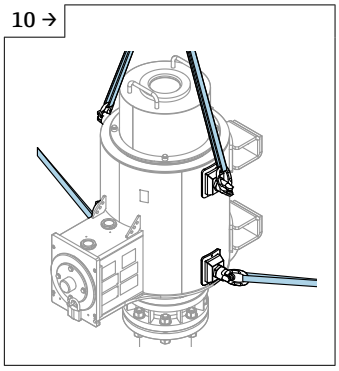

A0056453

- Remove the transport slings.

11

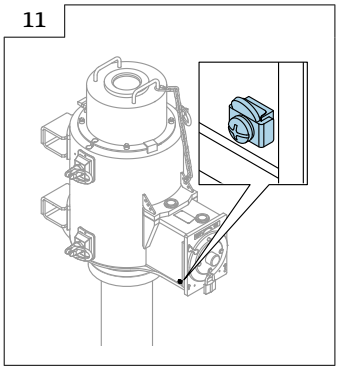

A0057651

- ⚠ WARNING: ELECTROSTATIC CHARGE! Observe the safety instructions at the beginning of the section.
- Connect the source container to the plant's potential equalization via die ground terminal.
- ℹ Potential equalization: max. 4 $mm^2$ (12 AWG)

## 6.5 Mounting check

- Is the device undamaged (visual check)?
- Are the measuring point identification and labeling correct (visual inspection)?
- Does the device comply with the measuring point specifications? For example:
  - Ambient temperature
  - Measuring height
  - Activity
- Are all the securing screws on the flange of the source container tightened securely?
- Are all the securing screws on the process adapter tightened securely?
- Has the source container been integrated into the potential equalization system of the plant?

## 6.6 Removing the source container from the measuring point

**⚠ WARNING**

**Source container not fitted to the crane correctly, leading to possible falling of the source container.**

This could result in personal injury or even death as a consequence of impact.

- ▶ Wear protective equipment.
- ▶ Observe the installation instructions of the lifting points manufacturer.
- ▶ Lifting accessories must be suitably rated for the gross weight.

**⚠ WARNING**

**Lifting of the source container by the handles on the cover, leading to falling of the source container because the handles break off.**

This could result in personal injury or even death as a consequence of impact.

- ▶ Never use the handles on the cover to lift the source container.
- ▶ Wear protective equipment.
- ▶ Observe the installation instructions.

**⚠ WARNING**

**Swinging of the source container possible during mounting and dismounting.**

This could result in personal injury or even death.

- ▶ Wear protective equipment.
- ▶ Handle heavy loads correctly.

**⚠ WARNING**

**Uneven, inadequately load-bearing surface during the turning process, leading to possible tipping of the source container.**

This could result in serious, possibly irreversible, personal injury in the form of crushed body parts or fractures.

- ▶ Wear protective equipment.
- ▶ Make sure that the surface has sufficient load-bearing capacity.

**⚠ CAUTION**

**Sharp edges on the source container.**

This could result in personal injury in the form of cuts and abrasions.

- ▶ Wear protective equipment.

**⚠ CAUTION**

**Swinging or tilting from horizontal to vertical position and vice versa during the turning process.**

This could result in personal injury in the form of contusions and crushed body parts.

- ▶ Wear protective equipment.
- ▶ Use squared timber as an aid to assist the turning process.
- ▶ Make sure that the surface does not allow the skids to slip.
- ▶ Use ropes to prevent the source container from swinging.

### 6.6.1 Removal with straight protection pipe

ℹ Before removing the source container, follow the steps in the "Switching off radiation" section.

1 →

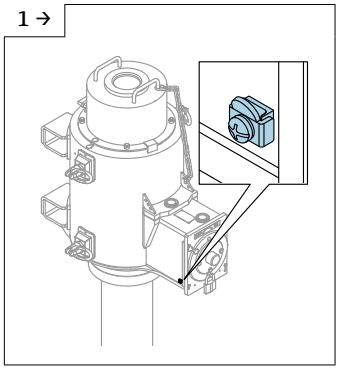

A0057651

- Loosen the ground terminal on the source container.
- Remove the ground terminal.

2 →

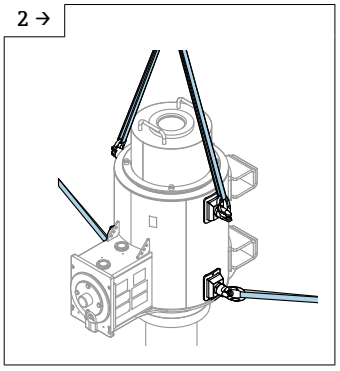

A0056433

- ⚠ WARNING: RISK OF SOURCE CONTAINER FALLING! Observe the safety instructions at the beginning of the section.
- Attach the transport slings.

3 →

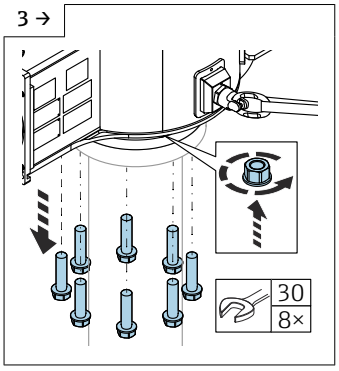


A0057652

- ⚠ CAUTION: SHARP EDGES! Observe the safety instructions at the beginning of the section.
- Loosen flange bolts and nuts.

4 →

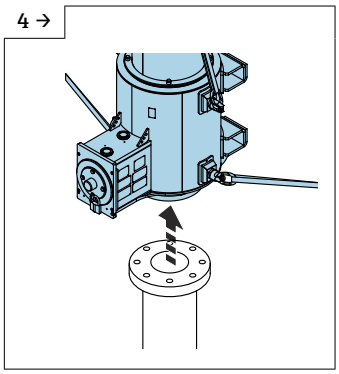

A0057653

- ⚠ WARNING: DANGER DUE TO SWAYING OF THE SOURCE CONTAINER! Observe the safety instructions at the beginning of the section.
- Lift the source container into a vertical position and remove it from the installation site.

5 →

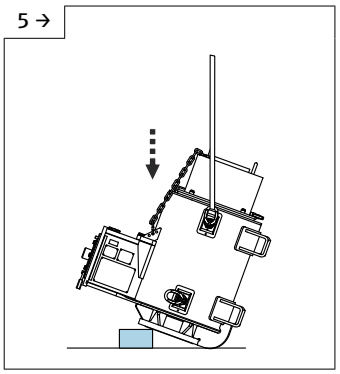

A0053250

- ⚠ WARNING: RISK OF INJURY DUE TO UNEVEN AND NON-LOAD BEARING BASE! Observe the safety instructions at the beginning of the section.
- With the source container raised, place squared timber under the connection flange of the source container.

6 →

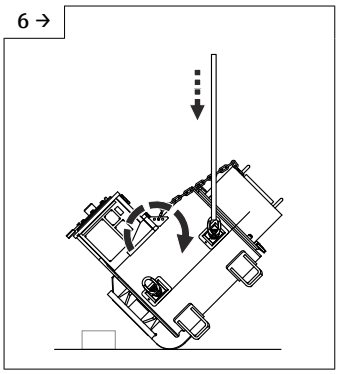

A0053251

- ⚠ CAUTION: RISK OF INJURY DUE TO SWAYING OR SLIPPING OF THE SOURCE CONTAINER! Observe the safety instructions at the beginning of the section.
- While being lowered, the source container will tilt over the skids into the horizontal position.

7 →

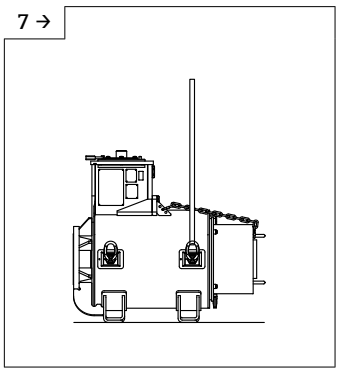

A0053246

- Horizontal position

8

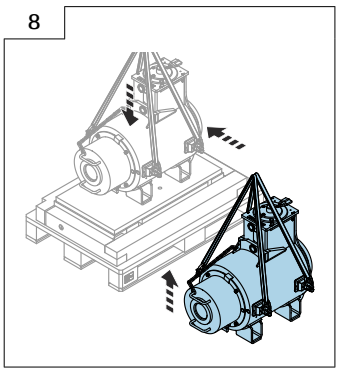

A0057654

- Lift the source container and place it on a transport pallet.

- Follow the storage requirements in the section "Maintenance -> Recurrent tests".
- Consider theft protection in compliance with national regulations.

### 6.6.2 Removal with curved protection pipe and corrugated hoses

Before removing the source container, follow the steps in the "Switching off radiation" section.

1 →

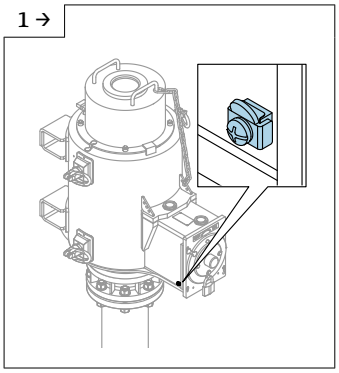

A0057797

- Loosen the ground terminal on the source container.
- Remove the ground terminal.

2 →

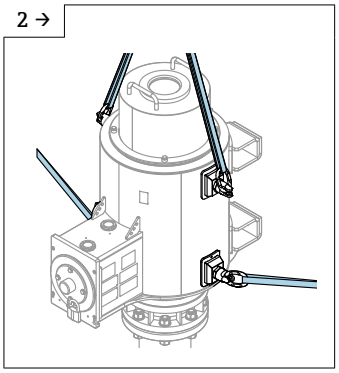

A0056453

- WARNING: RISK OF SOURCE CONTAINER FALLING! Observe the safety instructions at the beginning of the section.
- Attach the transport slings.

3 →

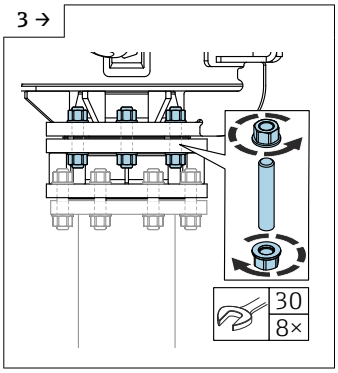


A0057798

- CAUTION: SHARP EDGES! Observe the safety instructions at the beginning of the section.
- Loosen and remove the flange screws and nuts.

4 →

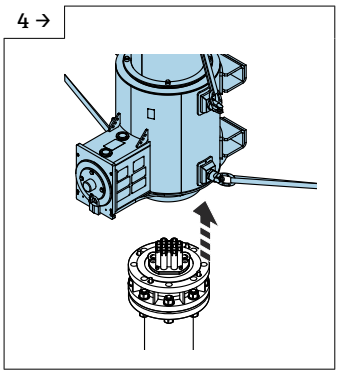

A0057799

- WARNING: DANGER DUE TO SWAYING OF THE SOURCE CONTAINER! Observe the safety instructions at the beginning of the section.
- Lift the source container into a vertical position and remove it from the installation site.

5 →

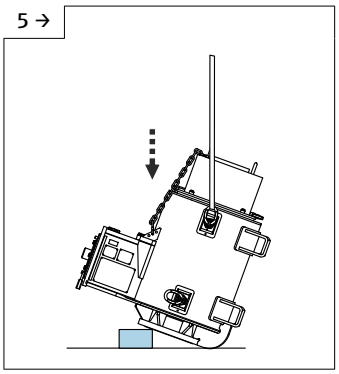

A0053250

- WARNING: RISK OF INJURY DUE TO UNEVEN AND NON-LOAD BEARING BASE! Observe the safety instructions at the beginning of the section.
- With the source container raised, place squared timber under the connection flange of the source container.

6 →

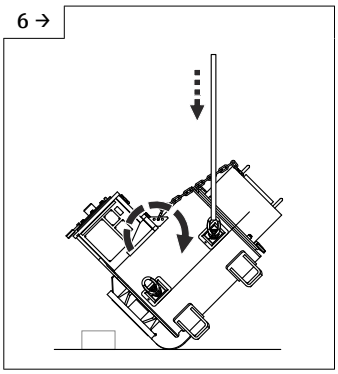

A0053251

- CAUTION: RISK OF INJURY DUE TO SWAYING OR SLIPPING OF THE SOURCE CONTAINER! Observe the safety instructions at the beginning of the section.
- While being lowered, the source container will tilt over the skids into the horizontal position.

7 →

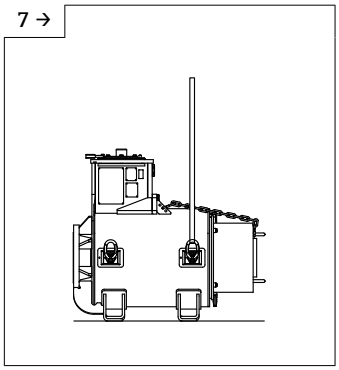

A0053246

▶ Horizontal position

8

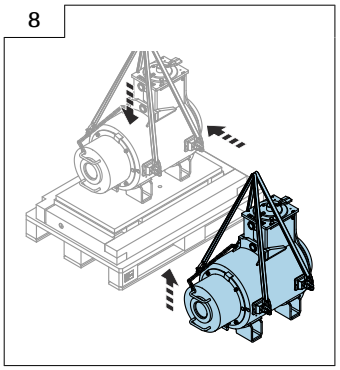

A0057654

▶ Lift the source container and place it on a transport pallet.

- Follow the storage requirements in the section "Maintenance -> Recurrent tests".
- Consider theft protection in compliance with national regulations.

# 7 Commissioning

For initial commissioning, qualification as installation and service personnel is required.

See the section "Requirements concerning personnel".

Commissioning requires qualified operating personnel.

See the section "Requirements concerning personnel".

## 7.1 Preliminaries

### 7.1.1 Tool required for general operation

During initial commissioning, measure the local dose rate; see the section "Measuring the local dose rate".

- Allen screw SW6
- Open-ended wrench SW10
- Open-ended wrench SW13
- Wire cutter for releasing the keys from the wire cable
- Key for padlock

### 7.1.2 Determining the position of the source magazines

The tables show the positions (P1-P20) on the source magazines (vertical column) in which the source holders (horizontal row) are located when the magazine is not completely filled.

Positions not occupied by source holders are loaded with dummy rods.

**Source magazine (20-position)**

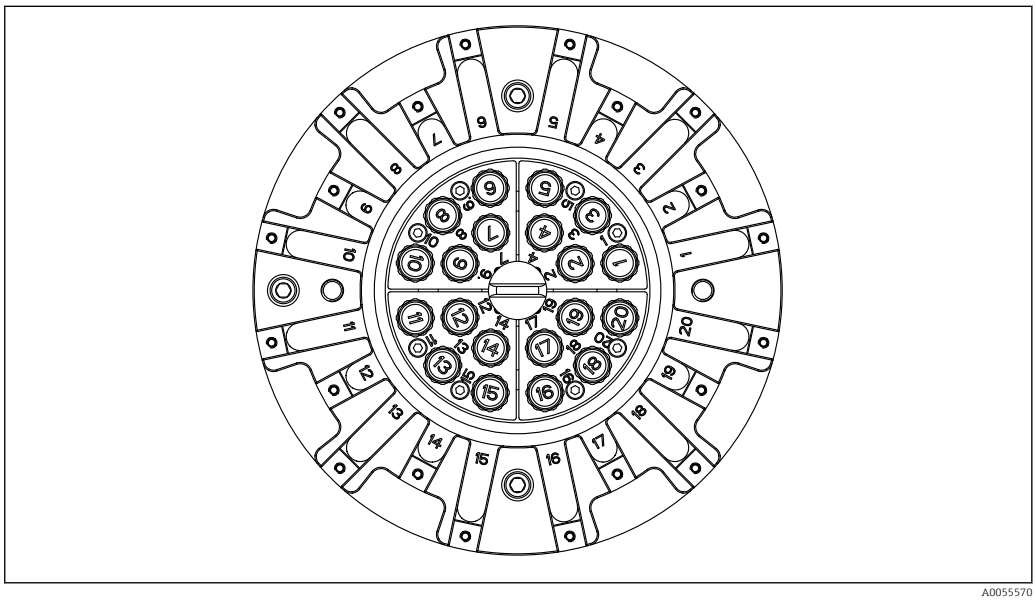


*30 Loading overview, source magazine (20-position)*

| | Number of radiation source (depending on characteristic 100) | | | | | | | | | | | | | | | | | | |
|---|---|---|---|---|---|---|---|---|---|---|---|---|---|---|---|---|---|---|---|
| | 2 | 3 | 4 | 5 | 6 | 7 | 8 | 9 | 10 | 11 | 12 | 13 | 14 | 15 | 16 | 17 | 18 | 19 | 20 |
| P1 | - | - | - | - | - | - | - | x | x | x | x | x | x | x | x | x | x | x | x |
| P2 | x | x | x | x | x | x | x | x | x | x | x | x | x | x | x | x | x | x | x |
| P3 | - | - | - | - | - | - | - | - | - | - | - | - | - | - | - | x | x | x | x |
| P4 | - | - | - | x | x | x | x | x | x | x | x | x | x | x | x | x | x | x | x |
| P5 | - | - | - | - | - | - | - | - | - | - | - | x | x | x | x | x | x | x | x |
| P6 | - | - | - | - | - | - | - | - | - | x | x | x | x | x | x | x | x | x | x |
| P7 | - | x | x | x | x | x | x | x | x | x | x | x | x | x | x | x | x | x | x |
| P8 | - | - | - | - | - | - | - | - | - | - | - | - | - | - | - | - | - | x | x |
| P9 | - | - | - | - | - | x | x | x | x | x | x | x | x | x | x | x | x | x | x |
| P10 | - | - | - | - | - | - | - | - | - | - | - | - | - | x | x | x | x | x | x |
| P11 | - | - | - | - | - | - | - | - | x | x | x | x | x | x | x | x | x | x | x |
| P12 | x | x | x | x | x | x | x | x | x | x | x | x | x | x | x | x | x | x | x |
| P13 | - | - | - | - | - | - | - | - | - | - | - | - | - | - | - | - | x | x | x |
| P14 | - | - | - | - | x | x | x | x | x | x | x | x | x | x | x | x | x | x | x |
| P15 | - | - | - | - | - | - | - | - | - | - | - | - | x | x | x | x | x | x | x |
| P16 | - | - | - | - | - | - | - | - | - | - | x | x | x | x | x | x | x | x | x |
| P17 | - | - | x | x | x | x | x | x | x | x | x | x | x | x | x | x | x | x | x |
| P18 | - | - | - | - | - | - | - | - | - | - | - | - | - | - | - | - | - | - | x |

| | | | | | | | | | | | | | | | | | | | |
|---|---|---|---|---|---|---|---|---|---|---|---|---|---|---|---|---|---|---|---|
| **P19** | - | - | - | - | - | - | x | x | x | x | x | x | x | x | x | x | x | x | x |
| **P20** | - | - | - | - | - | - | - | - | - | - | - | - | - | - | x | x | x | x | x |

P1-P20: Positions in source magazine

x: loaded with source holder

-: loaded with dummy rod

### Source magazine (12-position)

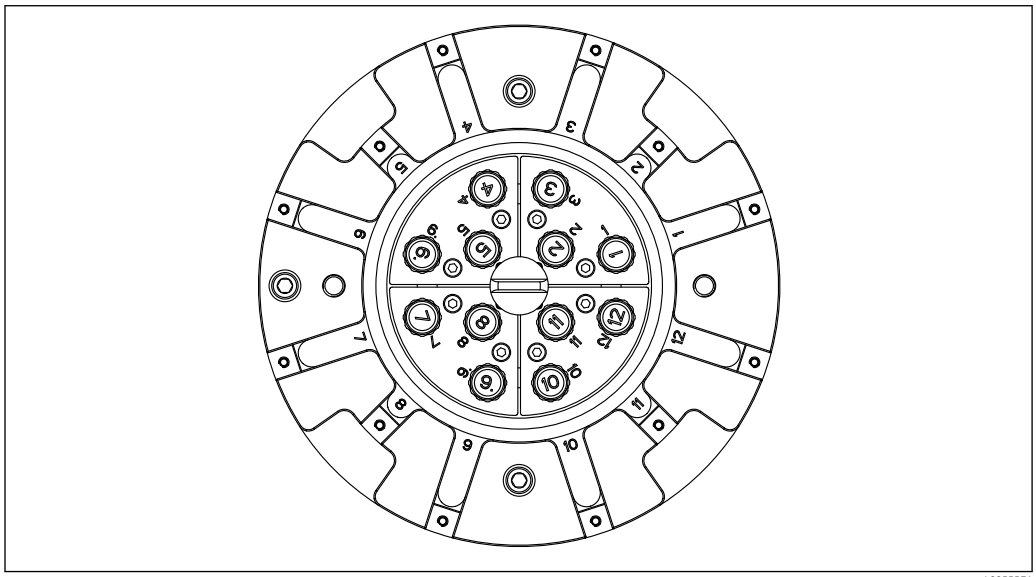

A0055571

*31 Loading overview, source magazine (12-position)*

| | Number of radiation source (depending on characteristic 100) | | | | | | | | | | |
|---|---|---|---|---|---|---|---|---|---|---|---|
| | **2** | **3** | **4** | **5** | **6** | **7** | **8** | **9** | **10** | **11** | **12** |
| **P1** | - | - | - | x | x | x | x | x | x | x | x |
| **P2** | x | x | x | x | x | x | x | x | x | x | x |
| **P3** | - | - | - | - | - | - | - | x | x | x | x |
| **P4** | - | - | - | - | - | x | x | x | x | x | x |
| **P5** | - | x | x | x | x | x | x | x | x | x | x |
| **P6** | - | - | - | - | - | - | - | - | - | x | x |
| **P7** | - | - | - | - | x | x | x | x | x | x | x |
| **P8** | x | x | x | x | x | x | x | x | x | x | x |
| **P9** | - | - | - | - | - | - | - | - | x | x | x |
| **P10** | - | - | - | - | - | - | x | x | x | x | x |
| **P11** | - | - | x | x | x | x | x | x | x | x | x |
| **P12** | - | - | - | - | - | - | - | - | - | - | x |

P1-P12: Positions in source magazine

x: loaded with source holder

-: loaded with dummy rod

## 7.2 Switch on radiation

**WARNING**

**When moving the extension ropes in ON position or OFF position, the user is exposed to ionizing radiation.**

Ionizing radiation can increase the risk of cancer and genetic defects in offspring.

- The radiation safety officer must instruct personnel on the procedure.
- Never stay underneath the flange.
- Extension ropes must be fully and promptly lowered when lowering.
- Extension ropes must be fully and promptly retracted into the source container when raised, and the radiation sources must be secured immediately in their parking position.

**WARNING**

**During removal or fitting of the transport lock: Possible short-term exposure to increased ionizing radiation (above controlled area).**

Ionizing radiation could increase the risk of cancer and the risk of genetic birth defects.

- Before the transport lock is fitted, check the position of the shutter using the windows. The shutter must be in the OFF position.
- Remove or fit the transport lock quickly. Observe the general instructions on radiation protection.

**WARNING**

**Dropping of crank, cover and ropes due to loosened screws.**

This could result in personal injury or even death as a consequence of impact.

- Do not loosen the safety chain from the cover.
- Wear protective equipment.

**CAUTION**

**Risk of injury from protruding attachment parts when the crank is operated.**

This could result in personal injury in the form of cuts and abrasions.

- Wear protective equipment.

**NOTICE**

**Locking sleeve of the rope extension not tightened.**

Increased risk of losing the source holders in the protection pipe.

- Check for correct installation of the locking sleeve.

1 →

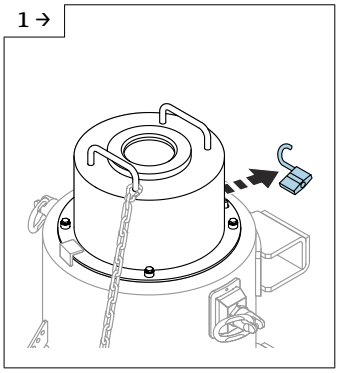

A0054693

- Remove the lock on the cover and store in a safe place.

2 →

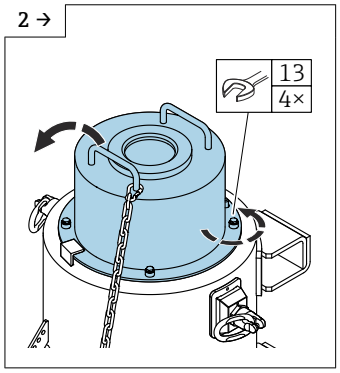


A0054694

- WARNING: FALLING PARTS! Observe the safety instructions at the beginning of the section.
- Release the screws on the cover.
- Remove the cover.

3 →

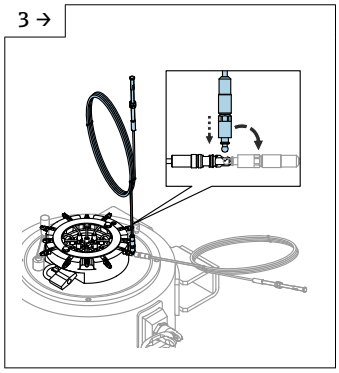

A0056336

- WARNING: RADIATION! Observe the safety instructions at the beginning of the section.
- Connect all rope extensions to the rope separators via the ball head.
- Pay attention to the item numbers.

4 →

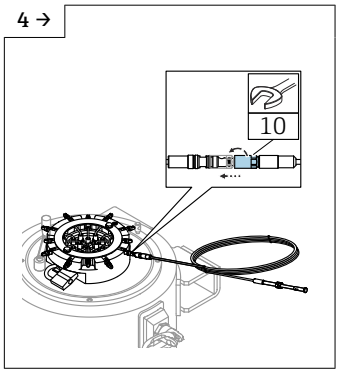


A0056338

- Tighten all locking sleeves of the rope extensions until they reach the stop.

5 →

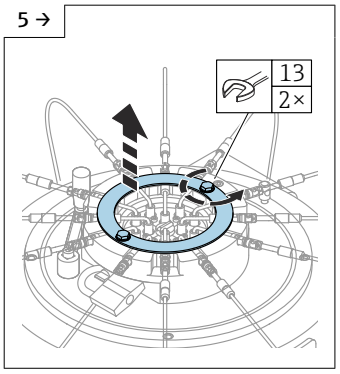


A0056339

- Loosen the screws of the retaining ring.
- Remove the retaining ring and store it safely.

6 →

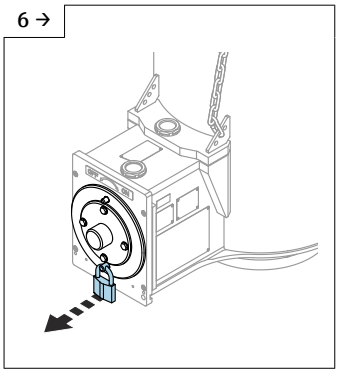

A0055560

- Remove the lock on the shutter cover and store it safely.

7 →

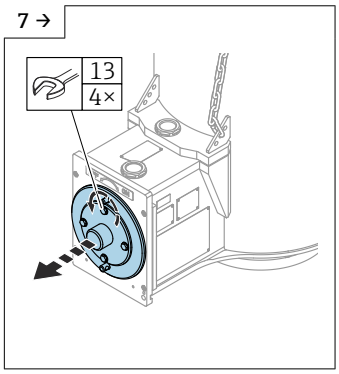


A0055561

- ⚠ WARNING: FALLING PARTS! Observe the safety instructions at the beginning of the section.
- Remove the shutter cover and store it safely.

8 →

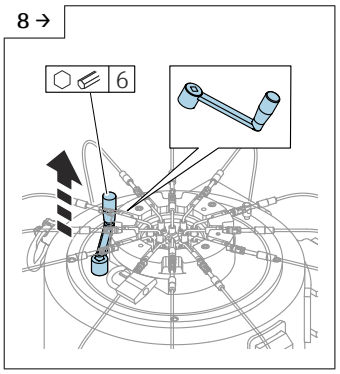


A0056340

- Remove the crank from the parking position.

9 →

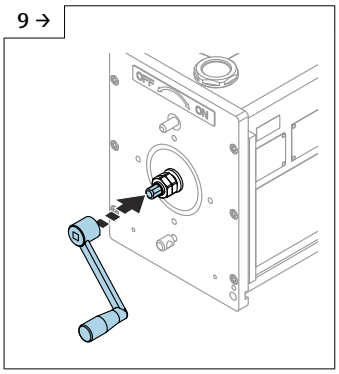

A0055566

- Place the crank on the square spindle holder.

10 →

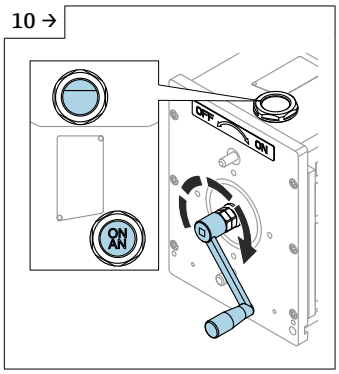


A0055567

- ⚠ CAUTION: RISK OF INJURY WHEN OPERATING THE CRANK! Observe the safety instructions at the beginning of the section.
- Using the crank, move the shutter to the "ON/AN" position.
- ℹ Alternatively, you can move the shutter with a 12 mm open-ended wrench.

11 →

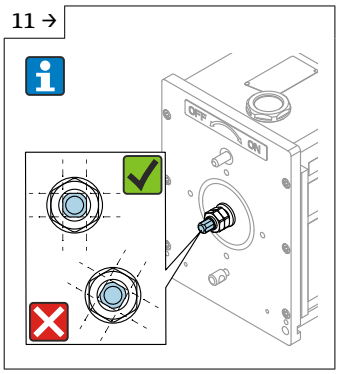


A0055572

- ℹ Align the surfaces of the square spindle holder in the vertical and horizontal position.

12 →

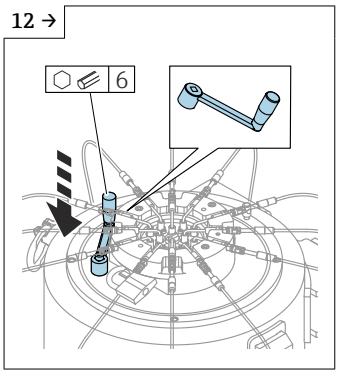


A0056355

- Return the crank to the parking position.

13 →

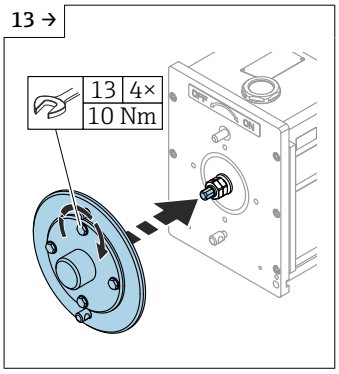


A0055592

- Attach the shutter cover and tighten the screws.

14 →

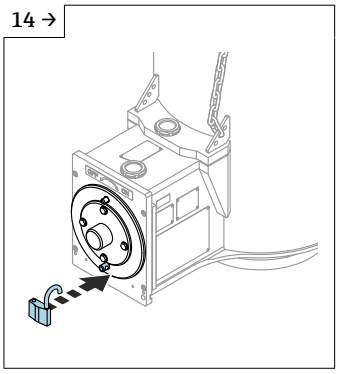

A0055573

- Attach the lock to the shutter cover.

15 →

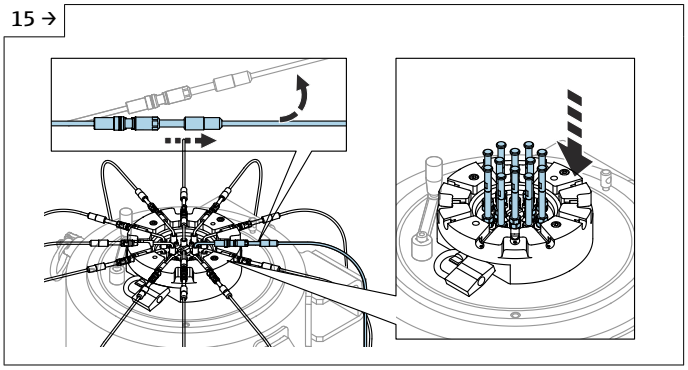

A0056376

- ⚠ WARNING: RADIATION WHEN MOVING THE ROPES! Observe the safety instructions at the beginning of the section.
- ℹ Starting with the longest rope and continuing to the shortest rope, perform the following steps for each:
- Unhook the rope separator from the fixing ring.
- Lower the radiation source.
- Repeat these steps with all rope separators/radiation sources.

16 →

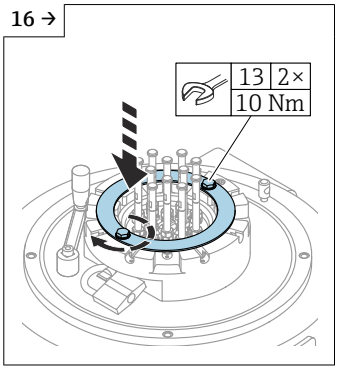


A0056377

- Refit the retaining ring. Tighten the screws of the retaining ring.

17 →

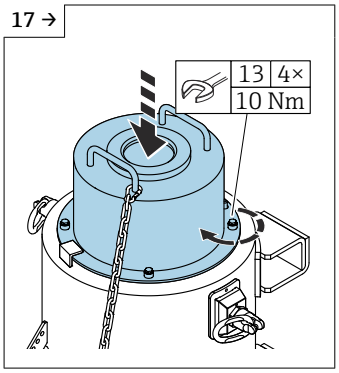


A0055668

- Fit the cover.
- Tighten the screws.
- ℹ The crank and transportation lock must be in the parking position.

18

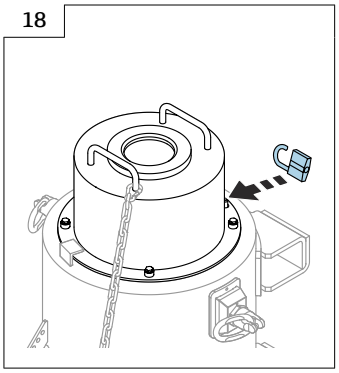

A0053254

- Attach the lock to the cover.

## 7.3 Measuring the local dose rate

- Once mounting is complete, the local dose rate in the vicinity of the source container and the detector must be measured.
- Depending on the installation, ionizing radiation can also occur outside the actual beam exit channel as a consequence of scattering.
- Shield with additional lead or steel sheets.
- Cordon off and mark all controlled and exclusion areas.

### 7.3.1 What to do if the product vessel is empty

- If the product vessel is empty, after proper installation, measure the controlled area around the product vessel and, if necessary, cordon off and mark this area accordingly.
- If there any access points to the internal space of the product vessel, seal them off and mark them with a "Radioactive" warning sign.
- Only the responsible radiation safety officer may allow access after safety measures have been checked with the source container switched off.
- For work on the product vessel, switch off the radiation and, if necessary, implement additional shielding measures.

## 7.4 Switch off radiation

**⚠ WARNING**

**When moving the extension ropes in ON position or OFF position, the user is exposed to ionizing radiation.**

Ionizing radiation can increase the risk of cancer and genetic defects in offspring.

- ▶ The radiation safety officer must instruct personnel on the procedure.
- ▶ Never stay underneath the flange.
- ▶ Extension ropes must be fully and promptly lowered when lowering.
- ▶ Extension ropes must be fully and promptly retracted into the source container when raised, and the radiation sources must be secured immediately in their parking position.

**⚠ WARNING**

**During removal or fitting of the transport lock: Possible short-term exposure to increased ionizing radiation (above controlled area).**

Ionizing radiation could increase the risk of cancer and the risk of genetic birth defects.

- ▶ Before the transport lock is fitted, check the position of the shutter using the windows. The shutter must be in the OFF position.
- ▶ Remove or fit the transport lock quickly. Observe the general instructions on radiation protection.

**⚠ WARNING**

**Dropping of crank, cover and ropes due to loosened screws.**

This could result in personal injury or even death as a consequence of impact.

- ▶ Do not loosen the safety chain from the cover.
- ▶ Wear protective equipment.

**⚠ WARNING**

**Hot source magazine and hot rope extensions due to process heat transfer.**
This could result in burns to hands.
- ▶ Wear protective equipment.
- ▶ Define organizational measures for protection from hot parts. Warn equipment operators of the danger posed by hot parts on the source container, e.g. in the form of notices and training.
- ▶ The plant operator must ensure that the radiation sources can be safely set to the OFF position in an emergency. A risk of injury from hot parts on the source container must be taken into consideration.
- ▶ If possible, allow the process to cool down before the ropes are retracted.

**⚠ CAUTION**

**Risk of injury from protruding attachment parts when the crank is operated.**
This could result in personal injury in the form of cuts and abrasions.
- ▶ Wear protective equipment.

**⚠ CAUTION**

**When the radiation sources are being raised, there is a risk of injury from rope defects on the rope extensions (e.g. due to frayed wire).**
This could result in personal injury in the form of cuts and abrasions.
- ▶ Wear protective equipment.

**NOTICE**

**Locking sleeve of the rope extension not tightened.**
Increased risk of losing the source holders in the protection pipe.
- ▶ Check for correct installation of the locking sleeve.

1 →

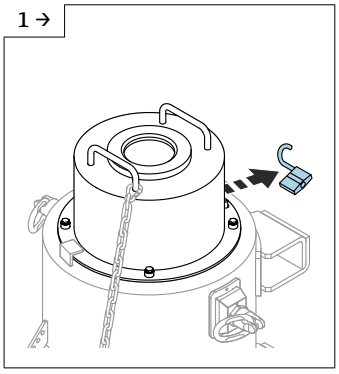

A0054693

- ▶ Remove the lock on the cover and store in a safe place.

2 →

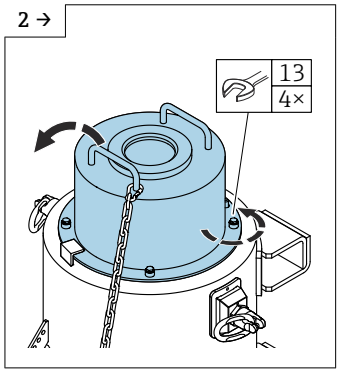


A0054694

- ▶ ⚠ WARNING: FALLING PARTS! Observe the safety instructions at the beginning of the section.
- ▶ Release the screws on the cover.
- ▶ Remove the cover.

3 →

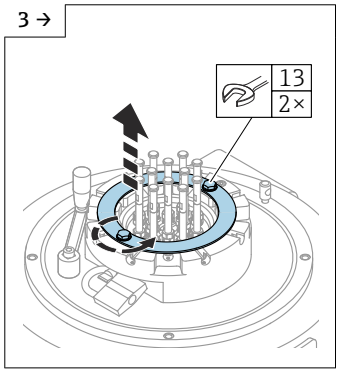


A0056378

- ▶ Loosen the screws of the retaining ring.
- ▶ Remove the retaining ring and store it safely.

4 →

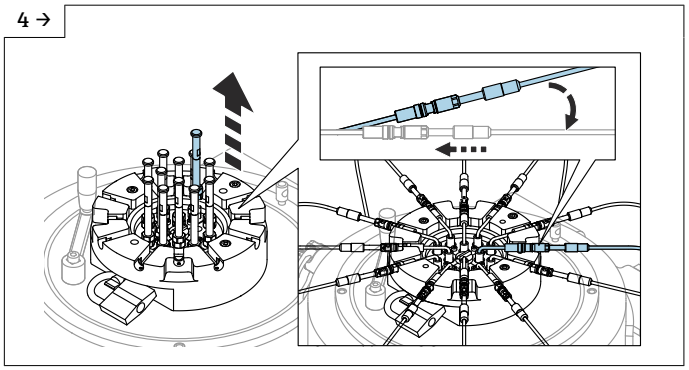

A0056390

- ⚠ DANGER: RADIATION WHEN MOVING THE ROPES! Observe the safety instructions at the beginning of the section.
- ⚠ WARNING: RISK OF BURNS DUE TO HOT COMPONENTS! WEAR PROTECTIVE EQUIPMENT! Observe the safety instructions at the beginning of the section.
- ⚠ CAUTION: RISK OF INJURY DUE TO DAMAGED ROPES! WEAR PROTECTIVE EQUIPMENT! Observe the safety instructions at the beginning of the section.
- Pull up the rope extensions.
- Start with the shortest rope. Pull up the remaining ropes one after the other, pulling up the longest rope last.
- Attach the rope separators to the fixing ring.

5 →

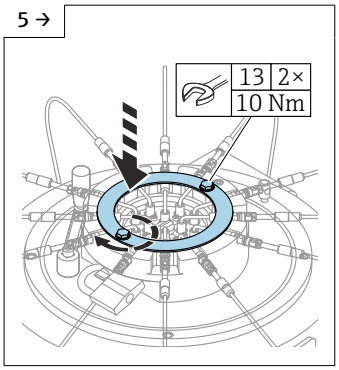


A0056379

- Refit the retaining ring.
- Tighten the screws of the retaining ring.

6 →

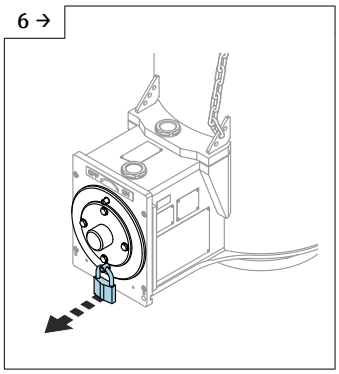

A0055560

- Remove the lock on the shutter cover and store it safely.

7 →

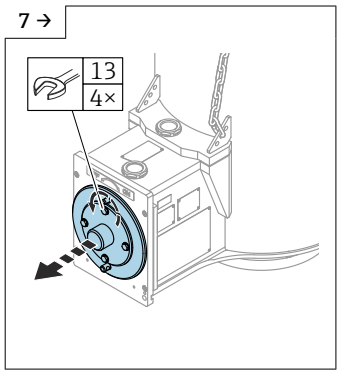


A0055561

- Remove the shutter cover and store it safely.

8 →

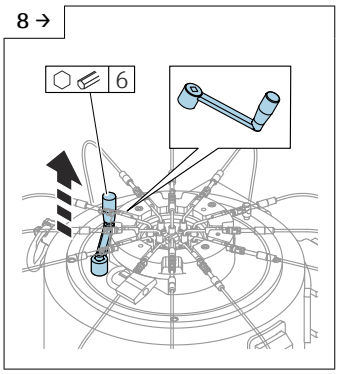


A0056340

- Remove the crank from the parking position.

9 →

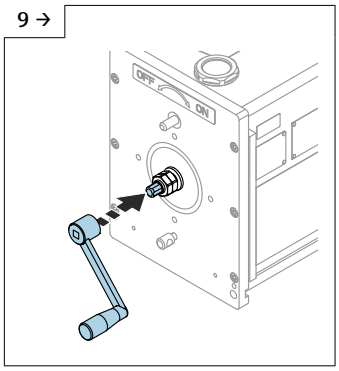


A0055566

- Place the crank on the square spindle holder.

10 →

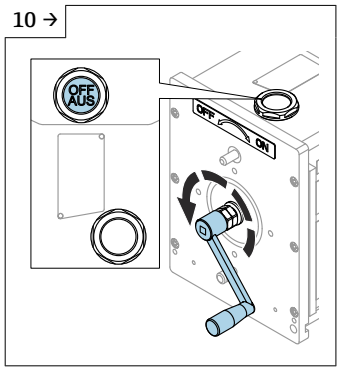


A0055569

- ⚠ CAUTION: RISK OF INJURY WHEN OPERATING THE CRANK! Observe the safety instructions at the beginning of the section.
- Using the crank, move the shutter to the "OFF/AUS" position.
- ℹ Alternatively, you can move the shutter with a 12 mm open-ended wrench.

11 →

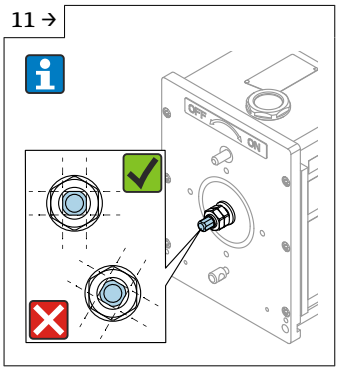


A0055572

- Align the surfaces of the square spindle holder in the vertical and horizontal position.

12 →

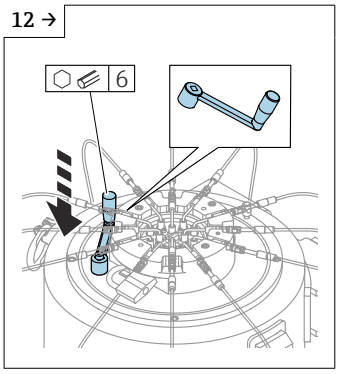


A0056355

- Return the crank to the parking position.

13 →

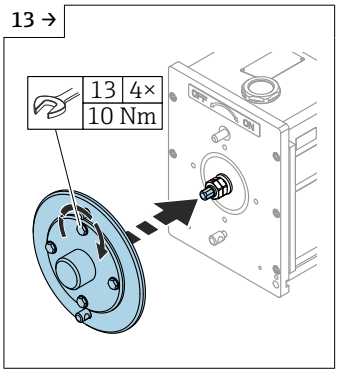


A0055592

- Attach the shutter cover and tighten the screws.

14 →

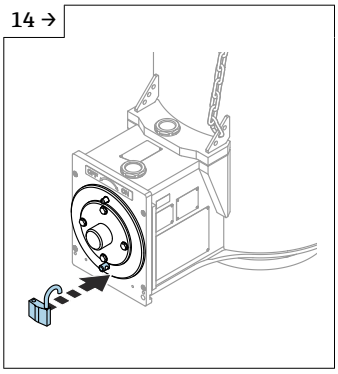

A0055573

- Attach the lock to the shutter cover.

15 →

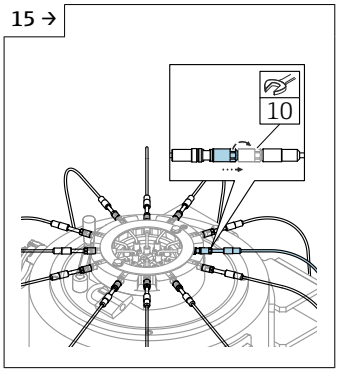


A0056391

- Unscrew the locking sleeves of the rope extensions.

16 →

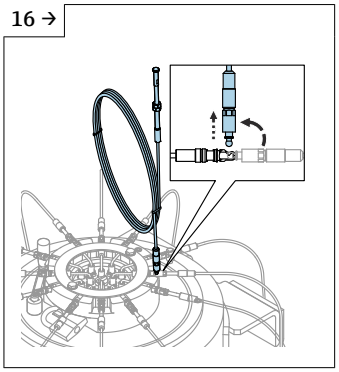

A0056392

- Separate the rope extensions from the rope separators via the ball head.
- ℹ Store the rope extensions safely and assign them to the appropriate source container.

17 →

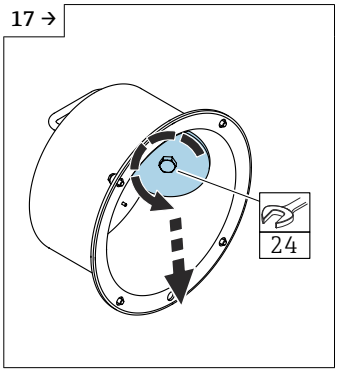


A0054695

- Remove the transportation lock from the cover.

18 →

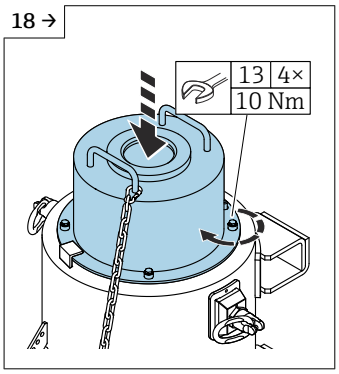


A0055668

- Fit the cover.
- Tighten the screws.
- ℹ The crank must be in the parking position.

19 →

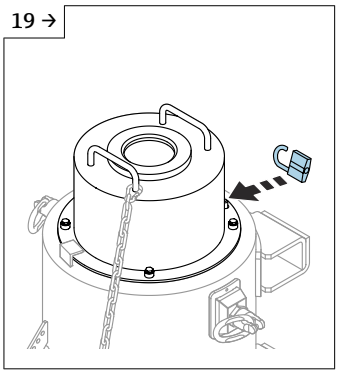

A0053254

- Attach the lock to the cover.

20

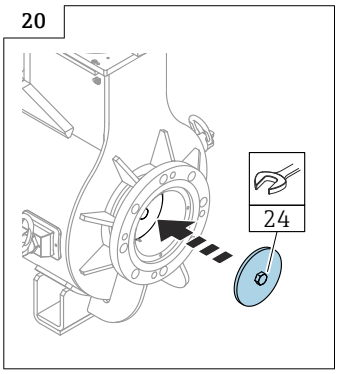


A0054696

- ⚠ WARNING: RADIATION! INCREASED RADIATION POSSIBLE WHEN ATTACHING THE TRANSPORTATION LOCK! Observe the safety instructions at the beginning of the section.
- Attach the transportation lock.

ℹ The source container can be removed from the measurement area if necessary. See section "Removing the source container from the measuring point".

## 7.5 Loading and exchanging the radiation sources

Loading and exchanging the radiation sources requires the maintenance personnel – radiation or disposal personnel qualification. See the "Requirements for personnel" section.

This procedure requires expert knowledge above and beyond the operation of the measuring point. Before radiation sources are loaded or exchanged, the procedure must be planned. In particular, the applicable legal radiation protection regulations for the handling of radioactive materials must be observed, see section -> "Basic safety instructions" -> "Legal regulations for radiation protection".

The loading and exchanging of radiation sources must be carried out in accordance with the description in SD03325F.

# 8 Maintenance

Maintenance requires qualified operating, installation and service personnel.

Maintenance work involving the radiation source requires the maintenance personnel – radiation qualification.

See the "Requirements for personnel" section.

**WARNING**

**Health hazard from inadequate shielding of the radiation source.**
In the event of visible irregularities on the source container, adequate shielding from ionizing radiation cannot be guaranteed.

- Inform the responsible radiation safety officer immediately for further instructions.
- Do not attempt to carry out any repairs of your own. Repairs or maintenance beyond the scope of the routine formal inspection must be carried out only by Endress+Hauser or a person authorized for this purpose.

Maintenance is performed due to deficiencies identified by a recurrent test. Under normal intended use and adherence to the specified environmental and operating conditions, no periodic maintenance tasks are defined.

## 8.1 Recurrent tests

Recurrent tests depend on the type of use. In addition to being used as a source container, the container can also be used as a Type A package. Use as a Type A package requires specific tests. Recurrent tests and tests for use as a Type A package must be documented according to the test instructions.

Tests must be carried out by qualified, technically competent person. The results of recurrent testing must be documented in a container-specific test book.

- The user is responsible for maintaining a test log for documenting recurrent tests.
- A template for recurrent tests is provided below.
- A template for a test log is provided below.

### 8.1.1 Checking intervals

Observe national requirements and document specifications

| Check situation | Interval | Check for |
|---|---|---|
| Before transport | Always | Condition of lifting points |
| After transport | Always | Condition of lifting points |

| Check situation | Interval | Check for |
|---|---|---|
| In the process | Annually | Integrity<br>Function test |
| Storage in "loaded" condition* | Every five years | Integrity<br>Safety |
| Before dispatch in "loaded" condition* | Always | Integrity<br>Safety<br>Compliance with all regulations |
| Before dispatch in "empty" condition** | Always | Integrity<br>Function test |
| Before loading | Always | Integrity<br>Function test |

* There are radiation sources in the source container

** The source container is not contaminated

- The time between dispatch and checking must not exceed 6 months.
- The time between leak test and dispatch must not exceed 3 months.
- Use of a loaded source container in the process corresponds to storage in loaded condition from the point of view of transport, i.e. use as a Type A package.

## 8.1.2 Integrity tests

The following components are inspected: housing, cover, source magazine, source holder, shutter lid, transportation lock, theft protection device, labeling, lifting points and seals.

Internal housing components and internal shielding cannot be directly inspected.

It is assumed that damage, e.g., due to corrosion, will already be clearly visible on externally accessible parts.

Observe national requirements as well as documentation requirements.

### After transport

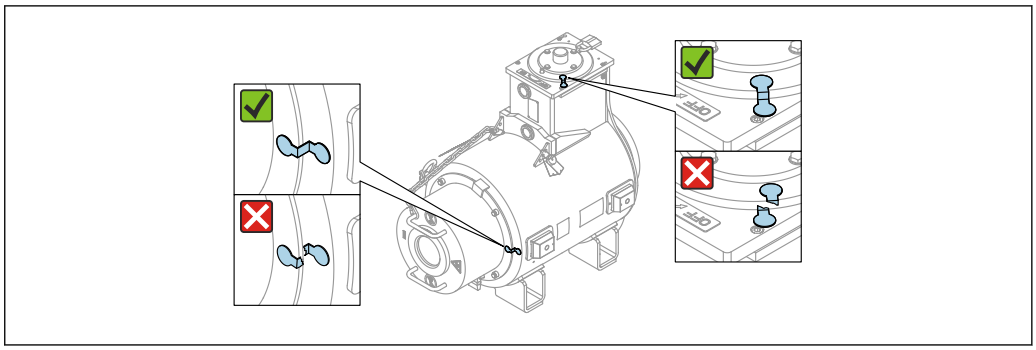


32 *Security seals on the source container*

1. Check whether security seals are present.
2. Check that the security seal does not show signs of damage or cracks.

### General

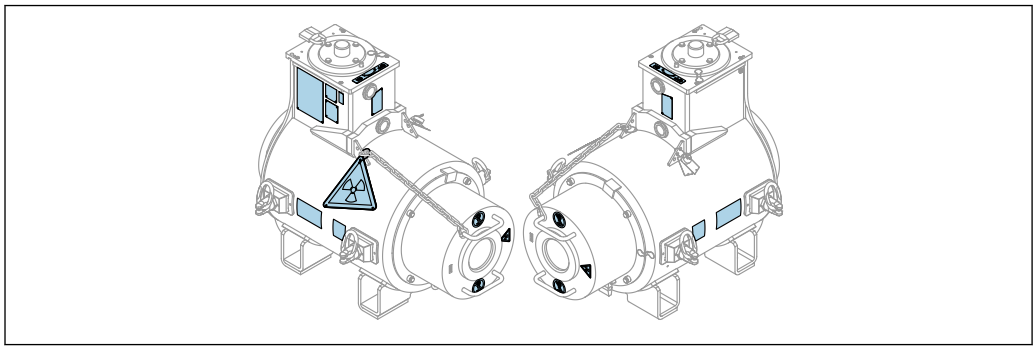

A0056842

*33 Position of metal signs and stick-on labels*

- For the position of nameplates, see section "Product description -> Overview".
- For an explanation of how to interpret the nameplates, see section "Incoming acceptance and product identification -> Product identification -> Nameplate".

1. Identify and document the source container and radiation sources based on the nameplates.
2. Check that the correct markings are in place.
3. Check that nameplates and warning signs are firmly attached and easy to read.
4. Check that the source container and the cover are externally sound.
5. Check that the source container shows no signs of significant corrosion that could compromise safe keeping of the radiation sources.
6. Check that the cover shows no signs of significant corrosion.
7. Check that the source container and cover show no signs of damage caused by fire, falling or collision.
8. Check that the weld seams are intact.
9. Check that the shutter position is easy to read in the "ON/AN" and "OFF/AUS" position.
   ↳ See section "Product description -> Shutter".

### Windows

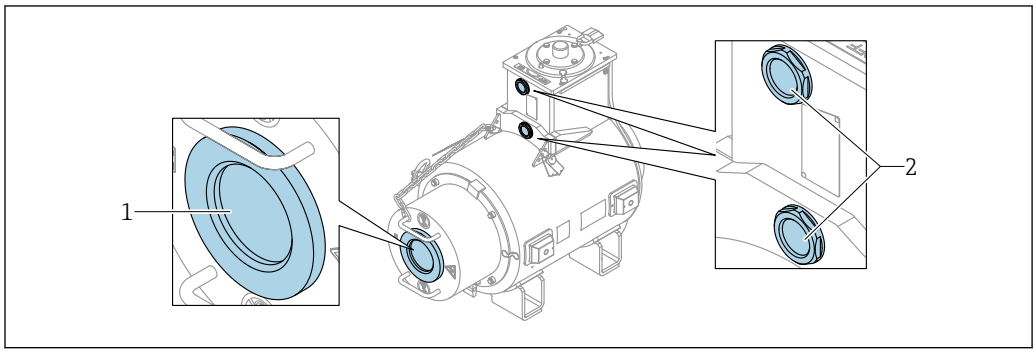


A0056838

*34 Position of the windows*

*1 Window on cover*
*2 Windows on shutter*

1. Check that the cover window is transparent and not fouled.

2. Check that the windows for reading the shutter position are transparent and not fouled.

### Threaded connections on the housing

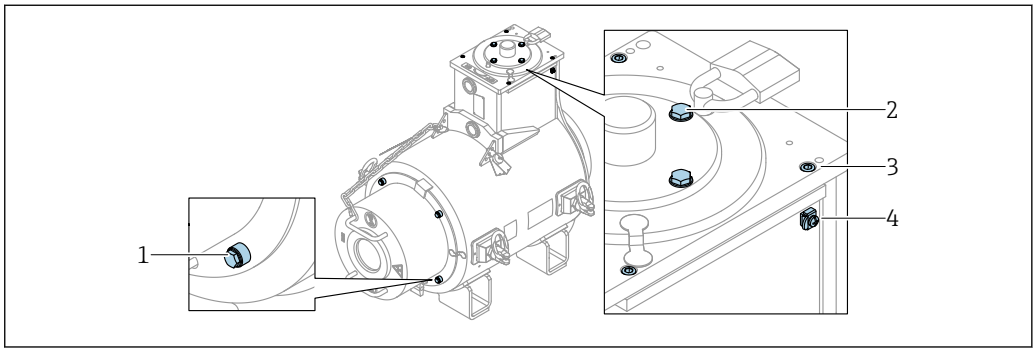


35 *Threaded connections on the housing*

1 *Screws for securing the cover*
2 *Screws of the anti-twist device cover*
3 *Screws of the shutter cover*
4 *Ground terminal*

1. Check that all screws are present.
2. Check that all screws for securing the cover are firmly tightened.
3. Check that all screws of the anti-twist device cover are firmly tightened.
4. Check that all screws of the shutter cover are firmly tightened.
5. If the ground terminal is being used, check that the ground cable is firmly screwed into the ground terminal.

### Seals

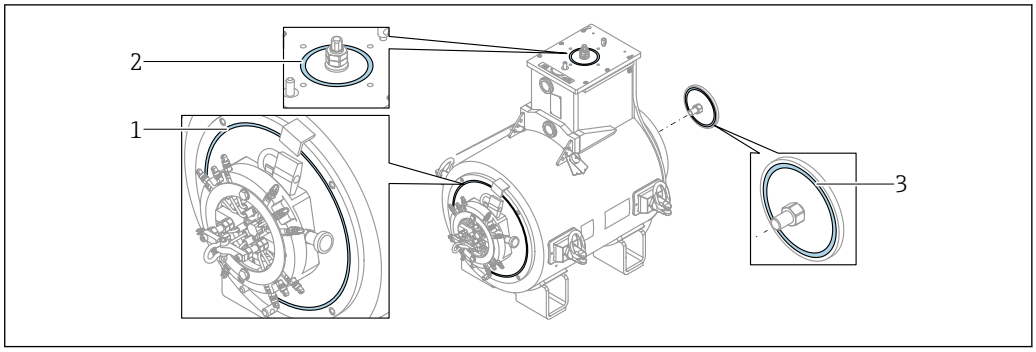


36 *Seals*

1 *Housing cover seal*
2 *Housing anti-twist device seal*
3 *Housing transport lock seal*

1. Check whether the seals are mechanically damaged.
   ↳ Exchange if necessary
2. Check whether the seals are worn.
   ↳ Exchange if necessary

### Anti-theft protection

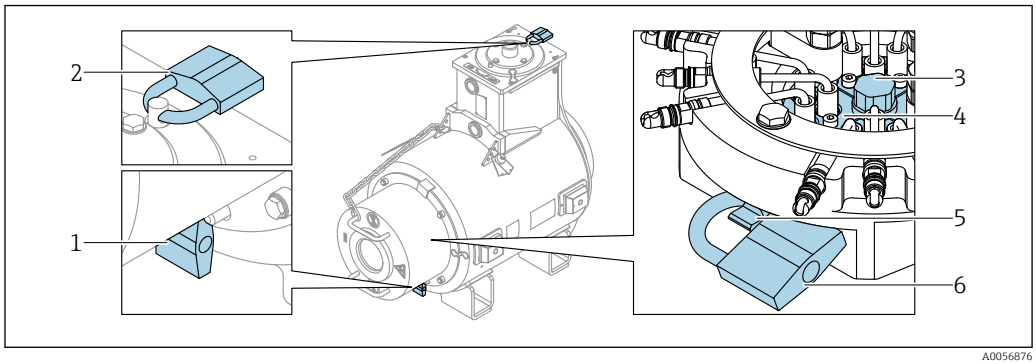


37 *Anti-theft protection components*

1 *Cover lock*
2 *Anti-twist device lock*
3 *Securing pin*
4 *Lock washers*
5 *Source security rod*
6 *Source magazine lock*

1. Check that all components of the anti-theft device for preventing removal of the source holders are present, undamaged and in working order.
2. Check that the keys for the locks are present.

### Source magazine and source holder

**DANGER**

**Risk of injury from ionizing radiation.**
Hazard for persons and the environment posed by ionizing radiation and contamination. Ionizing radiation and contamination could increase the risk of cancer and the risk of genetic birth defects. Depending on the dose received, ionizing radiation could lead to immediate physical harm, such as nausea, vomiting, hair loss, changes to blood count, serious tissue damage and even death.

- Never check the source holders directly.
- Carry out checks only on the rope separator and rope extension.

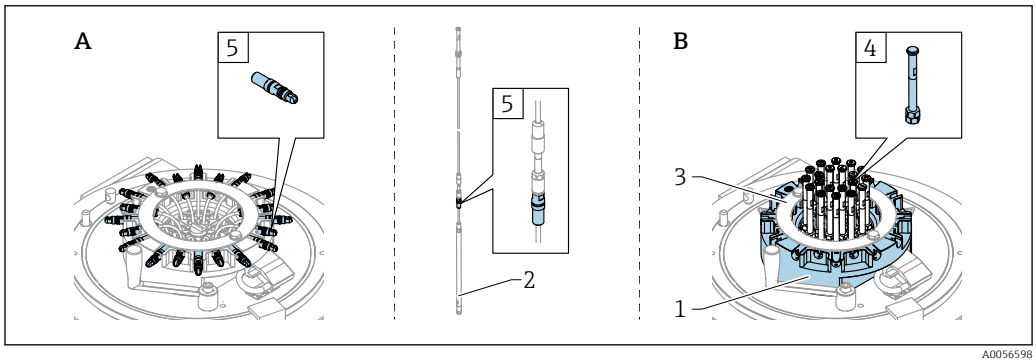


38 *Source magazine and source holder*

A *Source holder in "OFF/AUS" position with retaining ring*
B *Source holder in "ON/AN" position with retaining ring and mounted rope extensions*
1 *Source magazine*
2 *Source holder*
3 *Fixing ring*
4 *End of rope extension*
5 *Rope separator*

### Checking the fixing ring

1. Check whether the fixing ring is securely installed.
2. Inspect the fixing ring for corrosion.
   ↳ Visual inspection
3. Inspect the fixing ring for damage.
   ↳ Visual inspection

### Checking the source magazine

1. Check the source magazine for corrosion.
   ↳ Visual inspection
2. Check the source magazine for damage.
   ↳ Visual inspection

### Checking the source holder indirectly for corrosion

The source holders are in process:

1. Check the end of the rope extensions for corrosion.
   ↳ Visual inspection
2. Check the end of the rope extensions for damage.
   ↳ Visual inspection
3. Perform a direct inspection as part of the leak test. See the section on "Leak testing".

### Checking the source holder indirectly for corrosion

The source holders are in the source container:

1. Check the rope separators for corrosion.
   ↳ Visual inspection
2. Check the rope separators for damage.
   ↳ Visual inspection

### Transport lock and crank

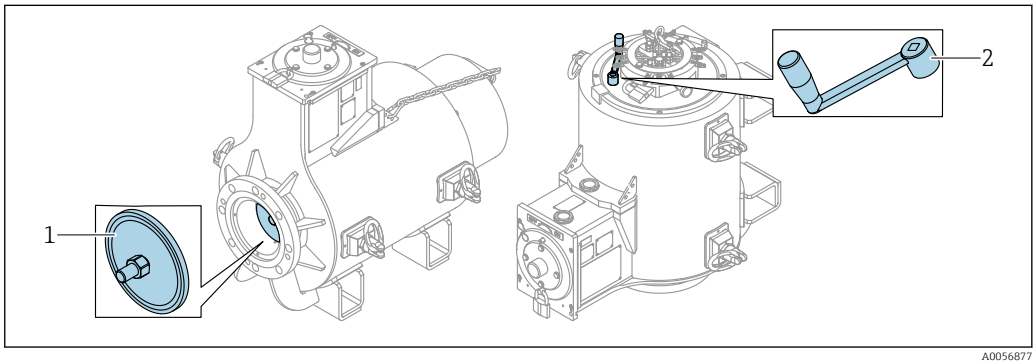


*1 Transport lock*
*2 Crank*

1. Check that the transport lock is present.
2. Check that the crank for opening and closing the shutter is present.
   ↳ After use, move the crank into parking position.
3. For storage, fasten the transport lock to the shutter.
4. During operation, reseal the exit opening with the transport lock or park the transport lock in the cover.

### Functional tests

The test may only be performed when the source container is in an unloaded condition. There must be no radiation sources inside the source container. The inspection window in the cover allows verification of whether radiation sources are present in the source container.

**DANGER**

**Risk of injury from ionizing radiation.**
Ionizing radiation could increase the risk of cancer and the risk of genetic birth defects. Depending on the dose received, ionizing radiation could lead to immediate physical harm, such as nausea, vomiting, hair loss, changes to blood count, serious tissue damage and even death.

- Do **not** open the shutter if the radiation sources are in the source container.

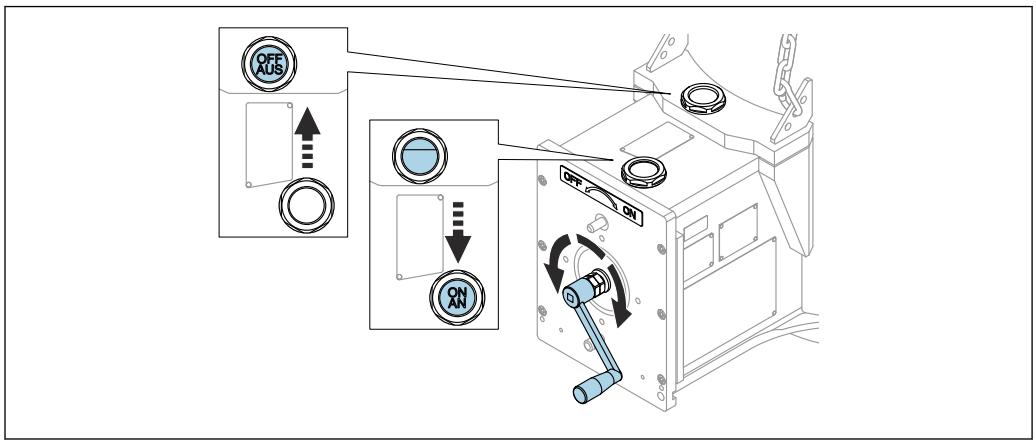


*39 Checking the functional integrity of the shutter*

### Checking the functional integrity of the shutter

- Visually inspect through the inspection window in the cover to ensure that **no** radiation sources are inside the source container.
  Close and reopen the shutter by turning the crank once.
  - ↳ Ropes connected to the radiation sources in the protection pipe prevent complete closure.

*Checking the retrievability of the radiation sources (radiation sources are in process)*

- Use a single source holder to check whether it can be pulled back into the source magazine.

*Checking the retrievability of the radiation sources (before loading)*

- Use a dummy rod to test whether the dummy rod can be moved smoothly in all source holder slots.

### Checking the locking devices on the source container

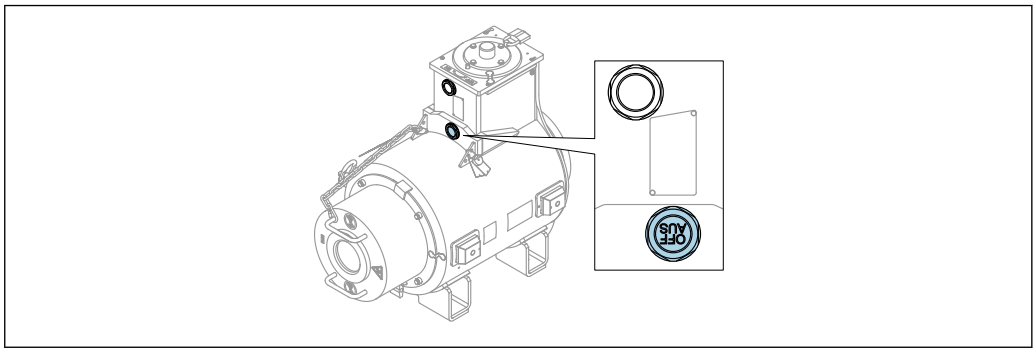


A0056878

40 *Windows of the shutter*

### Check that the shutter is closed

Through the windows, it is possible to see the condition of the shutter

1. Check that the windows are transparent and not fouled.
2. Check that the "OFF/AUS" position is visible in the window.
   ↳ The shutter is closed when the "OFF/AUS" position is visible.

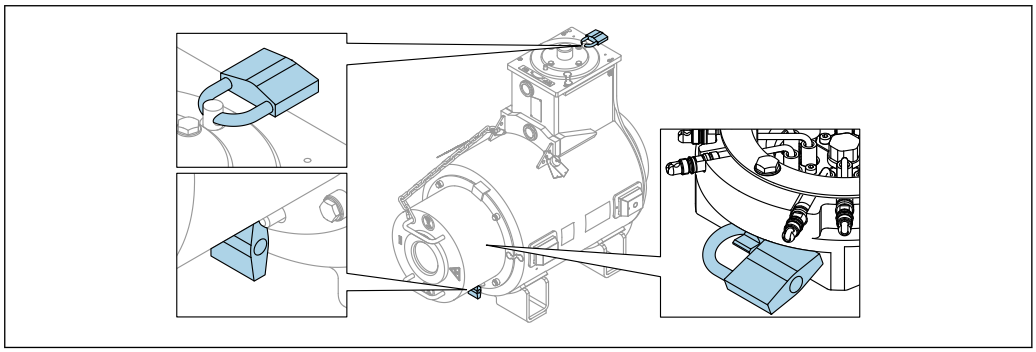

A0056879

41 *Locks*

### Check that all three locks are fitted and closed

1. Check that the cover is closed with the lock.
2. Check that the anti-twist device is closed with the lock.
3. Check that the lock of the anti-theft protection is closed (visible under the cover).

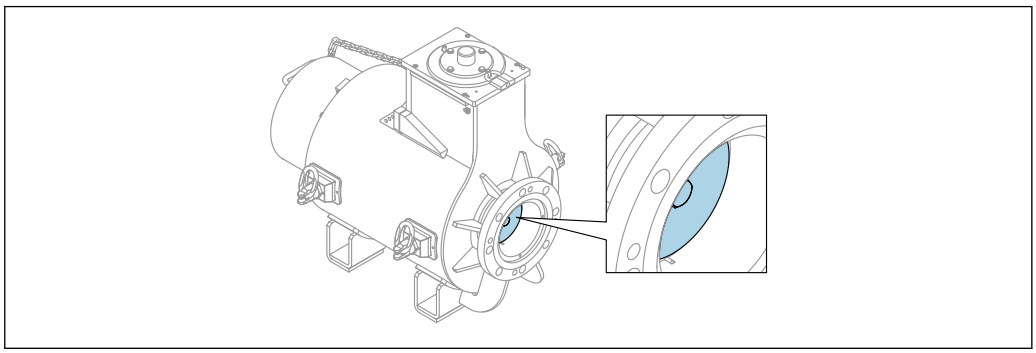

A0056880

42 *Transport lock*

### Check that the transport lock is fitted and firmly fastened

1. Fit the transport lock for storage and transport.
2. Fit the transport lock with the source magazine lowered.

Carry out a documented leak test, see section "Maintenance -> Maintenance work -> Leak test".

### Checks for compliance with all regulations (for dispatch)

It is prohibited to dispatch the source container without valid and complete documents.

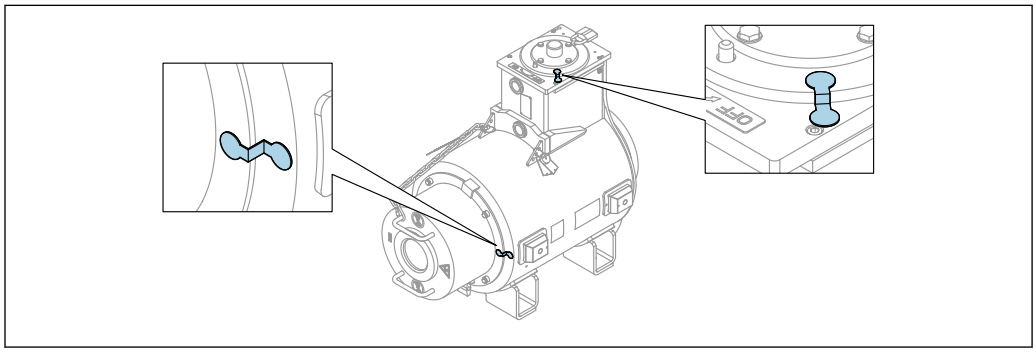


43 *Security seals on the source container*

### Dispatch as Type A package:

1. Make sure that the source container is in the OFF position and the transport lock is fitted.
2. Make sure that the transport index is present and the category is correctly marked for the radiation source concerned.
3. Make sure that the source container is marked in accordance with international regulations concerning the transport of dangerous goods (ADR/RID, DGR/IATA).
4. Before dispatch, fit a security seal to the cover and anti-twist device.

### Checking the condition of the lifting points

**WARNING**

**Lifting points corroded, leading to possible falling of the container.**
This could result in personal injury or even death as a consequence of impact.
- ▶ In an aggressive environment, remove the lifting points and store them safely.
- ▶ Check the lifting points carefully before each use.

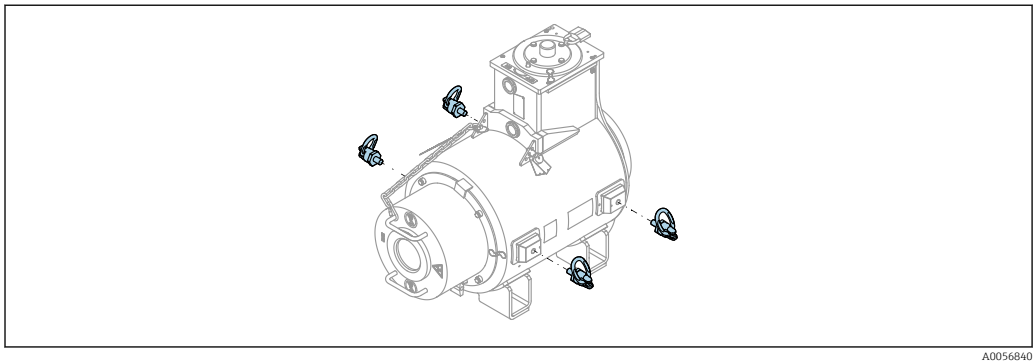


44 *Lifting points on the source container*

Lifting points are not permanently in use. For this reason, the lifting points must be checked before each use instead of annually as specified by the manufacturer.

1. Check the lifting points before **each** use in accordance with the manufacturer's specifications.
2. Observe the operating instructions for the lifting points.
   ↳ https://www.rud.com Enter PP-B-1,5t-M16 in the search bar.
3. Before the lifting points are fitted, clean away dirt from all four threads on the housing.

### 8.1.3 Template for recurrent tests

| Company | |
|---|---|
| Name | |
| Address | |
| Name of inspector and role | |

| Source container | FQG_-_____ |
|---|---|

| Radiation source | |
|---|---|
| Isotope | ❑ $^{137}Cs$<br>❑ $^{60}Co$ |
| Serial number of the radiation source | |
| Nominal activity (MBq / GBq) | |
| Date of manufacture | |

- A: ❑ After transport
- B: ❑ In process ❑ Before loading
- C: ❑ Before shipment ("empty")
- D: ❑ During storage ("loaded")
- E: ❑ Before shipment ("loaded")

| A | B | C | D | E | Tests | ☑ | ☒ |
|---|---|---|---|---|---|---|---|
| x | | | | x | Seals are present and not broken. | | |
| x | x | x | x | x | Markings are correct and clearly legible. | | |
| x | x | x | x | x | There is no significant corrosion on the source container that could compromise the safe storage of the radiation source(s). | | |
| x | x | x | x | x | There are no damages caused by fire, falls or collisions. | | |
| x | x | x | x | x | The weld seams are intact. | | |
| x | x | x | x | x | Inspection windows are clear, and the shutter position (ON or OFF) is clearly visible. | | |
| x | x | x | x | x | Screw connections on the source container are secure, and all screws are present. | | |
| x | x | x | x | x | Seals are in good condition and sealing surfaces are free from dirt. | | |
| x | x | x | x | x | All components of the theft protection devices are present and functional. | | |
| x | x | x | x | x | Source magazine and source holder are free of corrosion. | | |
| x | x | x | x | x | Fixing ring and securing plates are present and securely installed. | | |
| x | x | x | x | x | transportation lock and shutter crank are present. | | |
| | x | x | | | The shutter can be opened and closed with one crank rotation. | | |

| A | B | C | D | E | Tests | ☑ | ☒ |
|---|---|---|---|---|---|---|---|
| | x | x | | | Source holder can be retracted into the source magazine. | | |
| | | x | x | x | The shutter is closed (in OFF position). | | |
| | | x | x | x | All locks are fitted and closed. | | |
| | | x | x | x | The transportation lock is securely screwed into the shutter. | | |
| | | | x | x | Leak test has been carried out: The source container is sealed. | | |
| | | | | x | The leak testing report is no older than 3 months old and is included with the delivery documentation. | | |
| | | | | x | The transport index is available. | | |
| | | | | x | The source container is labeled according to international regulations concerning the transportation of hazardous materials (ADR/RID, DGR/IATA). | | |

Date Signature

### 8.1.4 Template for the creation of a logbook

The following information should be stated on the cover sheet:

| Logbook for a transport container | |
|---|---|
| Source container type | |
| Plant operator, user | |
| Identification number (nameplate) | |
| Date of acceptance certificate (initial check before commissioning) | |
| Manufacturer's details | |

The following information should be stated inside the logbook:
- Suitability description
- Acceptance certificate (check before commissioning)
- Handling instructions
- Technical data sheet
- Record of exchanged parts
- Logs of recurrent checks
- Records of miscellaneous incidents

## 8.2 Maintenance work

### 8.2.1 Overview of maintenance work

**DANGER**

**Risk of injury from ionizing radiation.**
Ionizing radiation could increase the risk of cancer and the risk of genetic birth defects. Depending on the dose received, ionizing radiation could lead to immediate physical harm, such as nausea, vomiting, hair loss, changes to blood count, serious tissue damage and even death.
▶ Do **not** open the shutter if the radiation sources are in the source container.

### Source container

1. Check source container for cracks, damage and severe corrosion.
   ↳ - If cracks, damage, or severe corrosion are found, replace the source container.
   - Contact the manufacturer.
   - Do not use as Type A packaging.
2. Before mounting the lifting points, clean all four threads on the housing from contaminants.
3. If necessary, tighten the screws of the shutter cover, the twist protection and the cover fastening.

### Cover

1. Check the cover for cracks and damage.
   ↳ If cracks or damage are found, replace the cover.
   Do not use as Type A packaging.
2. Check the cover for severe corrosion.
   ↳ If severe corrosion is found, replace the cover.
   Do not use as Type A packaging.

### Inspection windows

Clean the inspection windows.

1. Use a damp or dry cloth to clean the inspection windows for displaying the shutter position. Replace if necessary.
2. Use a damp or dry cloth to clean the inspection window in the cover. Replace if necessary.

### Source magazine and source holder

1. Check the source magazine for corrosion.
   ↳ Do not load if corrosion is present.
   Contact the manufacturer.
2. Check the source holder for corrosion.
   ↳ Do not load if corrosion is present.
   Contact the manufacturer.

If source holders cannot be retrieved or are corroded:

1. Initiate emergency measures.
2. Immediately inform the radiation safety officer.
3. Lower the source holder back into the process.
4. Contact the manufacturer.

### Shutter

If the shutter cannot be moved:

1. Immediately inform the radiation safety officer.
2. Inform the manufacturer.
3. Keep the radiation sources in the process.

### Transportation lock

If the transportation lock is missing or defective:

1. Do not ship the source container.
2. The source container must not be used as a Type A package without a transportation lock.

3. Order a transportation lock as a spare part.

**Theft protection**

1. Check the lock for proper function and smooth operation.
   ↳ If malfunctioning or difficult to operate, replace the lock (use the same type).
2. Check the lock for corrosion.
   ↳ If there is excessive corrosion, replace the lock (use the same type).
3. Inspect all components of the theft protection system for corrosion, damage, and completeness.
   ↳ Order corroded, missing, or damaged parts as spare parts.

**Labeling**

- Check signs for legibility.
  ↳ Replace signs in a timely manner if legibility is poor.

**Lifting points**

1. In aggressive environments, dismantle the lifting points and store them appropriately.
2. Check the lifting points for corrosion, wear, damage, and completeness.
   ↳ Replace corroded, worn or damaged lifting points.
   Order missing or damaged parts as spare parts.

**Seals**

1. The "Shutter channel seal" is an adhesive seal. Inspection and replacement are not intended. During maintenance of the shutter, the seal must always be replaced. Contact the manufacturer.
2. Replace the "Housing twist protection seal", "Housing transportation lock seal" and "Housing cover seal" if necessary; see section "Repair -> Spare parts".

**Flange screws and nuts**

1. Check all flange screws and nuts for damage.
2. Check the tightening torque and, if necessary, retighten to the specified torque.
3. Tightening torque 342 Nm.

### 8.2.2 Leak test

The leak test requires instructed personnel. The radiation safety officer is responsible for compliance with all regulations and for how it is carried out.

See the "Requirements for personnel" section.

Check the leak-tightness of the source capsules at regular intervals. The frequency of the leak tests must correspond to the intervals specified by the authorities or handling permit.

**⚠ WARNING**

**Risk of serious bodily harm if leak test not carried out.**

A leak test is not only required as part of routine checks but must also be performed whenever an incident occurs that may impair the casing around the radiation source. In such cases, the leak test must be arranged by the responsible radiation safety officer, with due consideration to the applicable regulations. The leak test must comprise both the source container and all other affected parts of the process vessel and must be performed as soon as possible after the incident. The leak test procedure described below is intended for the following situations:

- For routine tests during continuous operation
- When the source container has been in storage for an extended period
- When the source container is to be put back into operation after storage
- If the source container is to be used as a Type A package

### Leak test procedure

**⚠ WARNING**

**Be aware of the risk of possible contamination.**

- Use appropriate personal protective equipment.
- Follow safety measures when putting away the rope extensions.

Leak tests must be performed by a person or an organization authorized to provide leak test services, or using a wipe test kit. Wipe test kits must be used according to the manufacturer's instructions. Records of the test results must be stored.

Perform the following leak test procedure unless otherwise instructed:

*Source container is in the "Radiation switched on" state.*

1. Switch off the radiation (see the "Switching off the radiation beam" section).
2. When pulling back the rope extensions, wipe each rope along its entire length with suitable wipe test material.

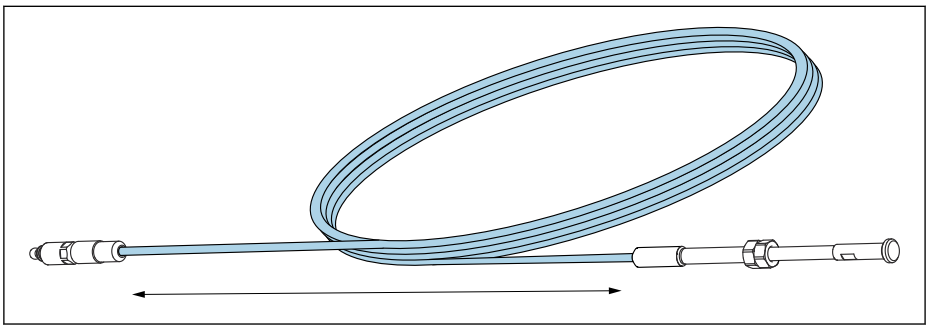

A0056014

3. When the "Switch off radiation" process is complete (cover not fitted), wipe the end of each source holder with suitable wipe test material.
   ↳ In doing so, pull the source holder back as far as it can go.

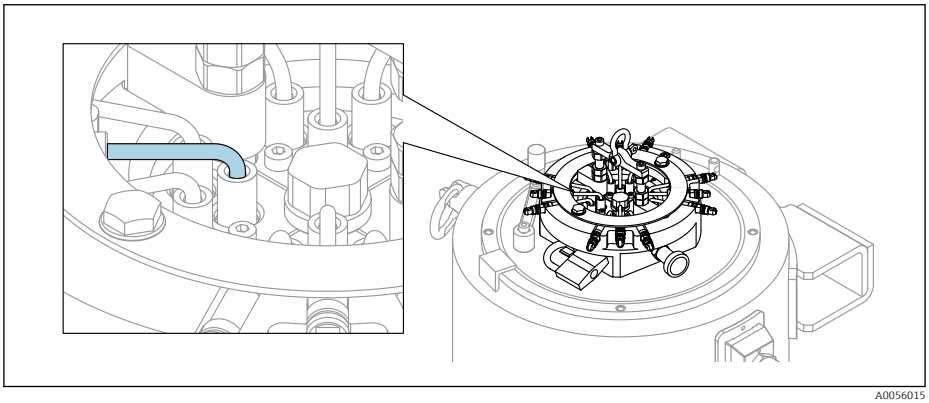

A0056015

4. Wipe around the insertion points of each source holder.
   ↳
   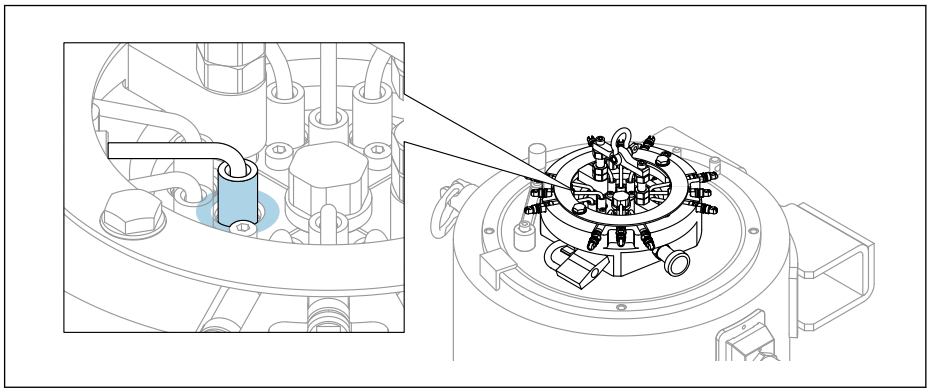
   A0056016

5. Have the wipe samples analyzed by an authorized organization. A source capsule is considered to be leaking if more than 185 Bq (5 nCi) is detected in the leak test sample.
   ↳ ℹ This limit value applies for the USA. National regulations may specify other limits.

*Source container is in the "Radiation switched off" state.*

1. Remove the cover.
2. Wipe the end of each source holder with suitable wipe test material.
   ↳
   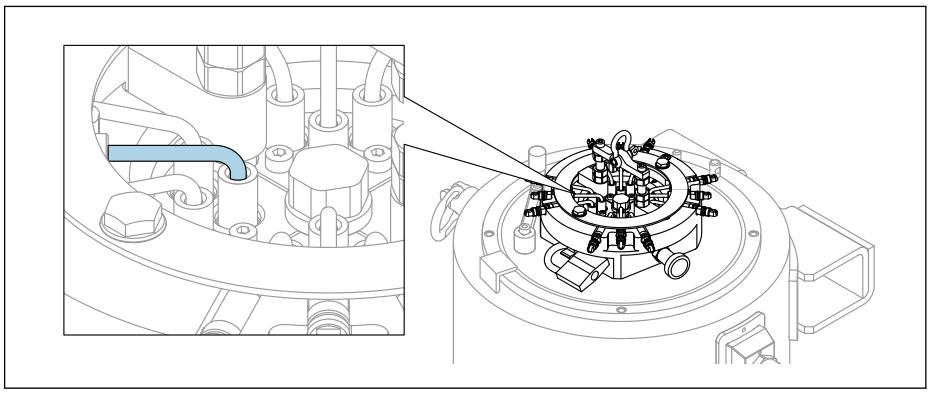
   A0056015

3. Wipe around the insertion points of each source holder.
   ↳
   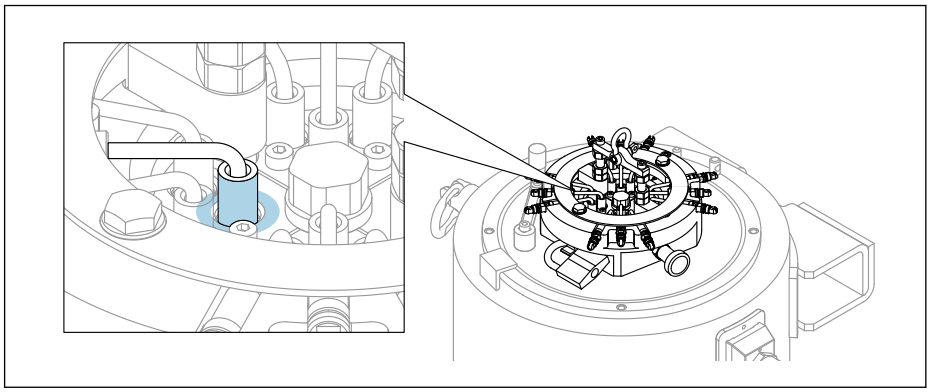
   A0056016

4. Have the wipe samples analyzed by an authorized organization. A source capsule is considered to be leaking if more than 185 Bq (5 nCi) is detected in the leak test sample.
   ↳ ℹ This limit value applies for the USA. National regulations may specify other limits.

**WARNING**

**Source capsule is potentially leaking.**

- Inform the radiation safety officer immediately and follow his instructions.
- Take appropriate measures to prevent a potential spread of radioactive contamination from the radiation source. Secure the radiation source.
- Inform the responsible authority immediately that a leaking radiation source has been detected.
- Observe national requirements.

### 8.2.3 Cleaning

**DANGER**

**Risk of injury from ionizing radiation!**

Ionizing radiation can increase the risk of cancer and genetic defects in offspring. Depending on the radiation dose, ionizing radiation can cause immediate physical harm such as nausea, vomiting, hair loss, changes in blood composition, and severe tissue damage that may lead to death.

- Follow all safety instructions during cleaning; see section "Basic safety instructions".

Measures: Clean the source container at regular intervals.

1. Clean the source container of any substances that impair its safety function.
2. Remove dirt, especially from sealing surfaces.
3. Keep labeling in legible condition.
4. Clean labels with a damp cloth.

### 8.2.4 Measures in case of corrosion

If there are clear signs of corrosion at the source container, the local dose rate around the device must be measured. If the value is significantly above the normal operation levels, cordon off the area and notify the radiation safety officer responsible.

**CAUTION**

**What to do if the source container is damaged**

- Corroded source containers must be exchanged immediately
- Only a genuine spare part may be used to exchange a damaged padlock

## 8.3 Measuring and test equipment

Dosimeter to check the controlled area

## 8.4 Endress+Hauser services

Endress+Hauser offers a wide variety of services for maintenance such as, maintenance service or device tests.

Your Endress+Hauser Sales Center can provide detailed information on the services.

# 9 Repair

Repair work requires the qualification "Authorized repair personnel".

See the "Requirements for personnel" section.

## 9.1 General notes

**Repairing the source container**

- Observe national legislation.
- Verify whether the repair is allowed under the relevant handling permit.
- Take all local conditions into account.
- Crucial factors for avoiding harmful radiation effects are distance, shielding and exposure time. For further information, see the "General instructions on radiation protection" section.
- Repair is only permitted with the switch in the "AUS/OFF" position, secured by the transport lock.
- Take the weight of the source container without pallet into consideration: max. 850 kg (1 874 lb)
- For more information on service and spare parts, contact Endress+Hauser Service: www.endress.com/worldwide.

## 9.2 Spare parts

For spare parts currently available for the product, see online at:
https://www.endress.com/deviceviewer (→ Enter serial number)

## 9.3 Endress+Hauser services

Endress+Hauser offers a wide range of services.

Your Endress+Hauser Sales Center can provide detailed information on the services.

## 9.4 Return

### 9.4.1 Federal Republic of Germany

Contact the responsible Endress+Hauser sales center to organize a return for the purpose of testing for reuse or recycling by Endress+Hauser.

### 9.4.2 Other countries

Contact the responsible Endress+Hauser sales center or appropriate authority to find a way of returning the device within your country, if possible. If it is not possible to return the device in your country, the next steps to be taken must be agreed with the Endress+Hauser sales center/representative concerned. The destination airport for potential returns is Frankfurt, Germany.

### 9.4.3 Conditions

The following conditions must be met before returning the device:

- An inspection certificate no more than three months old and confirming the leak-tightness of the radiation source must be submitted to Endress+Hauser (wipe test certificate). The wipe test can be carried out on the radiation sources themselves or on replacement wipe surfaces as described in the "Maintenance" section.
- The serial numbers of the radiation sources, isotope type ($^{137}Cs$), nominal activity, and date of manufacture of the radiation sources must be specified in accordance with the radiation source certificate. This data is listed in the documents supplied with the radiation sources.
- The source container must not show any signs of severe corrosion that could jeopardize the safe storage of the radiation sources.
- The source container must not show signs of serious mechanical damage from fire, falls, or collisions.
- The "EIN/ON" and "AUS/OFF" mechanism must be in correct working order, as described in the "Commissioning" section.
- The source container must be secured in the "AUS/OFF" position by means of a transportation lock.
- If there are any doubts about the integrity of the source container, the radiation sources must be returned in a separate Type A transportation cask. Contact the responsible Endress+Hauser sales office for this purpose.
- The aforementioned tests must be confirmed in an inspection report. The inspection report must be enclosed when returning the product.
- The transport index must be determined according to the IAEA safety standards No. SSR-6 (https://www.iaea.org/publications/12288/regulations-for-the-safe-transport-of-radioactive-material) or equivalent national standards. The source container and any overpack must be labeled accordingly.
- The leak test certificate, the manufacturer's certificate for the radiation sources and the duly completed pre-return inspection report must be sent to Endress+Hauser before returning the device.

Following successful inspection, the Source Container FQG74 is suitable for shipment as a Type A package. The Type A labeling on the source container itself is, however, no longer valid for any subsequent device returns. Before the source container is returned, it must be relabeled according to international regulations concerning the transportation of hazardous materials (ADR/RID, DGR/IATA).

### 9.4.4 Pre-return inspection

| Company | |
|---|---|
| Name | |
| Address | |
| Name of inspector and role | |

| Source container | FQG_-_____ |
|---|---|

| Radiation source | |
|---|---|
| Isotope | ❑ $^{137}Cs$<br>❑ $^{60}Co$ |
| Serial number of the radiation source | |
| Nominal activity (MBq / GBq) | |
| Date of manufacture | |

| Tests | Result ✅ | Result ❌ |
|---|---|---|
| Wipe test report, not older than 3 months, enclosed with the return delivery documents | | |
| Leak test including test report, not older than 3 months, enclosed with the return delivery documents | | |
| A copy of the manufacturer's certificate of the radiation source is enclosed with the return delivery documents. | | |
| No significant corrosion on the source container that could jeopardize the safe storage of the radiation source | | |
| No signs of serious damage on the source container from fire, falls or collisions | | |
| Visual inspection: Weld seams intact? | | |
| "EIN/ON" and "AUS/OFF" mechanism works according to the Operating Instructions. | | |
| Is the source container secured with a lock in the "AUS/OFF" position and can the lock be operated? | | |
| Is the transportation lock fitted? | | |
| The transport index has been determined | | |
| The source container is labeled according to international regulations concerning the transportation of hazardous materials (ADR/RID, DGR/IATA). | | |

Date _____ Signature _____

## 9.5 Source container disposal

Observe the following notes during disposal:

- ▶ Observe national regulations.
- ▶ Comply with national regulations governing the disposal of radioactive radiation sources.
- ▶ Comply with national regulations governing the disposal of lead. The source container contains more than 0.1% lead with CAS no. 7439-92-1.
- ▶ Ensure proper separation and reuse of the device components.

# 10 What to do in an emergency

The procedure described here for what to do in an emergency must be initiated immediately for the safety of persons and the environment.

The procedure is designed to safeguard persons affected until the arrival of the responsible radiation safety officer who will then instruct further measures.

The custodian of the radioactive sources (i.e. the person appointed and authorized by the customer) is responsible for observing this procedure.

## 10.1 Radiation source no longer at the intended location

### 10.1.1 Description of the emergency

- Radiation source no longer present in the process application with the measuring system switched on
- Radiation source not present in the source container with the measuring system switched off

### 10.1.2 How to identify the emergency

In the following cases, a loss of the radiation source can be assumed:
- **No** measured value even though the measuring system is switched on
- Measured value even though the measuring system is **switched off**
- Suspicion of theft: Damaged security seals or missing locks suggest unauthorized tampering with the source container

### 10.1.3 Immediate measures

1. Leave the affected area immediately.
2. Make sure that no persons enter the suspected danger zone.
3. Notify the radiation safety officer.
4. Set up an extensive cordon around the suspected danger zone (e.g. with yellow marking tape or rope). For the cordon, also take into consideration the areas above and below the danger zone.
5. Mark the affected area with the international radiation warning symbol.
6. As soon as it becomes possible to measure radiation levels, determine the extent of the danger zone by carrying out a radiation measurement.

Crucial factors for avoiding harmful radiation effects are distance, shielding and exposure time. For further information, see the "General instructions on radiation protection" section.

### 10.1.4 Further measures

- In case of theft: Notify the authorities and police
- If suspected loss inside protection pipe:
  - Prevent access to the tank
  - Check for contamination
  - Check the integrity of the protection pipe
  - Contact Endress+Hauser

## 10.2 Source container or ionizing radiation cannot be switched off

**Description of the emergency**
The radiation cannot be switched off due to mechanical damage

**How to identify the emergency**
- Shutter cannot be moved into the "OFF/AUS" position
- Rope cannot be retracted (jammed)
- Slidable source holder can no longer be pulled back into the source magazine
- Variant with lowerable source magazine: Source magazine can no longer be pulled back into the source container
- Shutter cannot be closed

**Immediate measures**

1. Leave the radiation source in the process or return it swiftly into the process.
2. Variant with lowerable source magazine: Leave the source magazine in the process adapter or return it swiftly into the process adapter.

Radiation source, slidable source holder or source magazine can no longer be moved back into the process:

3. Leave the affected area immediately.
4. Make sure that no persons enter the suspected danger zone.

In all cases:

5. Notify the radiation safety officer.
6. Notify the person responsible for the process.

Crucial factors for avoiding harmful radiation effects are distance, shielding and exposure time. For further information, see the "General instructions on radiation protection" section.

**Further measures**
Shutter cannot be moved into the "OFF/AUS" position:
- Remove the source container and aim the beam exit channel against a very thick wall or floor
- Agree on how to proceed with the radiation safety officer and Endress+Hauser

## 10.3 Source container damaged

**Description of the emergency**

- Source container has been damaged, e.g. by fire or fall, leading to possible increased radiation exposure
- Shielding performance could be affected by the damage

**How to identify the emergency**

- External damage such as deformation or cracks
- External discoloration caused by fire
- Constituent parts of the source container broken off or deformed

**Immediate measures**

1. Leave the area around the source container immediately.
2. Make sure that no persons enter the suspected danger zone.
3. Notify the radiation safety officer.
4. Mark the affected area with the international radiation warning symbol.
5. As soon as it becomes possible to measure radiation levels, determine the extent of the danger zone by carrying out a radiation measurement.

Crucial factors for avoiding harmful radiation effects are distance, shielding and exposure time. For further information, see the "General instructions on radiation protection" section.

Carry out a leak test in the form of a wipe test.

**Further measures**

- Act appropriately in accordance with radiation measurement
- Exchange defective parts in all cases

## 10.4 Contamination detected

**Description of the emergency**

- Damage to the radiation source could lead to contamination
- For all events that could have caused damage to the radiation source, contamination should be suspected
- Contamination if alpha or beta radiation also still detected in addition to gamma radiation at point of use

**How to identify the emergency**

Leak test revealed leakage.

Example: Leak test in the form of a wipe test is positive.

**Immediate measures**

1. Leave the affected area immediately.
2. Persons in the affected area should be suspected of having been contaminated. Initiate protective measures for affected persons. Take appropriate measures to avoid spreading of the contamination.
3. Make sure that no persons enter the suspected danger zone.
4. Notify the radiation safety officer.
5. Set up an extensive cordon around the suspected danger zone (e.g. with yellow marking tape or rope). For the cordon, also take into consideration the areas above and below the danger zone.
6. Mark the affected area with the international radiation warning symbol.
7. As soon as it becomes possible to measure radiation levels, determine the extent of the danger zone by carrying out a radiation measurement.
8. Immediately forward all required information to the local and national authorities.

**Further measures**

Report the incident to Endress+Hauser.

## 10.5 Notifying the responsible authorities and Endress+Hauser

Incidents are generally subject to mandatory reporting.

1. Forward all required notifications to the responsible local and national authorities.
2. The responsible radiation safety officer, together with the local authority, implements suitable remedial measures for the problem concerned.
3. Forward all incidents to Endress+Hauser to ensure information feedback.

National regulations may require other procedures and reporting obligations.

Endress+Hauser assists with any questions and provides technical guidance.

# 11 Accessories

Accessories currently available for the product can be selected via the Product Configurator at www.endress.com:

1. Select the product using the filters and search field.
2. Open the product page.
3. Select **Spare parts & Accessories**.

# 12 Technical data

For additional technical data, see "Technical Information FQG74".

71696565

www.addresses.endress.com

For more Endress+Hauser product please visit: www.ainstru.com
Mail: Sales@ainstru.com

Endress+Hauser
People for Process Automation