BA01305D/06/EN/02.17
71380230

Valid as of version
01.01.zz (Device firmware)

Operating Instructions
Proline Promag E 100 HART

Electromagnetic flowmeter

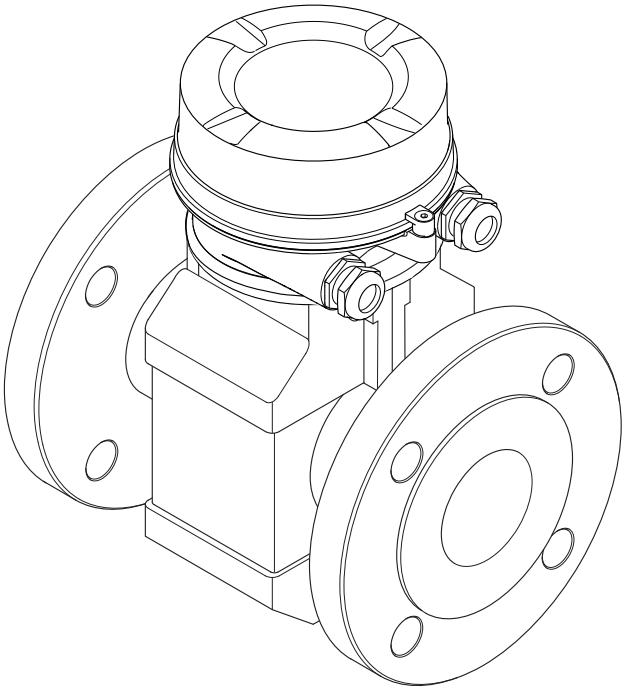

Endress+Hauser
People for Process Automation

- Make sure the document is stored in a safe place such that it is always available when working on or with the device.
- To avoid danger to individuals or the facility, read the "Basic safety instructions" section carefully, as well as all other safety instructions in the document that are specific to working procedures.
- The manufacturer reserves the right to modify technical data without prior notice. Your Endress+Hauser Sales Center will supply you with current information and updates to these instructions.

Table of contents

1 About this document 6
1.1 Document function 6
1.2 Symbols used 6
1.2.1 Safety symbols 6
1.2.2 Electrical symbols 6
1.2.3 Tool symbols 6
1.2.4 Symbols for certain types of information 7
1.2.5 Symbols in graphics 7
1.3 Documentation 7
1.3.1 Standard documentation 8
1.3.2 Supplementary device-dependent documentation 8
1.4 Registered trademarks 8

2 Basic safety instructions 9
2.1 Requirements for the personnel 9
2.2 Designated use 9
2.3 Workplace safety 10
2.4 Operational safety 10
2.5 Product safety 10
2.6 IT security 11

3 Product description 12
3.1 Product design 12
3.1.1 Device version with HART communication type 12

4 Incoming acceptance and product identification 13
4.1 Incoming acceptance 13
4.2 Product identification 13
4.2.1 Transmitter nameplate 14
4.2.2 Sensor nameplate 15
4.2.3 Symbols on measuring device 16

5 Storage and transport 17
5.1 Storage conditions 17
5.2 Transporting the product 17
5.2.1 Measuring devices without lifting lugs 17
5.2.2 Measuring devices with lifting lugs . . 18
5.2.3 Transporting with a fork lift 18
5.3 Packaging disposal 18

6 Installation 19
6.1 Installation conditions 19
6.1.1 Mounting position 19
6.1.2 Requirements from environment and process 21
6.2 Mounting the measuring device 23
6.2.1 Required tools 23
6.2.2 Preparing the measuring device 23
6.2.3 Mounting the sensor 23
6.2.4 Turning the display module 28
6.3 Post-installation check 28

7 Electrical connection 30
7.1 Connection conditions 30
7.1.1 Required tools 30
7.1.2 Requirements for connecting cable . . . 30
7.1.3 Terminal assignment 31
7.1.4 Pin assignment, device plug 32
7.1.5 Preparing the measuring device 32
7.2 Connecting the measuring device 32
7.2.1 Connecting the transmitter 33
7.2.2 Ensure potential equalization 34
7.3 Special connection instructions 37
7.3.1 Connection examples 37
7.4 Ensuring the degree of protection 39
7.5 Post-connection check 39

8 Operation options 41
8.1 Overview of operating options 41
8.2 Structure and function of the operating menu 42
8.2.1 Structure of the operating menu 42
8.2.2 Operating philosophy 43
8.3 Access to the operating menu via the web browser 44
8.3.1 Function range 44
8.3.2 Prerequisites 44
8.3.3 Establishing a connection 45
8.3.4 Logging on 46
8.3.5 User interface 47
8.3.6 Disabling the Web server 48
8.3.7 Logging out 48
8.4 Access to the operating menu via the operating tool 49
8.4.1 Connecting the operating tool 49
8.4.2 Field Xpert SFX350, SFX370 50
8.4.3 FieldCare 50
8.4.4 DeviceCare 52
8.4.5 AMS Device Manager 52
8.4.6 SIMATIC PDM 52
8.4.7 Field Communicator 475 52

9 System integration 53
9.1 Overview of device description files 53
9.1.1 Current version data for the device . . . 53
9.1.2 Operating tools 53
9.2 Measured variables via HART protocol 53

9.3 Other settings 55
9.3.1 Burst mode functionality in accordance with HART 7 Specification 55

10 Commissioning 57

10.1 Function check 57
10.2 Connecting via FieldCare 57
10.3 Setting the operating language 57
10.4 Configuring the measuring device 57
10.4.1 Defining the tag name 58
10.4.2 Configuring the current output 59
10.4.3 Configuring the pulse/frequency/ switch output 60
10.4.4 Configuring the local display 65
10.4.5 Configuring the output conditioning 67
10.4.6 Configuring the low flow cut off 68
10.4.7 Configuring empty pipe detection . . . 70
10.4.8 Configuring the HART input 70
10.5 Advanced settings 73
10.5.1 Setting the system units 73
10.5.2 Carrying out a sensor adjustment 75
10.5.3 Configuring the totalizer 75
10.5.4 Carrying out additional display configurations 77
10.5.5 Performing electrode cleaning 79
10.5.6 Using parameters for device administration 80
10.6 Simulation 81
10.7 Protecting settings from unauthorized access 83
10.7.1 Write protection via access code 83
10.7.2 Write protection via write protection switch 84

11 Operation 85

11.1 Reading the device locking status 85
11.2 Reading measured values 85
11.2.1 "Process variables" submenu 85
11.2.2 "Totalizer" submenu 86
11.2.3 Output values 87
11.3 Adapting the measuring device to the process conditions 88
11.4 Performing a totalizer reset 88
11.4.1 Function scope of the "Control Totalizer" parameter 89
11.4.2 Function scope of the "Reset all totalizers" parameter 89

12 Diagnostics and troubleshooting . . . 90

12.1 General troubleshooting 90
12.2 Diagnostic information via light emitting diodes 91
12.2.1 Transmitter 91
12.3 Diagnostic information in the Web browser . . 92
12.3.1 Diagnostic options 92
12.3.2 Calling up remedy information 93
12.4 Diagnostic information in DeviceCare or FieldCare 93
12.4.1 Diagnostic options 93
12.4.2 Calling up remedy information 94
12.5 Adapting the diagnostic information 95
12.5.1 Adapting the diagnostic behavior 95
12.5.2 Adapting the status signal 95
12.6 Overview of diagnostic information 96
12.7 Pending diagnostic events 98
12.8 Diagnostic list 99
12.9 Event logbook 99
12.9.1 Reading out the event logbook 99
12.9.2 Filtering the event logbook 100
12.9.3 Overview of information events 100
12.10 Resetting the measuring device 101
12.10.1 Function scope of the "Device reset" parameter 101
12.11 Device information 101
12.12 Firmware history 104

13 Maintenance 105

13.1 Maintenance tasks 105
13.1.1 Exterior cleaning 105
13.1.2 Interior cleaning 105
13.1.3 Replacing seals 105
13.2 Measuring and test equipment 105
13.3 Endress+Hauser services 105

14 Repairs 106

14.1 General notes 106
14.1.1 Repair and conversion concept 106
14.1.2 Notes for repair and conversion 106
14.2 Spare parts 106
14.3 Endress+Hauser services 106
14.4 Return 106
14.5 Disposal 107
14.5.1 Removing the measuring device 107
14.5.2 Disposing of the measuring device . . 107

15 Accessories 108

15.1 Device-specific accessories 108
15.1.1 For the transmitter 108
15.1.2 For the sensor 108
15.2 Communication-specific accessories 108
15.3 Service-specific accessories 109
15.4 System components 109

16 Technical data 110

16.1 Application 110
16.2 Function and system design 110
16.3 Input 110
16.4 Output 112
16.5 Power supply 115
16.6 Performance characteristics 116
16.7 Installation 117

16.8 Environment 117
16.9 Process 118
16.10 Mechanical construction 120
16.11 Operability 124
16.12 Certificates and approvals 126
16.13 Application packages 127
16.14 Accessories 128
16.15 Supplementary documentation 128

Index 130

1 About this document

1.1 Document function

These Operating Instructions contain all the information that is required in various phases of the life cycle of the device: from product identification, incoming acceptance and storage, to mounting, connection, operation and commissioning through to troubleshooting, maintenance and disposal.

1.2 Symbols used

1.2.1 Safety symbols

Symbol	Meaning
DANGER	**DANGER!** This symbol alerts you to a dangerous situation. Failure to avoid this situation will result in serious or fatal injury.
WARNING	**WARNING!** This symbol alerts you to a dangerous situation. Failure to avoid this situation can result in serious or fatal injury.
CAUTION	**CAUTION!** This symbol alerts you to a dangerous situation. Failure to avoid this situation can result in minor or medium injury.
NOTICE	**NOTE!** This symbol contains information on procedures and other facts which do not result in personal injury.

1.2.2 Electrical symbols

Symbol	Meaning
⎓	Direct current
∼	Alternating current
≂	Direct current and alternating current
⏚	**Ground connection** A grounded terminal which, as far as the operator is concerned, is grounded via a grounding system.
⏚	**Protective Earth (PE)** A terminal which must be connected to ground prior to establishing any other connections. The ground terminals are situated inside and outside the device: ▪ Inner ground terminal: Connects the protectiv earth to the mains supply. ▪ Outer ground terminal: Connects the device to the plant grounding system.

1.2.3 Tool symbols

Symbol	Meaning
	Allen key
	Open-ended wrench

1.2.4 Symbols for certain types of information

Symbol	Meaning
✓	**Permitted** Procedures, processes or actions that are permitted.
✓✓	**Preferred** Procedures, processes or actions that are preferred.
✗	**Forbidden** Procedures, processes or actions that are forbidden.
ℹ	**Tip** Indicates additional information.
	Reference to documentation.
	Reference to page.
	Reference to graphic.
▶	Notice or individual step to be observed.
1., 2., 3....	Series of steps.
↳	Result of a step.
?	Help in the event of a problem.
	Visual inspection.

1.2.5 Symbols in graphics

Symbol	Meaning
1, 2, 3, ...	Item numbers
1., 2., 3., ...	Series of steps
A, B, C, ...	Views
A-A, B-B, C-C, ...	Sections
EX	Hazardous area
~~EX~~	Safe area (non-hazardous area)
≋➡	Flow direction

1.3 Documentation

For an overview of the scope of the associated Technical Documentation, refer to the following:

- The *W@M Device Viewer* : Enter the serial number from the nameplate (www.endress.com/deviceviewer)
- The *Endress+Hauser Operations App*: Enter the serial number from the nameplate or scan the 2-D matrix code (QR code) on the nameplate.

For a detailed list of the individual documents along with the documentation code

1.3.1 Standard documentation

Document type	Purpose and content of the document
Technical Information	**Planning aid for your device** The document contains all the technical data on the device and provides an overview of the accessories and other products that can be ordered for the device.
Sensor Brief Operating Instructions	**Guides you quickly to the 1st measured value - Part 1** The Sensor Brief Operating Instructions are aimed at specialists with responsibility for installing the measuring device. ▪ Incoming acceptance and product identification ▪ Storage and transport ▪ Installation
Transmitter Brief Operating Instructions	**Guides you quickly to the 1st measured value - Part 2** The Transmitter Brief Operating Instructions are aimed at specialists with responsibility for commissioning, configuring and parameterizing the measuring device (until the first measured value). ▪ Product description ▪ Installation ▪ Electrical connection ▪ Operation options ▪ System integration ▪ Commissioning ▪ Diagnostic information
Description of Device Parameters	**Reference for your parameters** The document provides a detailed explanation of each individual parameter in the Expert operating menu. The description is aimed at those who work with the device over the entire life cycle and perform specific configurations.

1.3.2 Supplementary device-dependent documentation

Additional documents are supplied depending on the device version ordered: Always comply strictly with the instructions in the supplementary documentation. The supplementary documentation is an integral part of the device documentation.

1.4 Registered trademarks

HART®
Registered trademark of the FieldComm Group, Austin, Texas, USA

Microsoft®
Registered trademark of the Microsoft Corporation, Redmond, Washington, USA

2 Basic safety instructions

2.1 Requirements for the personnel

The personnel for installation, commissioning, diagnostics and maintenance must fulfill the following requirements:
- Trained, qualified specialists must have a relevant qualification for this specific function and task.
- Are authorized by the plant owner/operator.
- Are familiar with federal/national regulations.
- Before starting work, read and understand the instructions in the manual and supplementary documentation as well as the certificates (depending on the application).
- Follow instructions and comply with basic conditions.

The operating personnel must fulfill the following requirements:
- Are instructed and authorized according to the requirements of the task by the facility's owner-operator.
- Follow the instructions in this manual.

2.2 Designated use

Application and media
The measuring device described in these Brief Operating Instructions is intended only for flow measurement of liquids with a minimum conductivity of 5 µS/cm.

Depending on the version ordered, the measuring device can also measure potentially explosive, flammable, poisonous and oxidizing media.

Measuring devices for use in hazardous areas, in hygienic applications or where there is an increased risk due to process pressure, are labeled accordingly on the nameplate.

To ensure that the measuring device remains in proper condition for the operation time:
- Keep within the specified pressure and temperature range.
- Only use the measuring device in full compliance with the data on the nameplate and the general conditions listed in the Operating Instructions and supplementary documentation.
- Based on the nameplate, check whether the ordered device is permitted for the intended use in the hazardous area (e.g. explosion protection, pressure vessel safety).
- Use the measuring device only for media to which the process-wetted materials are sufficiently resistant.
- If the measuring device is not operated at atmospheric temperature, compliance with the relevant basic conditions specified in the associated device documentation is absolutely essential: "Documentation" section→ 🗎 7.
- Protect the measuring device permanently against corrosion from environmental influences.

Incorrect use
Non-designated use can compromise safety. The manufacturer is not liable for damage caused by improper or non-designated use.

⚠ WARNING
Danger of breakage due to corrosive or abrasive fluids!
- Verify the compatibility of the process fluid with the sensor material.
- Ensure the resistance of all fluid-wetted materials in the process.
- Keep within the specified pressure and temperature range.

NOTICE

Verification for borderline cases:

- For special fluids and fluids for cleaning, Endress+Hauser is glad to provide assistance in verifying the corrosion resistance of fluid-wetted materials, but does not accept any warranty or liability as minute changes in the temperature, concentration or level of contamination in the process can alter the corrosion resistance properties.

Residual risks

WARNING

The electronics and the medium may cause the surfaces to heat up. This presents a burn hazard!

- For elevated fluid temperatures, ensure protection against contact to prevent burns.

2.3 Workplace safety

For work on and with the device:

- Wear the required personal protective equipment according to federal/national regulations.

For welding work on the piping:

- Do not ground the welding unit via the measuring device.

If working on and with the device with wet hands:

- Due to the increased risk of electric shock, gloves must be worn.

2.4 Operational safety

Risk of injury.

- Operate the device in proper technical condition and fail-safe condition only.
- The operator is responsible for interference-free operation of the device.

Conversions to the device

Unauthorized modifications to the device are not permitted and can lead to unforeseeable dangers.

- If, despite this, modifications are required, consult with Endress+Hauser.

Repair

To ensure continued operational safety and reliability,

- Carry out repairs on the device only if they are expressly permitted.
- Observe federal/national regulations pertaining to repair of an electrical device.
- Use original spare parts and accessories from Endress+Hauser only.

2.5 Product safety

This measuring device is designed in accordance with good engineering practice to meet state-of-the-art safety requirements, has been tested, and left the factory in a condition in which it is safe to operate.

It meets general safety standards and legal requirements. It also complies with the EU directives listed in the device-specific EU Declaration of Conformity. Endress+Hauser confirms this by affixing the CE mark to the device.

2.6 IT security

We only provide a warranty if the device is installed and used as described in the Operating Instructions. The device is equipped with security mechanisms to protect it against any inadvertent changes to the device settings.

IT security measures in line with operators' security standards and designed to provide additional protection for the device and device data transfer must be implemented by the operators themselves.

3 Product description

The device consists of a transmitter and a sensor.

The device is available as a compact version:
The transmitter and sensor form a mechanical unit.

3.1 Product design

3.1.1 Device version with HART communication type

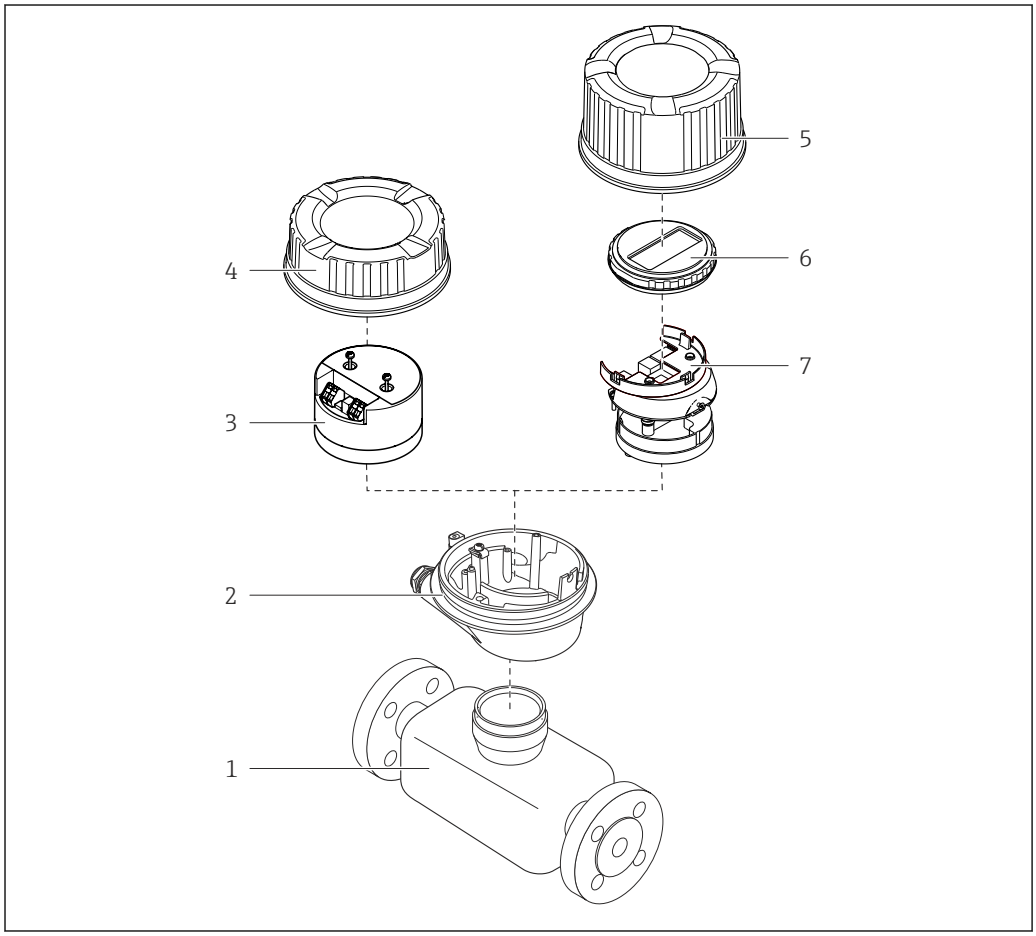

1 Important components of a measuring device

1 Sensor
2 Transmitter housing
3 Main electronics module
4 Transmitter housing cover
5 Transmitter housing cover (version for optional onsite display)
6 Onsite display (optional)
7 Main electronics module (with bracket for optional onsite display)

4 Incoming acceptance and product identification

4.1 Incoming acceptance

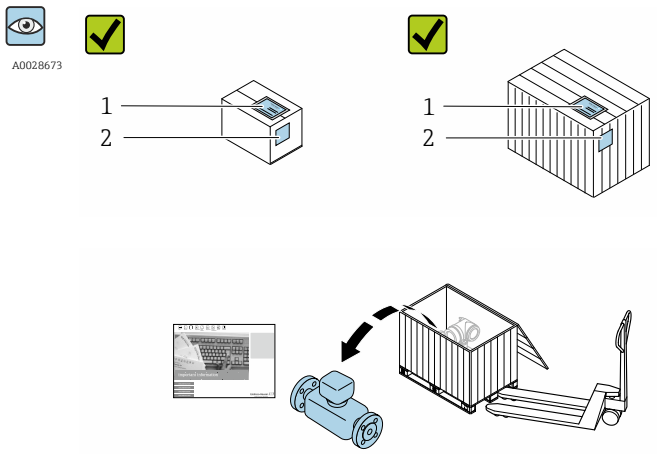

Are the order codes on the delivery note (1) and the product sticker (2) identical?

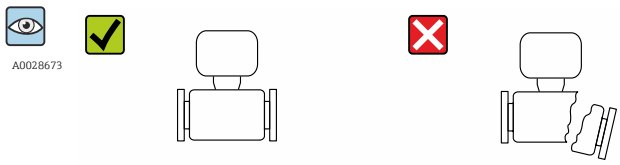

Are the goods undamaged?

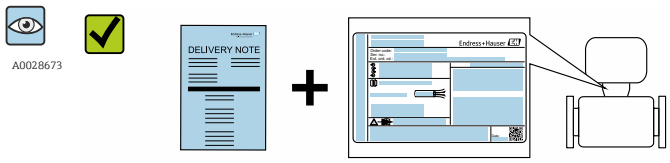

Do the nameplate data match the ordering information on the delivery note?

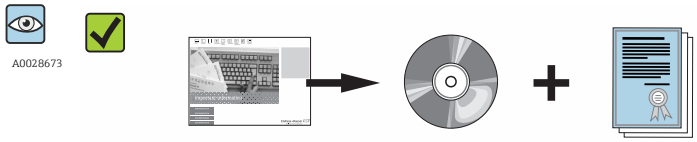

Is the CD-ROM with the Technical Documentation (depends on device version) and documents present?

- If one of the conditions is not satisfied, contact your Endress+Hauser Sales Center.
- Depending on the device version, the CD-ROM might not be part of the delivery! The Technical Documentation is available via the Internet or via the *Endress+Hauser Operations App*, see the "Product identification" section → 14.

4.2 Product identification

The following options are available for identification of the measuring device:
- Nameplate specifications
- Order code with breakdown of the device features on the delivery note
- Enter serial numbers from nameplates in *W@M Device Viewer* (www.endress.com/deviceviewer): All information about the measuring device is displayed.
- Enter the serial number from the nameplates into the *Endress+Hauser Operations App* or scan the 2-D matrix code (QR code) on the nameplate with the *Endress+Hauser Operations App*: all the information for the measuring device is displayed.

For an overview of the scope of the associated Technical Documentation, refer to the following:

- The chapters "Additional standard documentation on the device" → 📄 8 and "Supplementary device-dependent documentation" → 📄 8
- The *W@M Device Viewer*: Enter the serial number from the nameplate (www.endress.com/deviceviewer)
- The *Endress+Hauser Operations App*: Enter the serial number from the nameplate or scan the 2-D matrix code (QR code) on the nameplate.

4.2.1 Transmitter nameplate

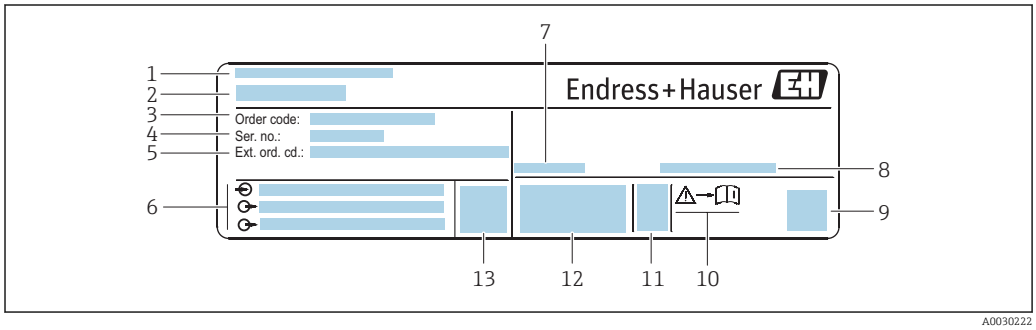

2 Example of a transmitter nameplate

1 *Manufacturing location*
2 *Name of the transmitter*
3 *Order code*
4 *Serial number (ser. no.)*
5 *Extended order code (Ext. ord. cd.)*
6 *Electrical connection data, e.g. available inputs and outputs, supply voltage*
7 *Permitted ambient temperature (T_a)*
8 *Degree of protection*
9 *2-D matrix code*
10 *Document number of safety-related supplementary documentation*
11 *Manufacturing date: year-month*
12 *CE mark, C-Tick*
13 *Firmware version (FW)*

4.2.2 Sensor nameplate

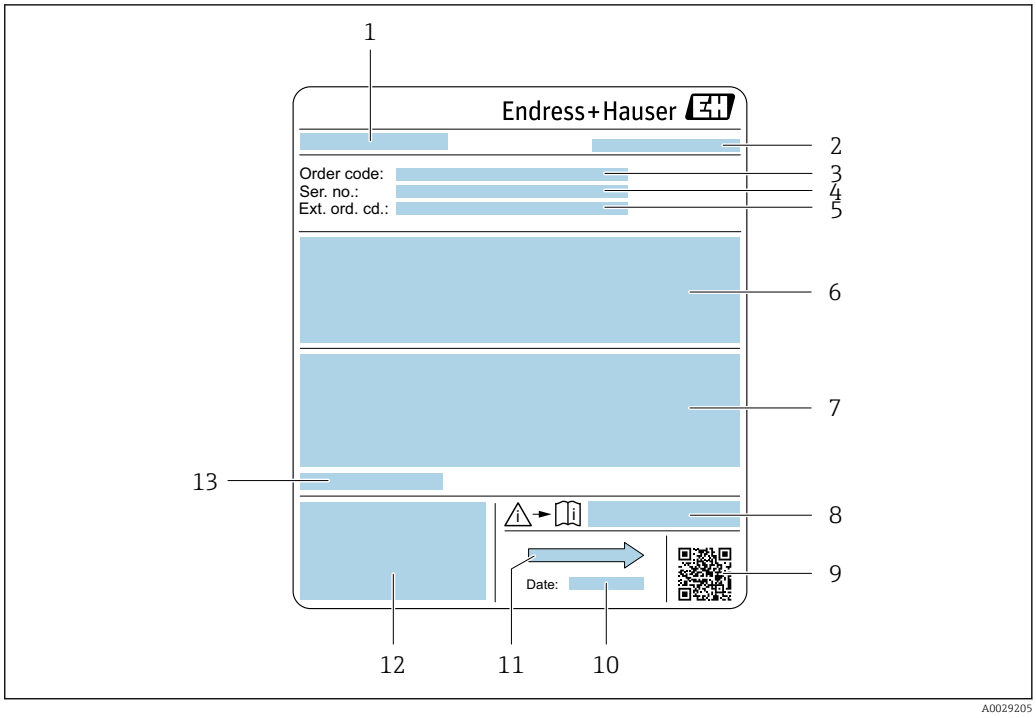

3 Example of sensor nameplate

1 *Name of the sensor*
2 *Manufacturing location*
3 *Order code*
4 *Serial number (ser. no.)*
5 *Extended order code (Ext. ord. cd.)*
6 *Flow; nominal diameter of the sensor; pressure rating; nominal pressure; system pressure; fluid temperature range; material of liner and electrodes*
7 *Approval information for explosion protection, Pressure Equipment Directive and degree of protection*
8 *Document number of safety-related supplementary documentation* → 📄 *128*
9 *2-D matrix code*
10 *Manufacturing date: year-month*
11 *Flow direction*
12 *CE mark, C-Tick*
13 *Permitted ambient temperature (T_a)*

Order code
The measuring device is reordered using the order code.

Extended order code
- The device type (product root) and basic specifications (mandatory features) are always listed.
- Of the optional specifications (optional features), only the safety and approval-related specifications are listed (e.g. LA). If other optional specifications are also ordered, these are indicated collectively using the # placeholder symbol (e.g. #LA#).
- If the ordered optional specifications do not include any safety and approval-related specifications, they are indicated by the + placeholder symbol (e.g. XXXXXX-ABCDE +).

4.2.3 Symbols on measuring device

Symbol	Meaning
⚠	**WARNING!** This symbol alerts you to a dangerous situation. Failure to avoid this situation can result in serious or fatal injury.
📖	**Reference to documentation** Refers to the corresponding device documentation.
⏚	**Protective ground connection** A terminal which must be connected to ground prior to establishing any other connections.

5 Storage and transport

5.1 Storage conditions

Observe the following notes for storage:
- Store in the original packaging to ensure protection from shock.
- Do not remove protective covers or protective caps installed on process connections. They prevent mechanical damage to the sealing surfaces and contamination in the measuring tube.
- Protect from direct sunlight to avoid unacceptably high surface temperatures.
- Select a storage location where moisture cannot collect in the measuring device as fungus and bacteria infestation can damage the lining.
- Store in a dry and dust-free place.
- Do not store outdoors.

Storage temperature→ 📄 117

5.2 Transporting the product

Transport the measuring device to the measuring point in the original packaging.

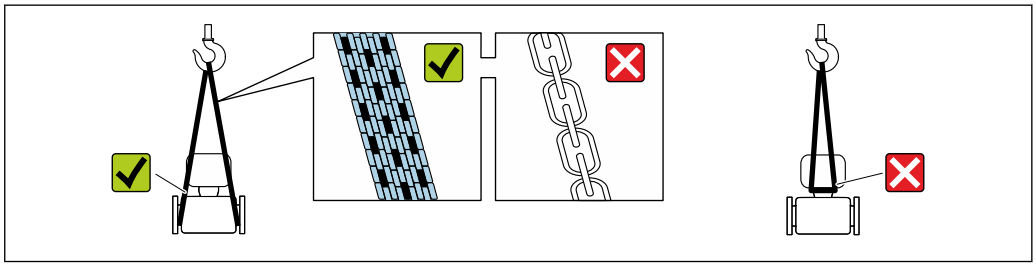

A0029252

Do not remove protective covers or caps installed on process connections. They prevent mechanical damage to the sealing surfaces and contamination in the measuring tube.

5.2.1 Measuring devices without lifting lugs

WARNING

Center of gravity of the measuring device is higher than the suspension points of the webbing slings.

Risk of injury if the measuring device slips.
- Secure the measuring device against slipping or turning.
- Observe the weight specified on the packaging (stick-on label).

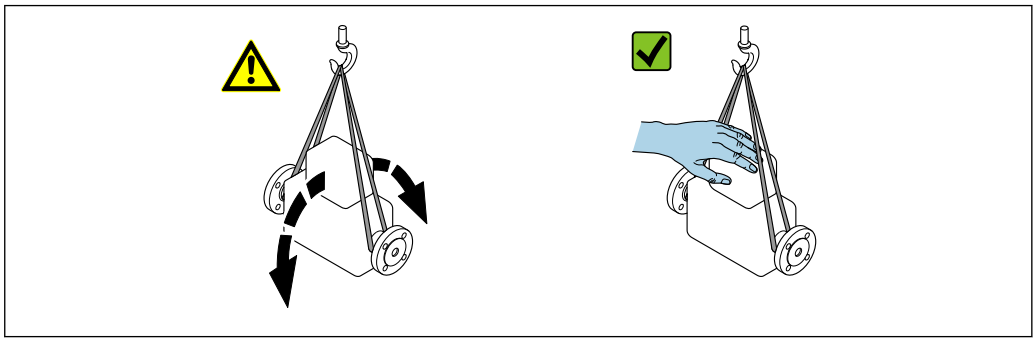

A0029214

5.2.2 Measuring devices with lifting lugs

⚠ CAUTION

Special transportation instructions for devices with lifting lugs

- ▶ Only use the lifting lugs fitted on the device or flanges to transport the device.
- ▶ The device must always be secured at two lifting lugs at least.

5.2.3 Transporting with a fork lift

If transporting in wood crates, the floor structure enables the crates to be lifted lengthwise or at both sides using a forklift.

⚠ CAUTION

Risk of damaging the magnetic coil

- ▶ If transporting by forklift, do not lift the sensor by the metal casing.
- ▶ This would buckle the casing and damage the internal magnetic coils.

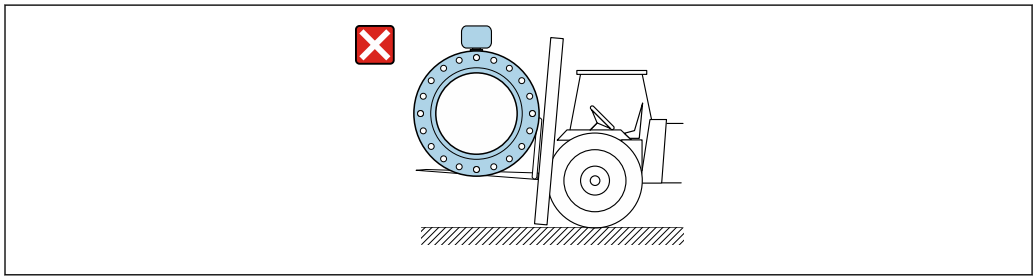

A0029319

5.3 Packaging disposal

All packaging materials are environmentally friendly and 100% recyclable:

- Measuring device secondary packaging: polymer stretch film that conforms to EC Directive 2002/95/EC (RoHS).
- Packaging:
  - Wood crate, treated in accordance with ISPM 15 standard, which is confirmed by the affixed IPPC logo.
    or
  - Carton in accordance with European Packaging Directive 94/62EC; recyclability is confirmed by the affixed RESY symbol.
- Seaworthy packaging (optional): Wood crate, treated in accordance with ISPM 15 standard, which is confirmed by the affixed IPPC logo.
- Carrying and mounting hardware:
  - Disposable plastic pallet
  - Plastic straps
  - Plastic adhesive strips
- Dunnage: Paper cushion

6 Installation

6.1 Installation conditions

6.1.1 Mounting position

Mounting location

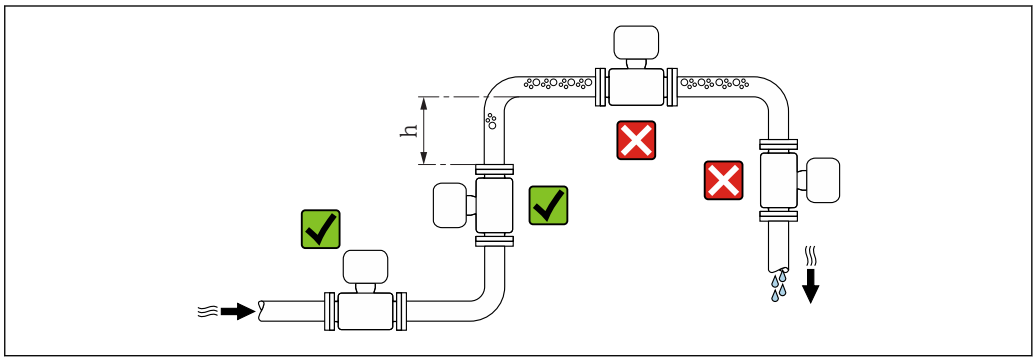

A0029343

Preferably install the sensor in an ascending pipe, and ensure a sufficient distance to the next pipe elbow: h ≥ 2 × DN

Installation in down pipes

Install a siphon with a vent valve downstream of the sensor in down pipes whose length h ≥ 5 m (16.4 ft). This precaution is to avoid low pressure and the consequent risk of damage to the measuring tube. This measure also prevents the system losing prime.

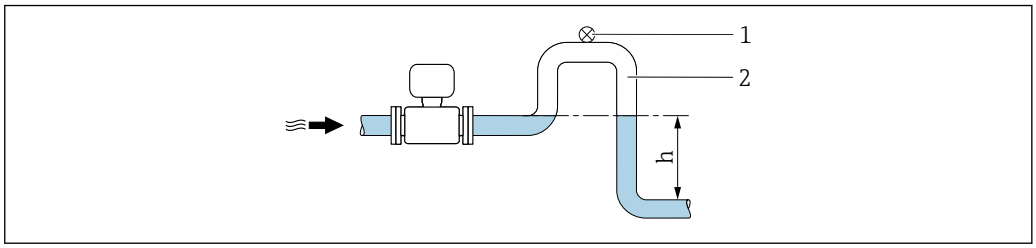

A0028981

4 *Installation in a down pipe*

1 *Vent valve*
2 *Pipe siphon*
h *Length of down pipe*

Installation in partially filled pipes

A partially filled pipe with a gradient necessitates a drain-type configuration.

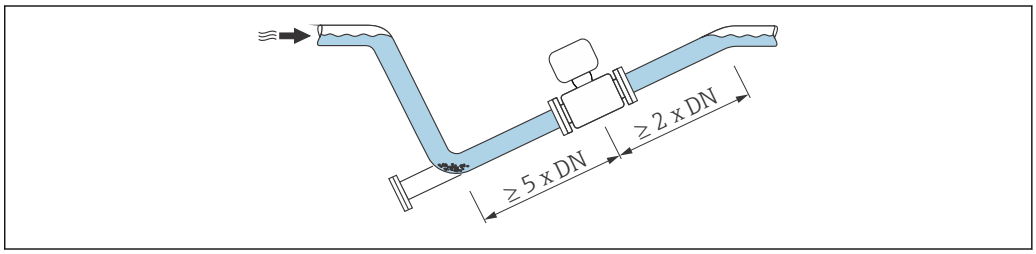

A0029257

Orientation

The direction of the arrow on the sensor nameplate helps you to install the sensor according to the flow direction (direction of medium flow through the piping).

Orientation			Recommendation
A	Vertical orientation	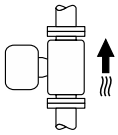 A0015591	✓✓
B	Horizontal orientation, transmitter at top	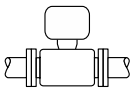 A0015589	✓✓ 1)
C	Horizontal orientation, transmitter at bottom	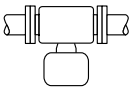 A0015590	✓✓ 2) 3)
D	Horizontal orientation, transmitter at side	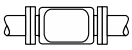 A0015592	✗

1) Applications with low process temperatures may decrease the ambient temperature. To maintain the minimum ambient temperature for the transmitter, this orientation is recommended.
2) Applications with high process temperatures may increase the ambient temperature. To maintain the maximum ambient temperature for the transmitter, this orientation is recommended.
3) To prevent the electronics module from overheating in the case of a sharp rise in temperature (e.g. CIP- or SIP processes), install the device with the transmitter component pointing downwards.

Horizontal

- Ideally, the measuring electrode plane should be horizontal. This prevents brief insulation of the two measuring electrodes by entrained air bubbles.
- Empty pipe detection only works if the transmitter housing is pointing upwards as otherwise there is no guarantee that the empty pipe detection function will actually respond to a partially filled or empty measuring tube.

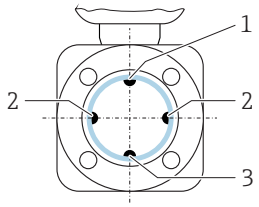

A0029344

1 EPD electrode for empty pipe detection
2 Measuring electrodes for signal detection
3 Reference electrode for potential equalization

Inlet and outlet runs

If possible, install the sensor upstream from fittings such as valves, T-pieces or elbows.

Observe the following inlet and outlet runs to comply with accuracy specifications:

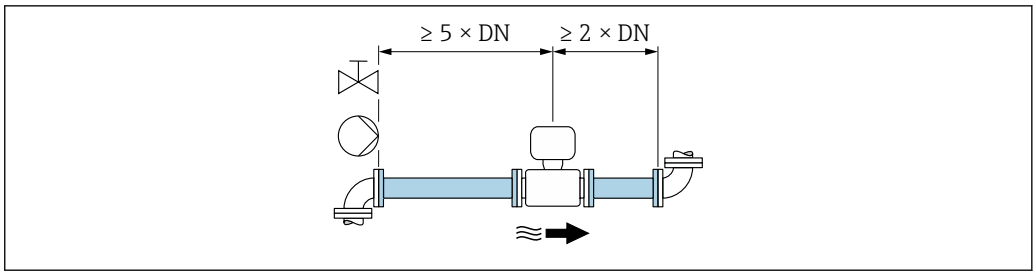

5 *Order code for "Design", option A "Insertion length short, ISO/DVGW until DN400, DN450-2000 1:1" and order code for "Design", option B "Insertion length long, ISO/DVGW until DN400, DN450-2000 1:1.3"*

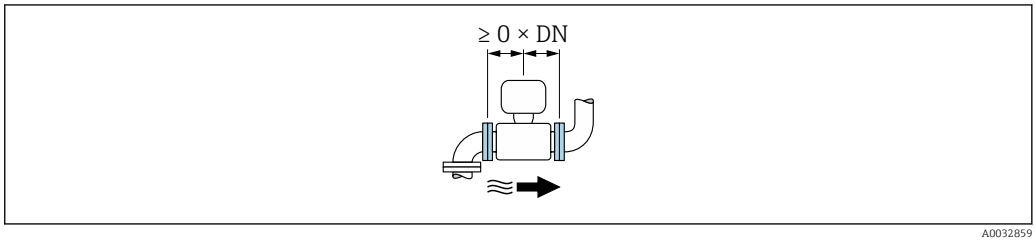

6 *Order code for "Design", option C "Insertion length short ISO/DVGW until DN300, w/o inlet and outlet runs, constricted meas.tube"*

Installation dimensions

For the dimensions and installation lengths of the device, see the "Technical Information" document, "Mechanical construction" section.

6.1.2 Requirements from environment and process

Ambient temperature range

Transmitter	−40 to +60 °C (−40 to +140 °F)
Local display	−20 to +60 °C (−4 to +140 °F), the readability of the display may be impaired at temperatures outside the temperature range.
Sensor	Process connection material, carbon steel: −10 to +60 °C (+14 to +140 °F)
Liner	Do not exceed or fall below the permitted temperature range of the liner .

If operating outdoors:
- Install the measuring device in a shady location.
- Avoid direct sunlight, particularly in warm climatic regions.
- Avoid direct exposure to weather conditions.

System pressure

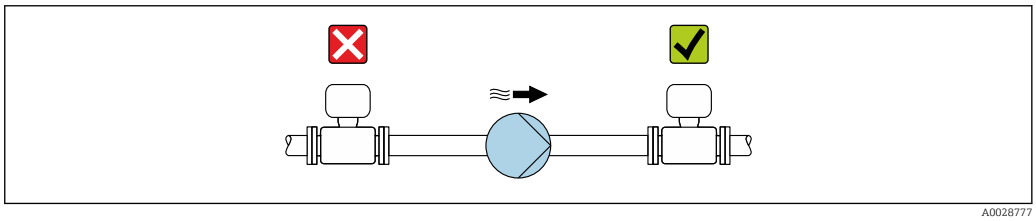

Never install the sensor on the pump suction side in order to avoid the risk of low pressure, and thus damage to the liner.

Furthermore, install pulse dampers if reciprocating, diaphragm or peristaltic pumps are used.

- Information on the liner's resistance to partial vacuum → 119
- Information on the shock resistance of the measuring system → 118
- Information on the vibration resistance of the measuring system → 118

Vibrations

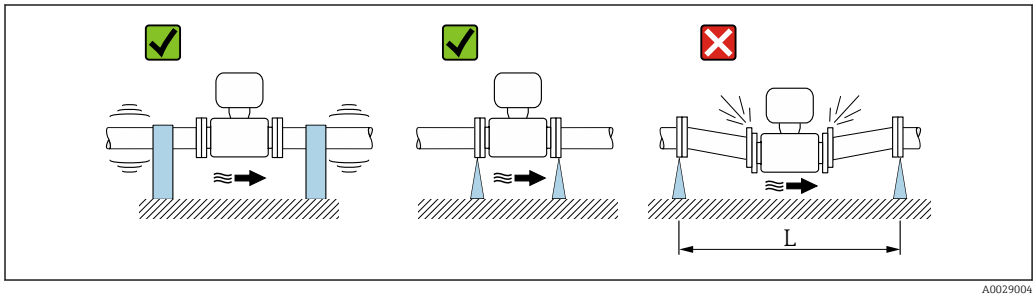

7 *Measures to avoid device vibrations (L > 10 m (33 ft))*

In the event of very strong vibrations, the pipe and sensor must be supported and fixed.

- Information on the shock resistance of the measuring system → 118
- Information on the vibration resistance of the measuring system → 118

Adapters

Suitable adapters to DIN EN 545 (double-flange reducers) can be used to install the sensor in larger-diameter pipes. The resultant increase in the rate of flow improves measuring accuracy with very slow-moving fluids. The nomogram shown here can be used to calculate the pressure loss caused by reducers and expanders.

The nomogram only applies to liquids with a viscosity similar to that of water.

1. Calculate the ratio of the diameters d/D.
2. From the nomogram read off the pressure loss as a function of flow velocity (downstream from the reduction) and the d/D ratio.

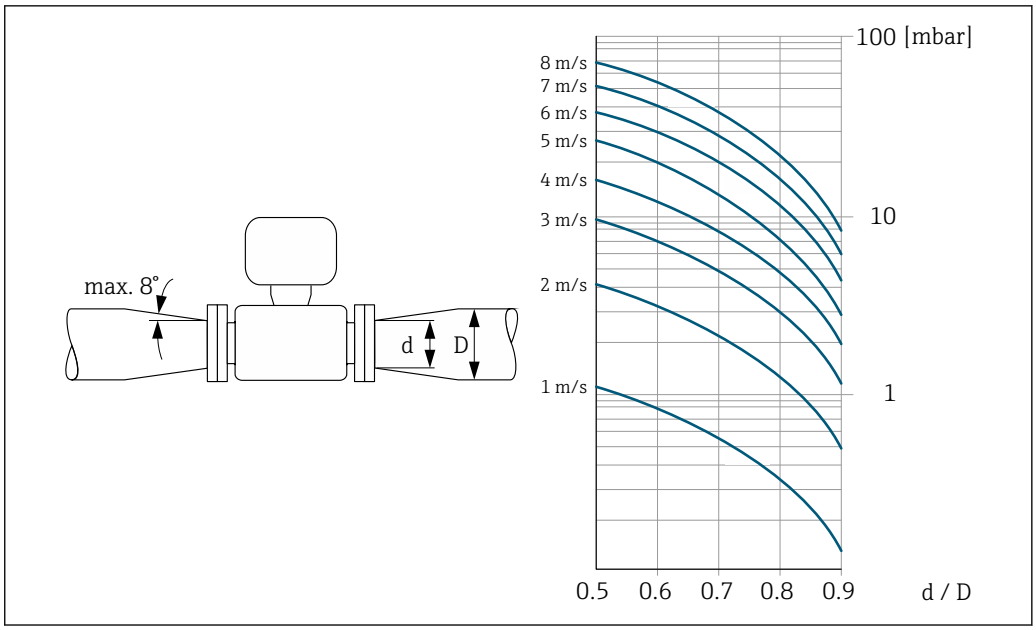

6.2 Mounting the measuring device

6.2.1 Required tools

For sensor

For flanges and other process connections: Corresponding mounting tools

6.2.2 Preparing the measuring device

1. Remove all remaining transport packaging.
2. Remove any protective covers or protective caps present from the sensor.
3. Remove stick-on label on the electronics compartment cover.

6.2.3 Mounting the sensor

WARNING

Danger due to improper process sealing!

- Ensure that the inside diameters of the gaskets are greater than or equal to that of the process connections and piping.
- Ensure that the gaskets are clean and undamaged.
- Install the gaskets correctly.

1. Ensure that the direction of the arrow on the sensor matches the flow direction of the medium.
2. To ensure compliance with device specifications, install the measuring device between the pipe flanges in a way that it is centered in the measurement section.
3. If using ground disks, comply with the Installation Instructions provided.
4. Observe required screw tightening torques → 24.

5. Install the measuring device or turn the transmitter housing so that the cable entries do not point upwards.

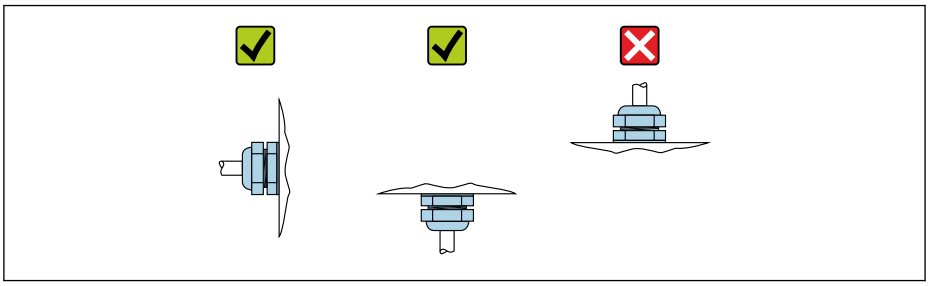

A0029263

Mounting the seals

⚠ CAUTION

An electrically conductive layer could form on the inside of the measuring tube!
Risk of measuring signal short circuit.
- ▶ Do not use electrically conductive sealing compounds such as graphite.

Comply with the following instructions when installing seals:

1. When mounting the process connections, make sure that the seals concerned are clean and centered correctly.
2. For DIN flanges: only use seals according to DIN EN 1514-1.
3. For "PTFE" lining: generally additional seals are **not** required.

Mounting the ground cable/ground disks

Comply with the information on potential equalization and detailed mounting instructions for the use of ground cables/ground disks .

Screw tightening torques

Please note the following:
- The screw tightening torques listed below apply only to lubricated threads and to pipes not subjected to tensile stress.
- Tighten the screws uniformly and in diagonally opposite sequence.
- Overtightening the screws will deform the sealing faces or damage the seals.

Screw tightening torques for EN 1092-1 (DIN 2501), PN 10/16/25/40

Nominal diameter	Pressure rating	Screws	Flange thickness	Max. screw tightening torque [Nm]	
[mm]	[bar]	[mm]	[mm]	PTFE	PFA
15	PN 40	4 × M12	16	11	–
25	PN 40	4 × M12	18	26	20
32	PN 40	4 × M16	18	41	35
40	PN 40	4 × M16	18	52	47
50	PN 40	4 × M16	20	65	59
65 [1)]	PN 16	8 × M16	18	43	40
65	PN 40	8 × M16	22	43	40
80	PN 16	8 × M16	20	53	48
80	PN 40	8 × M16	24	53	48
100	PN 16	8 × M16	20	57	51
100	PN 40	8 × M20	24	78	70

Nominal diameter [mm]	Pressure rating [bar]	Screws [mm]	Flange thickness [mm]	Max. screw tightening torque [Nm]	
				PTFE	PFA
125	PN 16	8 × M16	22	75	67
125	PN 40	8 × M24	26	111	99
150	PN 16	8 × M20	22	99	85
150	PN 40	8 × M24	28	136	120
200	PN 10	8 × M20	24	141	101
200	PN 16	12 × M20	24	94	67
200	PN 25	12 × M24	30	138	105
250	PN 10	12 × M20	26	110	–
250	PN 16	12 × M24	26	131	–
250	PN 25	12 × M27	32	200	–
300	PN 10	12 × M20	26	125	–
300	PN 16	12 × M24	28	179	–
300	PN 25	16 × M27	34	204	–
350	PN 10	16 × M20	26	188	–
350	PN 16	16 × M24	30	254	–
350	PN 25	16 × M30	38	380	–
400	PN 10	16 × M24	26	260	–
400	PN 16	16 × M27	32	330	–
400	PN 25	16 × M33	40	488	–
450	PN 10	20 × M24	28	235	–
450	PN 16	20 × M27	40	300	–
450	PN 25	20 × M33	46	385	–
500	PN 10	20 × M24	28	265	–
500	PN 16	20 × M30	34	448	–
500	PN 25	20 × M33	48	533	–
600	PN 10	20 × M27	28	345	–
600 [1)]	PN 16	20 × M33	36	658	–
600	PN 25	20 × M36	58	731	–

1) Designed acc. to EN 1092-1 (not to DIN 2501)

Screw tightening torques for EN 1092-1 (DIN 2501), PN 10/16/25, P245GH/stainless; calculated according to EN 1591-1:2014 for flanges as per EN 1092-1:2013

Nominal diameter [mm]	Pressure rating [bar]	Screws [mm]	Flange thickness [mm]	Nom. screw tightening torque [Nm]
				PTFE
350	PN 10	16 × M20	26	60
350	PN 16	16 × M24	30	115
350	PN 25	16 × M30	38	220
400	PN 10	16 × M24	26	90
400	PN 16	16 × M27	32	155
400	PN 25	16 × M33	40	290

Nominal diameter [mm]	Pressure rating [bar]	Screws [mm]	Flange thickness [mm]	Nom. screw tightening torque [Nm] PTFE
450	PN 10	20 × M24	28	90
450	PN 16	20 × M27	34	155
450	PN 25	20 × M33	46	290
500	PN 10	20 × M24	28	100
500	PN 16	20 × M30	36	205
500	PN 25	20 × M33	48	345
600	PN 10	20 × M27	30	150
600	PN 16	20 × M33	40	310
600	PN 25	20 × M36	48	500

Screw tightening torques for ASME B16.5, Class 150/300

Nominal diameter		Pressure rating	Screws	Max. screw tightening torque [Nm] ([lbf · ft])	
[mm]	[in]	[psi]	[in]	PTFE	PFA
15	½	Class 150	4 × ½	6 (4)	– (–)
15	½	Class 300	4 × ½	6 (4)	– (–)
25	1	Class 150	4 × ½	11 (8)	10 (7)
25	1	Class 300	4 × 5/8	14 (10)	12 (9)
40	1 ½	Class 150	4 × ½	24 (18)	21 (15)
40	1 ½	Class 300	4 × ¾	34 (25)	31 (23)
50	2	Class 150	4 × 5/8	47 (35)	44 (32)
50	2	Class 300	8 × 5/8	23 (17)	22 (16)
80	3	Class 150	4 × 5/8	79 (58)	67 (49)
80	3	Class 300	8 × ¾	47 (35)	42 (31)
100	4	Class 150	8 × 5/8	56 (41)	50 (37)
100	4	Class 300	8 × ¾	67 (49)	59 (44)
150	6	Class 150	8 × ¾	106 (78)	86 (63)
150	6	Class 300	12 × ¾	73 (54)	67 (49)
200	8	Class 150	8 × ¾	143 (105)	109 (80)
250	10	Class 150	12 × 7/8	135 (100)	– (–)
300	12	Class 150	12 × 7/8	178 (131)	– (–)
350	14	Class 150	12 × 1	260 (192)	– (–)
400	16	Class 150	16 × 1	246 (181)	– (–)
450	18	Class 150	16 × 1 1/8	371 (274)	– (–)
500	20	Class 150	20 × 1 1/8	341 (252)	– (–)
600	24	Class 150	20 × 1 ¼	477 (352)	– (–)

Screw tightening torques for JIS B2220, 10/20K

Nominal diameter [mm]	Pressure rating [bar]	Screws [mm]	Max. screw tightening torque [Nm]	
			PTFE	PFA
25	10K	4 × M16	32	27
25	20K	4 × M16	32	27
32	10K	4 × M16	38	–
32	20K	4 × M16	38	–
40	10K	4 × M16	41	37
40	20K	4 × M16	41	37
50	10K	4 × M16	54	46
50	20K	8 × M16	27	23
65	10K	4 × M16	74	63
65	20K	8 × M16	37	31
80	10K	8 × M16	38	32
80	20K	8 × M20	57	46
100	10K	8 × M16	47	38
100	20K	8 × M20	75	58
125	10K	8 × M20	80	66
125	20K	8 × M22	121	103
150	10K	8 × M20	99	81
150	20K	12 × M22	108	72
200	10K	12 × M20	82	54
200	20K	12 × M22	121	88
250	10K	12 × M22	133	–
250	20K	12 × M24	212	–
300	10K	16 × M22	99	–
300	20K	16 × M24	183	–

Screw tightening torques for JIS B2220, 10/20K

Nominal diameter [mm]	Pressure rating [bar]	Screws [mm]	Nom. screw tightening torque [Nm]	
			PUR	HG
350	10K	16 × M22	109	109
350	20K	16 × M30×3	217	217
400	10K	16 × M24	163	163
400	20K	16 × M30×3	258	258
450	10K	16 × M24	155	155
450	20K	16 × M30×3	272	272
500	10K	16 × M24	183	183
500	20K	16 × M30×3	315	315
600	10K	16 × M30	235	235
600	20K	16 × M36×3	381	381
700	10K	16 × M30	300	300
750	10K	16 × M30	339	339

Screw tightening torques for AS 2129, Table E

Nominal diameter [mm]	Screws [mm]	Max. screw tightening torque [Nm] PTFE
25	4 × M12	21
50	4 × M16	42

Screw tightening torques for AS 4087, PN 16

Nominal diameter [mm]	Screws [mm]	Max. screw tightening torque [Nm] PTFE
50	4 × M16	42

6.2.4 Turning the display module

The local display is only available with the following device version:
Order code for "Display; Operation", option **B**: 4-line; lit, via communication

The display module can be turned to optimize display readability.

Aluminum housing version, AlSi10Mg, coated

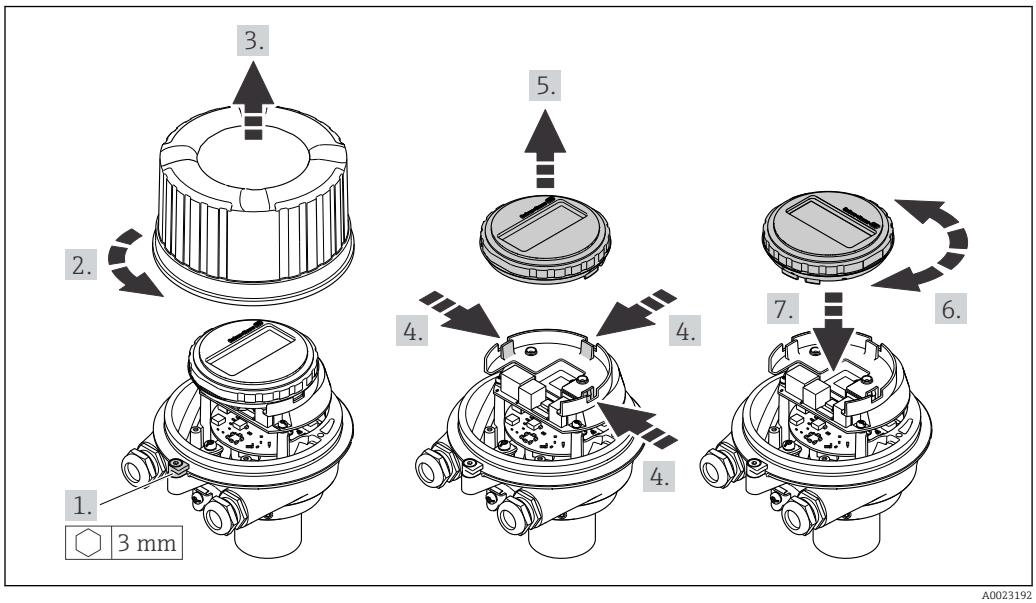

A0023192

6.3 Post-installation check

Is the device undamaged (visual inspection)?	❑
Does the measuring device conform to the measuring point specifications? For example: ▪ Process temperature ▪ Process pressure (refer to the section on "Pressure-temperature ratings" in the "Technical Information" document) ▪ Ambient temperature ▪ Measuring range	❑

Has the correct orientation for the sensor been selected ? ▪ According to sensor type ▪ According to medium temperature ▪ According to medium properties (outgassing, with entrained solids)	❑
Does the arrow on the sensor nameplate match the direction of flow of the fluid through the piping ?	❑
Are the measuring point identification and labeling correct (visual inspection)?	❑
Is the device adequately protected from precipitation and direct sunlight?	❑
Have the fixing screws been tightened with the correct tightening torque?	❑

7 Electrical connection

NOTICE

The measuring device does not have an internal circuit breaker.

- ▶ For this reason, assign the measuring device a switch or power-circuit breaker so that the power supply line can be easily disconnected from the mains.
- ▶ Although the measuring device is equipped with a fuse, additional overcurrent protection (maximum 16 A) should be integrated into the system installation.

7.1 Connection conditions

7.1.1 Required tools

- For cable entries: Use corresponding tools
- For securing clamp (on aluminum housing): Allen screw3 mm
- For securing screw (for stainless steel housing): open-ended wrench 8 mm
- Wire stripper
- When using stranded cables: crimper for wire end ferrule

7.1.2 Requirements for connecting cable

The connecting cables provided by the customer must fulfill the following requirements.

Electrical safety

In accordance with applicable federal/national regulations.

Permitted temperature range

- The installation guidelines that apply in the country of installation must be observed.
- The cables must be suitable for the minimum and maximum temperatures to be expected.

Power supply cable

Standard installation cable is sufficient.

Signal cable

Current output 4 to 20 mA HART

A shielded cable is recommended. Observe grounding concept of the plant.

Pulse/frequency/switch output

Standard installation cable is sufficient.

Cable diameter

- Cable glands supplied:
  M20 × 1.5 with cable Ø 6 to 12 mm (0.24 to 0.47 in)
- Spring terminals:
  Wire cross-sections 0.5 to 2.5 mm^2 (20 to 14 AWG)

7.1.3 Terminal assignment

Transmitter

Connection version 4-20 mA HART with pulse/frequency/switch output

Order code for "Output", option **B**

Depending on the housing version, the transmitters can be ordered with terminals or device plugs.

Order code "Housing"	Connection methods available		Possible options for order code "Electrical connection"
	Outputs	Power supply	
Option **A**	Terminals	Terminals	▪ Option **A**: coupling M20x1 ▪ Option **B**: thread M20x1 ▪ Option **C**: thread G ½" ▪ Option **D**: thread NPT ½"
Option **A**	Device plugs → 📄 32	Terminals	▪ Option **L**: plug M12x1 + thread NPT ½" ▪ Option **N**: plug M12x1 + coupling M20 ▪ Option **P**: plug M12x1 + thread G ½" ▪ Option **U**: plug M12x1 + thread M20
Option **A**	Device plugs → 📄 32	Device plugs → 📄 32	Option **Q**: 2 x plug M12x1
Order code for "Housing": Option **A**: compact, coated aluminum			

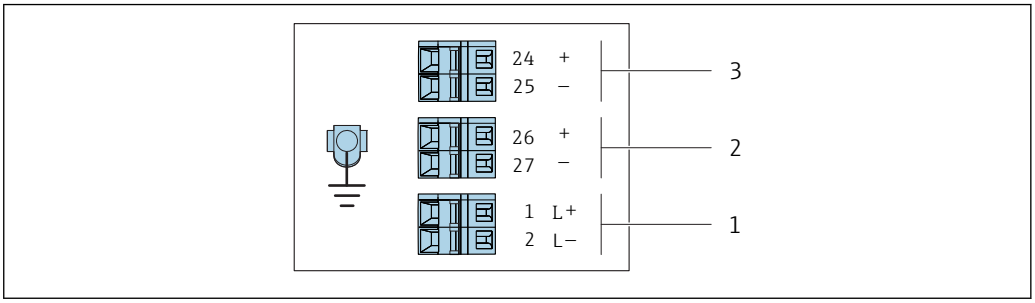

8 Terminal assignment 4-20 mA HART with pulse/frequency/switch output

1 *Power supply: DC 24 V*
2 *Output 1: 4-20 mA HART (active)*
3 *Output 2: pulse/frequency/switch output (passive)*

Order code "Output"	Terminal number					
	Power supply		Output 1		Output 2	
	2 (L-)	1 (L+)	27 (–)	26 (+)	25 (–)	24 (+)
Option **B**	DC 24 V		4-20 mA HART (active)		Pulse/frequency/switch output (passive)	
Order code for "Output": Option **B**: 4-20 mA HART with pulse/frequency/switch output						

7.1.4 Pin assignment, device plug

Supply voltage

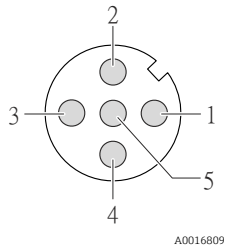

Pin		Assignment
1	L+	DC 24 V
2		Not assigned
3		Not assigned
4	L-	DC 24 V
5		Grounding/shielding
Coding		**Plug/socket**
A		Plug

Device plug for signal transmission (device side)

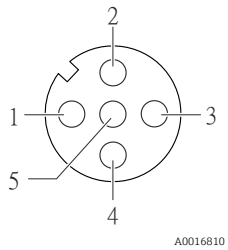

Pin		Assignment
1	+	4-20 mA HART (active)
2	-	4-20 mA HART (active)
3	+	Pulse/frequency/switch output (passive)
4	-	Pulse/frequency/switch output (passive)
5		Grounding/shielding
Coding		**Plug/socket**
A		Socket

7.1.5 Preparing the measuring device

NOTICE

Insufficient sealing of the housing!

Operational reliability of the measuring device could be compromised.

- Use suitable cable glands corresponding to the degree of protection.

1. Remove dummy plug if present.
2. If the measuring device is supplied without cable glands:
   Provide suitable cable gland for corresponding connecting cable.
3. If the measuring device is supplied with cable glands:
   Observe requirements for connecting cables → 📄 30.

7.2 Connecting the measuring device

NOTICE

Limitation of electrical safety due to incorrect connection!

- Have electrical connection work carried out by appropriately trained specialists only.
- Observe applicable federal/national installation codes and regulations.
- Comply with local workplace safety regulations.
- Always connect the protective ground cable ⏚ before connecting additional cables.
- For use in potentially explosive atmospheres, observe the information in the device-specific Ex documentation.
- The power unit must be tested to ensure it meets safety requirements (e.g. PELV, SELV).

7.2.1 Connecting the transmitter

The connection of the transmitter depends on the following order codes:
- Housing version: compact or ultra-compact
- Connection version: device plug or terminals

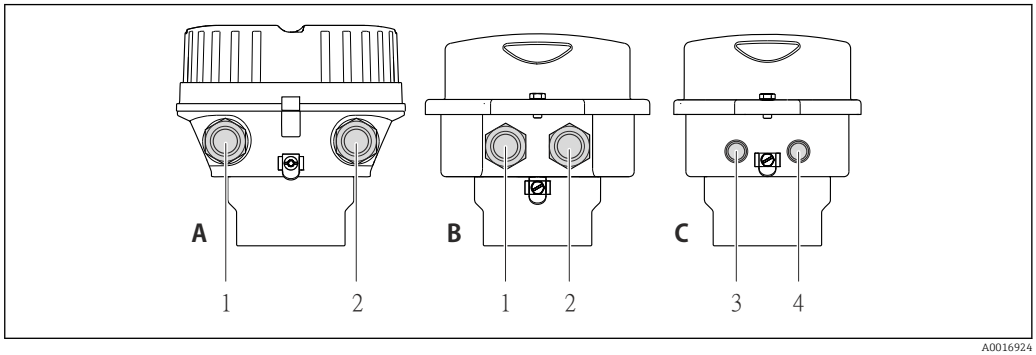

9 Housing versions and connection versions

A Compact, coated aluminum
B Compact hygienic, stainless or compact, stainless
1 Cable entry or device plug for signal transmission
2 Cable entry or device plug for supply voltage
C Ultra-compact hygienic, stainless or ultra-compact, stainless
3 Device plug for signal transmission
4 Device plug for supply voltage

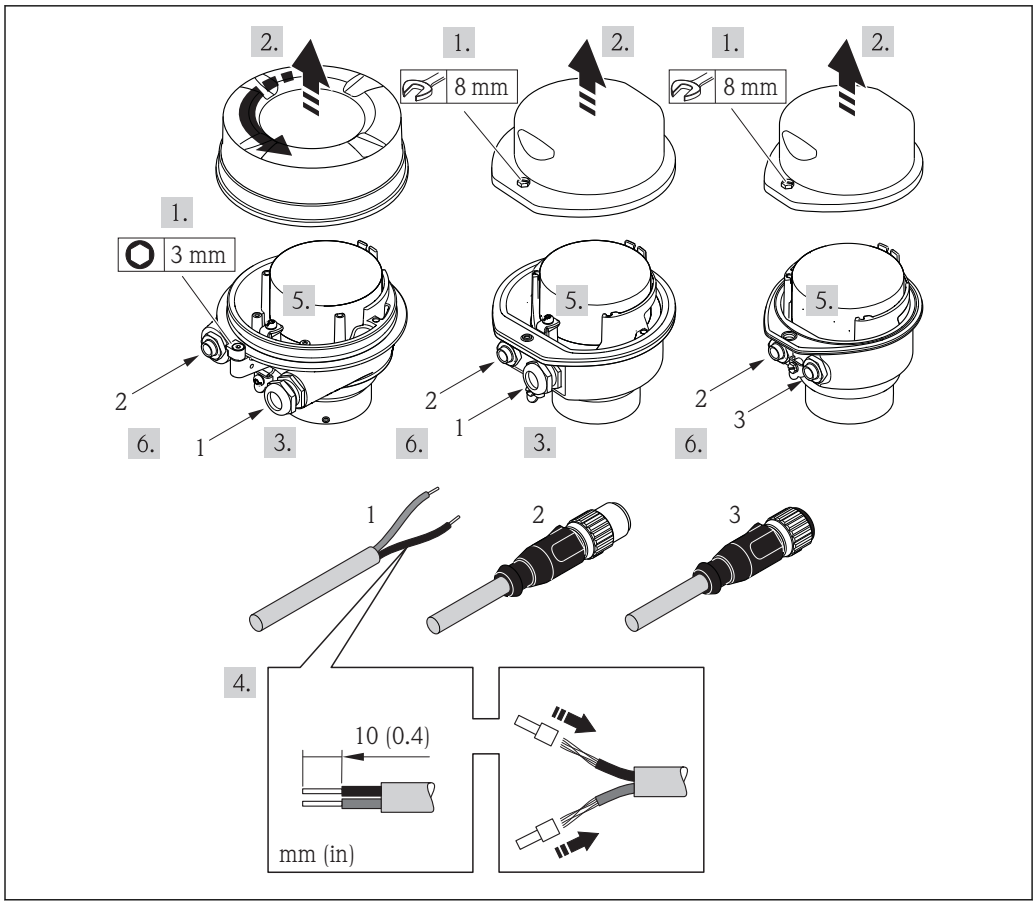

10 *Device versions with connection examples*

1 *Cable*
2 *Device plug for signal transmission*
3 *Device plug for supply voltage*

Depending on the housing version disconnect the local display from the main electronics module: Operating Instructions for the device .

- Connect the cable in accordance with the terminal assignment or the device plug pin assignment .

7.2.2 Ensure potential equalization

Requirements

CAUTION

Electrode damage can result in the complete failure of the device!

- Same electrical potential for the medium and sensor
- Company-internal grounding concepts
- Pipe material and grounding

For devices intended for use in hazardous locations, please observe the guidelines in the Ex documentation (XA).

Connection example, standard scenario

Metal, grounded pipe

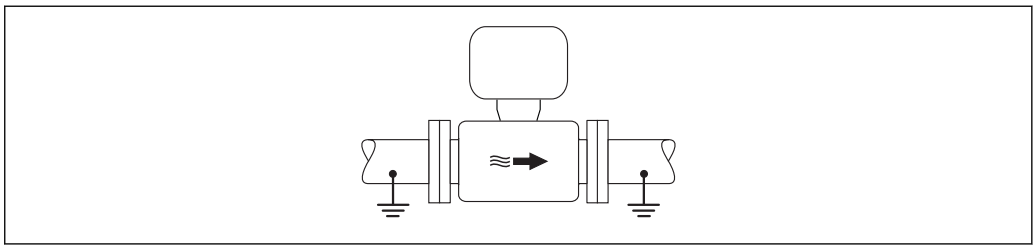

A0016315

11 *Potential equalization via measuring tube*

Connection example in special situations

Unlined and ungrounded metal pipe

This connection method also applies in situations where:
- The customary potential equalization is not used
- Equalizing currents are present

Ground cable	Copper wire, at least 6 mm² (0.0093 in²)

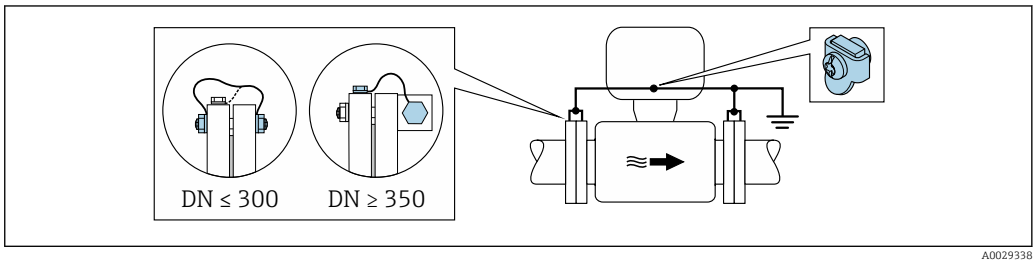

A0029338

12 *Potential equalization via ground terminal and pipe flanges*

1. Connect both sensor flanges to the pipe flange via a ground cable and ground them.
2. If DN ≤ 300 (12"): Mount the ground cable directly on the conductive flange coating of the sensor with the flange screws.
3. If DN ≥ 350 (14"): Mount the ground cable directly on the metal transport bracket. Observe screw tightening torques: see the Sensor Brief Operating Instructions.
4. Connect the connection housing of the transmitter or sensor to ground potential by means of the ground terminal provided for the purpose.

Plastic pipe or pipe with insulating liner

This connection method also applies in situations where:
- The customary potential equalization is not used
- Equalizing currents are present

Ground cable	Copper wire, at least 6 mm² (0.0093 in²)

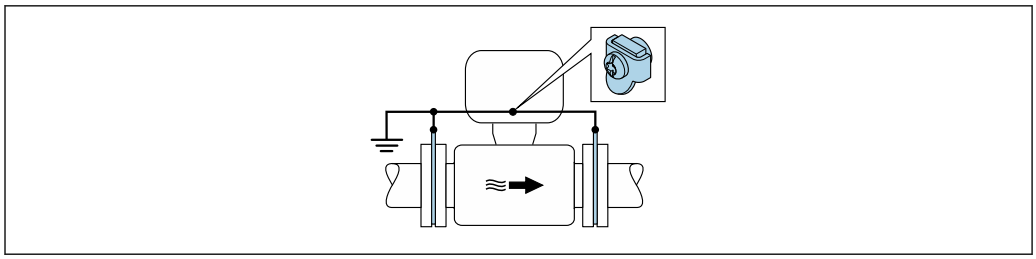

13 Potential equalization via ground terminal and ground disks

1. Connect the ground disks to the ground terminal via the ground cable.
2. Connect the ground disks to ground potential.

Pipe with a cathodic protection unit

This connection method is only used if the following two conditions are met:
- Metal pipe without liner or pipe with electrically conductive liner
- Cathodic protection is integrated in the personal protection equipment

Ground cable	Copper wire, at least 6 mm^2 (0.0093 in^2)

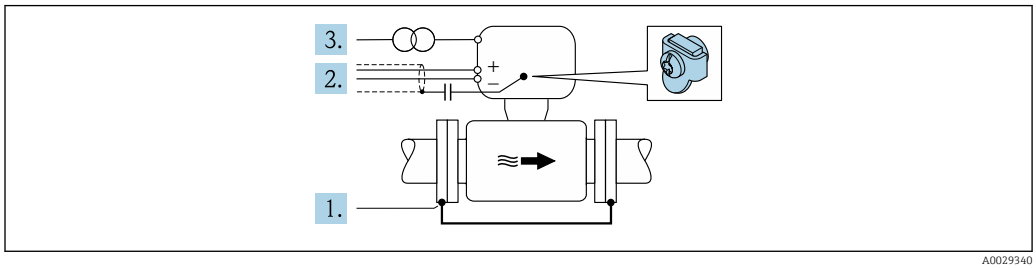

Prerequisite: The sensor is installed in the pipe in a way that provides electrical insulation.

1. Connect the two flanges of the pipe to one another via a ground cable.
2. Guide the shield of the signal lines through a capacitor.
3. Connect the measuring device to the power supply such that it is floating in relation to the protective ground (isolation transformer).

7.3 Special connection instructions

7.3.1 Connection examples

Current output 4 to 20 mA HART

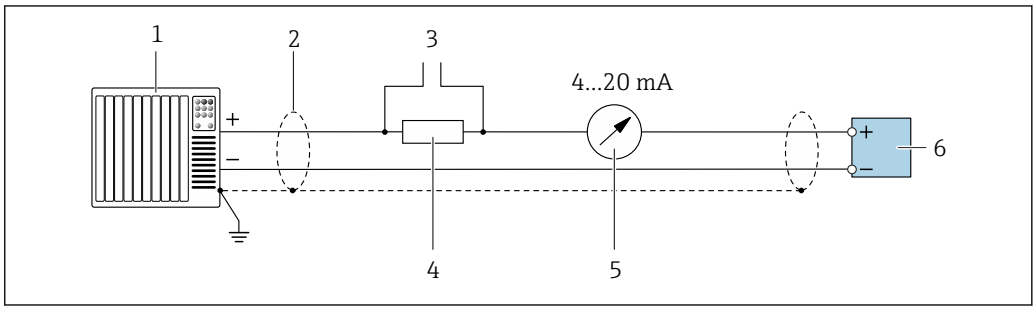

14 *Connection example for 4 to 20 mA HART current output (active)*

1 *Automation system with current input (e.g. PLC)*
2 *Cable shield: the cable shield must be grounded at both ends to comply with EMC requirements; observe cable specifications*
3 *Connection for HART operating devices → 49*
4 *Resistor for HART communication (≥ 250 Ω): observe maximum load*
5 *Analog display unit: observe maximum load*
6 *Transmitter*

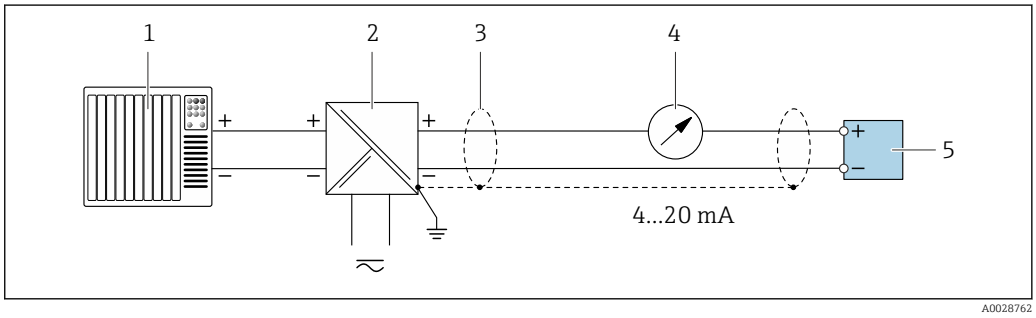

15 *Connection example for 4 to 20 mA HART current output (passive)*

1 *Automation system with current input (e.g. PLC)*
2 *Power supply*
3 *Cable shield: the cable shield must be grounded at both ends to comply with EMC requirements; observe cable specifications*
4 *Analog display unit: observe maximum load*
5 *Transmitter*

Pulse/frequency output

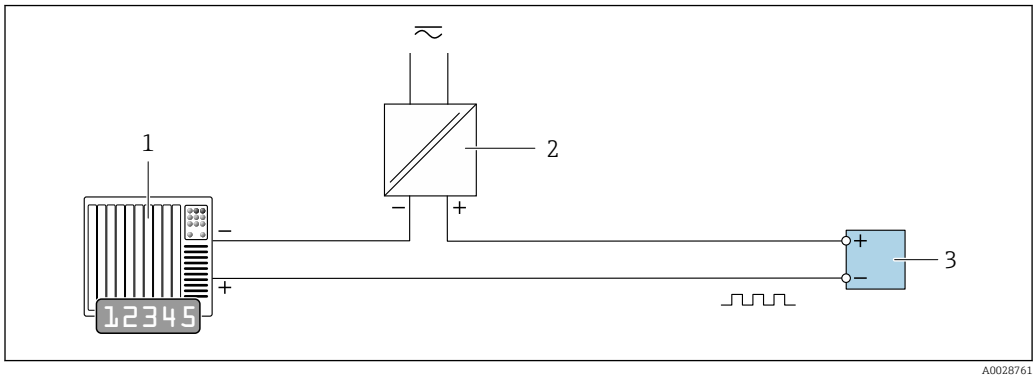

16 Connection example for pulse/frequency output (passive)

1 *Automation system with pulse/frequency input (e.g. PLC)*
2 *Power supply*
3 *Transmitter: Observe input values*

Switch output

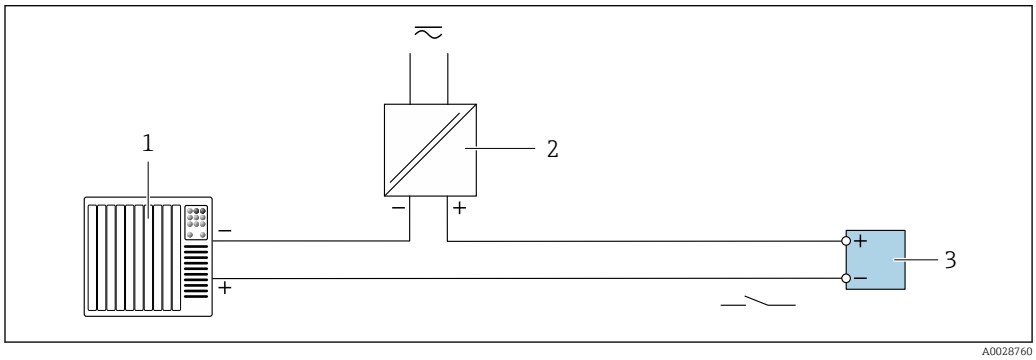

17 Connection example for switch output (passive)

1 *Automation system with switch input (e.g. PLC)*
2 *Power supply*
3 *Transmitter: Observe input values*

HART input

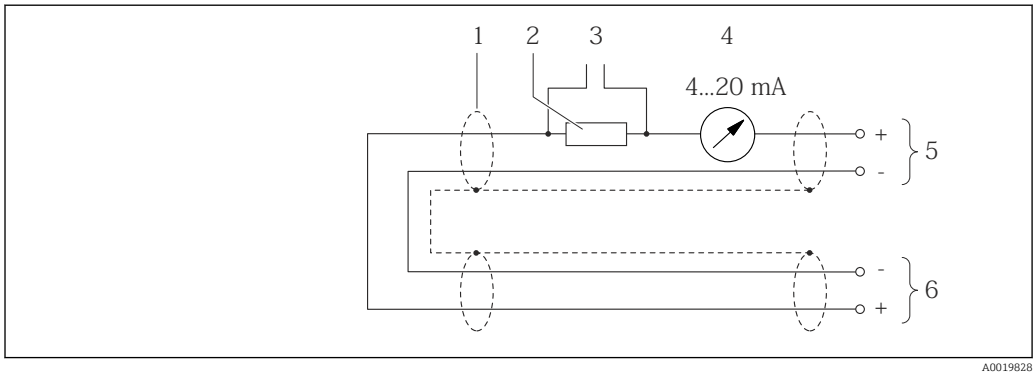

18 Connection example for HART input (burst mode) via current output (active)

1 *Cable shield, observe cable specifications*
2 *Resistor for HART communication (≥ 250 Ω): observe maximum load*
3 *Connection for HART operating devices*
4 *Analog display unit*
5 *Transmitter*
6 *Sensor for external measured variable*

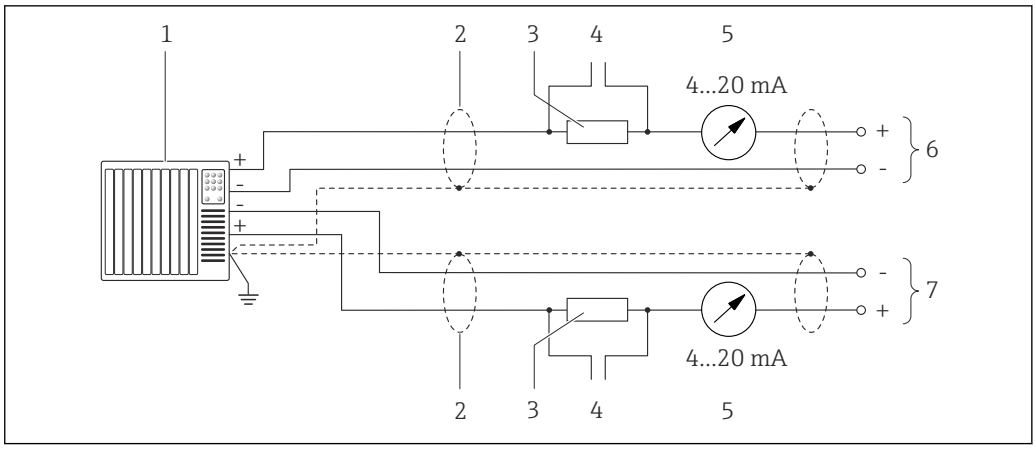

19 *Connection example for HART input (master mode) via current output (active)*

1 *Automation system with current input (e.g. PLC).*
Prerequisite: automation system with HART version 6, HART commands 113 and 114 can be processed.
2 *Cable shield, observe cable specifications*
3 *Resistor for HART communication (≥ 250 Ω): observe maximum load*
4 *Connection for HART operating devices*
5 *Analog display unit*
6 *Transmitter*
7 *Sensor for external measured variable*

7.4 Ensuring the degree of protection

The measuring device fulfills all the requirements for the IP66/67 degree of protection, Type 4X enclosure.

To guarantee IP66/67 degree of protection, Type 4X enclosure, carry out the following steps after the electrical connection:

1. Check that the housing seals are clean and fitted correctly.
2. Dry, clean or replace the seals if necessary.
3. Tighten all housing screws and screw covers.
4. Firmly tighten the cable glands.
5. To ensure that moisture does not enter the cable entry:
   Route the cable so that it loops down before the cable entry ("water trap").
   ↳

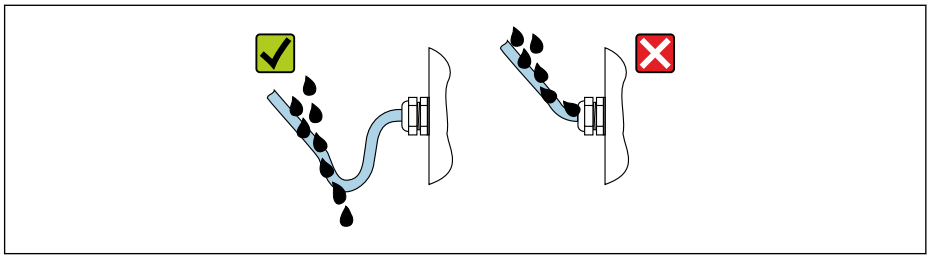

6. Insert dummy plugs into unused cable entries.

7.5 Post-connection check

Are cables or the device undamaged (visual inspection)?	❑
Do the cables used meet the requirements→ 📄 30?	❑
Do the cables have adequate strain relief?	❑

Are all the cable glands installed, firmly tightened and leak-tight? Cable run with "water trap" → 🗎 39 ?	❑
Depending on the device version: are all the device plugs firmly tightened ?	❑
Does the supply voltage match the specifications on the transmitter nameplate → 🗎 115?	❑
Is the terminal assignment → 🗎 31 or pin assignment of the connector → 🗎 32 correct?	❑
If supply voltage is present, is the power LED on the electronics module of the transmitter lit green → 🗎 12?	❑
Is the potential equalization established correctly ?	❑
Depending on the device version, is the securing clamp or fixing screw firmly tightened?	❑

8 Operation options

8.1 Overview of operating options

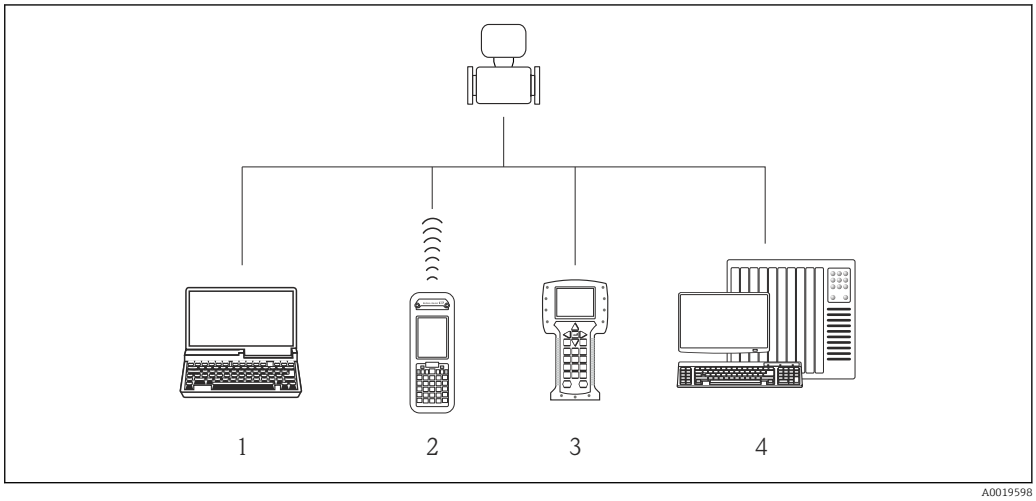

1 *Computer with Web browser (e.g. Internet Explorer) or with operating tool (e.g. FieldCare, AMS Device Manager, SIMATIC PDM)*
2 *Field Xpert SFX350 or SFX370*
3 *Field Communicator 475*
4 *Control system (e.g. PLC)*

8.2 Structure and function of the operating menu

8.2.1 Structure of the operating menu

For an overview of the operating menu for experts: "Description of Device Parameters" document supplied with the device

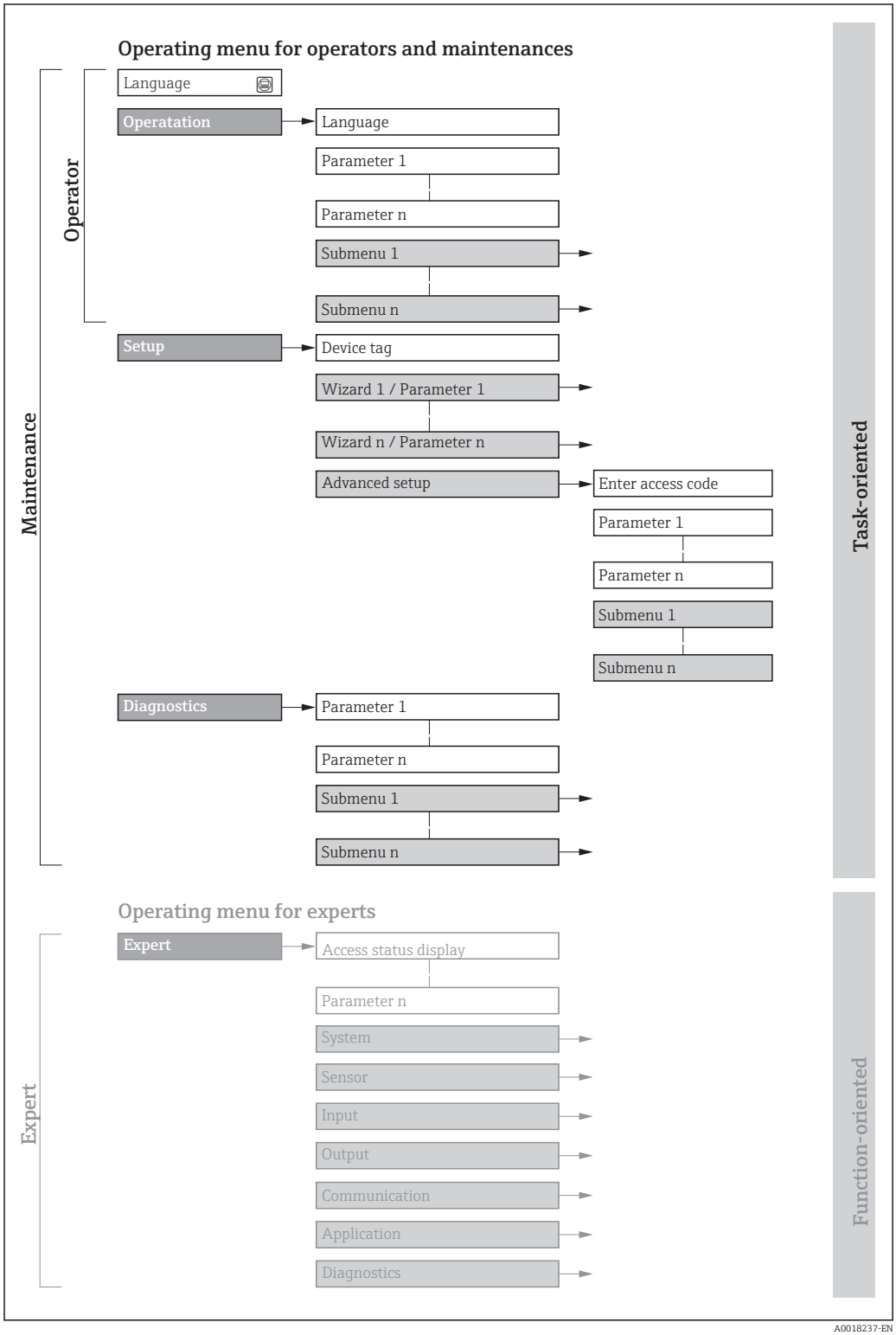

20 *Schematic structure of the operating menu*

8.2.2 Operating philosophy

The individual parts of the operating menu are assigned to certain user roles (operator, maintenance etc.). Each user role contains typical tasks within the device lifecycle.

Menu/parameter		User role and tasks	Content/meaning
Language	task-oriented	**Role "Operator", "Maintenance"** Tasks during operation: ▪ Configuring the operational display ▪ Reading measured values	▪ Defining the operating language ▪ Defining the Web server operating language ▪ Resetting and controlling totalizers
Operation			▪ Configuring the operational display (e.g. display format, display contrast) ▪ Resetting and controlling totalizers
Setup		**"Maintenance" role** Commissioning: ▪ Configuration of the measurement ▪ Configuration of the outputs	Submenus for fast commissioning: ▪ Set the system units ▪ Configure the outputs ▪ Configuring the operational display ▪ Define the output conditioning ▪ Set the low flow cut off ▪ Empty pipe detection Advanced setup ▪ For more customized configuration of the measurement (adaptation to special measuring conditions) ▪ Configuration of totalizers ▪ Configuration of electrode cleaning (optional) ▪ Configure the WLAN settings ▪ Administration (define access code, reset measuring device)
Diagnostics		**"Maintenance" role** Fault elimination: ▪ Diagnostics and elimination of process and device errors ▪ Measured value simulation	Contains all parameters for error detection and analyzing process and device errors: ▪ Diagnostic list Contains up to 5 currently pending diagnostic messages. ▪ Event logbook Contains event messages that have occurred. ▪ Device information Contains information for identifying the device. ▪ Measured values Contains all current measured values. ▪ Heartbeat The functionality of the device is checked on demand and the verification results are documented. ▪ Simulation Is used to simulate measured values or output values.
Expert	function-oriented	Tasks that require detailed knowledge of the function of the device: ▪ Commissioning measurements under difficult conditions ▪ Optimal adaptation of the measurement to difficult conditions ▪ Detailed configuration of the communication interface ▪ Error diagnostics in difficult cases	Contains all the parameters of the device and makes it possible to access these parameters directly using an access code. The structure of this menu is based on the function blocks of the device: ▪ System Contains all higher-order device parameters which do not concern the measurement or the communication interface. ▪ Sensor Configuration of the measurement. ▪ Output Configuring of the analog current outputs as well as the pulse/frequency and switch output. ▪ Communication Configuration of the digital communication interface and the Web server. ▪ Application Configure the functions that go beyond the actual measurement (e.g. totalizer). ▪ Diagnostics Error detection and analysis of process and device errors and for device simulation and Heartbeat Technology.

8.3 Access to the operating menu via the web browser

8.3.1 Function range

Thanks to the integrated Web server, the device can be operated and configured via a Web browser and via a service interface (CDI-RJ45) . In addition to the measured values, status information on the device is also displayed and allows the user to monitor the status of the device. Furthermore the device data can be managed and the network parameters can be configured.

For additional information on the Web server, refer to the Special Documentation for the device → 📄 129

8.3.2 Prerequisites

Computer hardware

Interface	The computer must have an RJ45 interface.
Connection	Standard Ethernet cable with RJ45 connector.
Screen	Recommended size: ≥12" (depends on the screen resolution)

Computer software

Recommended operating systems	Microsoft Windows 7 or higher. Microsoft Windows XP is supported.
Web browsers supported	▪ Microsoft Internet Explorer 8 or higher ▪ Microsoft Edge ▪ Mozilla Firefox ▪ Google Chrome ▪ Safari

Computer settings

User rights	Appropriate user rights (e.g. administrator rights) for TCP/IP and proxy server settings are necessary (for adjusting the IP address, subnet mask etc.).
Proxy server settings of the Web browser	The Web browser setting *Use a Proxy Server for Your LAN* must be **deselected** .
JavaScript	JavaScript must be enabled. If JavaScript cannot be enabled: enter http://XXX.XXX.X.XXX/basic.html in the address line of the Web browser, e.g. http://192.168.1.212/basic.html. A fully functional but simplified version of the operating menu structure starts in the Web browser.
Network connections	Only the active network connections to the measuring device should be used.
	Switch off all other network connections such as WLAN.

In the event of connection problems: → 📄 90

Measuring device: Via CDI-RJ45 service interface

Device	CDI-RJ45 service interface
Measuring device	The measuring device has an RJ45 interface.
Web server	Web server must be enabled; factory setting: ON For information on enabling the Web server → 📄 48

8.3.3 Establishing a connection

Via service interface (CDI-RJ45)

Preparing the measuring device

Configuring the Internet protocol of the computer

The following information refers to the default Ethernet settings of the device.

IP address of the device: 192.168.1.212 (factory setting)

1. Switch on the measuring device.
2. Connect to the computer using a cable → 📄 125.
3. If a 2nd network card is not used, close all the applications on the notebook.
   ↳ Applications requiring Internet or a network, such as e-mail, SAP applications, Internet or Windows Explorer.
4. Close any open Internet browsers.
5. Configure the properties of the Internet protocol (TCP/IP) as defined in the table:

IP address	192.168.1.XXX; for XXX all numerical sequences except: 0, 212 and 255 → e.g. 192.168.1.213
Subnet mask	255.255.255.0
Default gateway	192.168.1.212 or leave cells empty

Starting the Web browser

1. Start the Web browser on the computer.

2. Enter the IP address of the Web server in the address line of the Web browser: 192.168.1.212
   ↳ The login page appears.

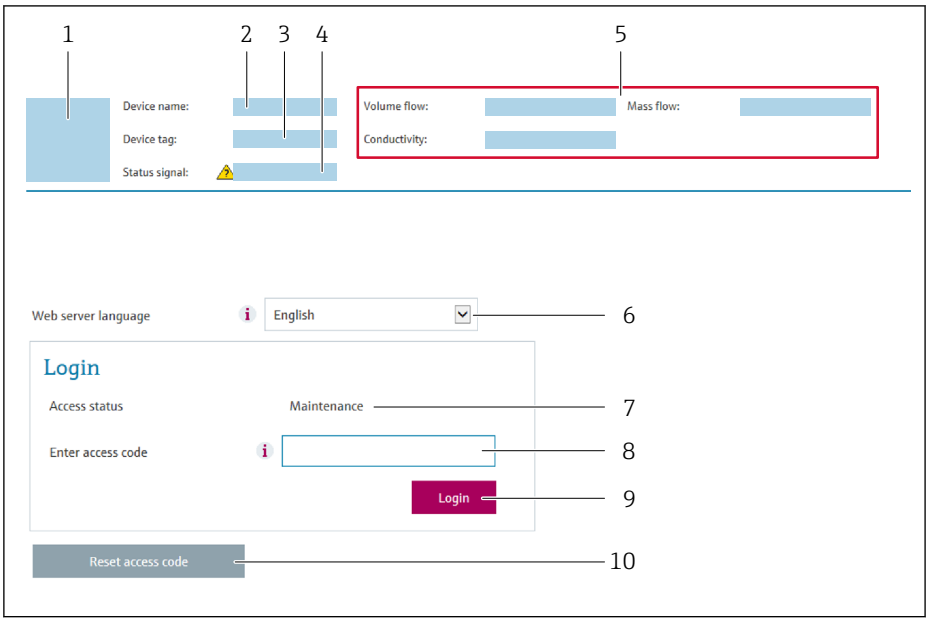

1 *Picture of device*
2 *Device name*
3 *Device tag (→ 📄 58)*
4 *Status signal*
5 *Current measured values*
6 *Operating language*
7 *User role*
8 *Access code*
9 *Login*
10 *Reset access code*

If a login page does not appear, or if the page is incomplete → 📄 90

8.3.4 Logging on

1. Select the preferred operating language for the Web browser.
2. Enter the user-specific access code.
3. Press **OK** to confirm your entry.

Access code	0000 (factory setting); can be changed by customer

If no action is performed for 10 minutes, the Web browser automatically returns to the login page.

8.3.5 User interface

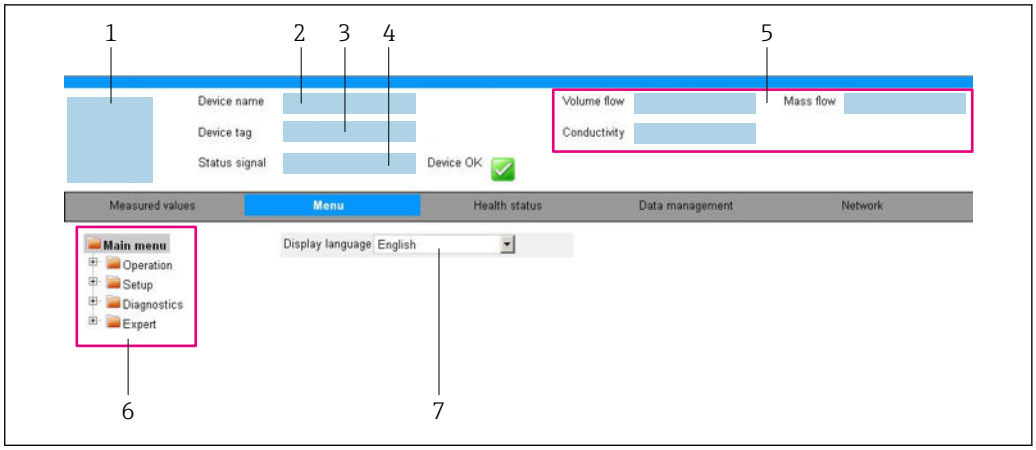

A0032879

1 *Picture of device*
2 *Device name*
3 *Device tag*
4 *Status signal*
5 *Current measured values*
6 *Navigation area*
7 *Local display language*

Header

The following information appears in the header:
- Device tag
- Device status with status signal → 📄 92
- Current measured values

Function row

Functions	Meaning
Measured values	Displays the measured values of the measuring device
Menu	▪ Access to the operating menu from the measuring device ▪ The structure of the operating menu is the same as for the operating tools For detailed information on the structure of the operating menu, see the Operating Instructions for the measuring device
Device status	Displays the diagnostic messages currently pending, listed in order of priority
Data management	Data exchange between PC and measuring device: ▪ Device configuration: – Load settings from the device (XML format, save configuration) – Save settings to the device (XML format, restore configuration) ▪ Logbook - Export Event logbook (.csv file) ▪ Documents - Export documents: – Export backup data record (.csv file, create documentation of the measuring point configuration) – Verification report (PDF file, only available with the "Heartbeat Verification" application package)
Network configuration	Configuration and checking of all the parameters required for establishing the connection to the measuring device: ▪ Network settings (e.g. IP address, MAC address) ▪ Device information (e.g. serial number, firmware version)
Logout	End the operation and call up the login page

Navigation area

If a function is selected in the function bar, the submenus of the function open in the navigation area. The user can now navigate through the menu structure.

Working area

Depending on the selected function and the related submenus, various actions can be performed in this area:
- Configuring parameters
- Reading measured values
- Calling up help text
- Starting an upload/download

8.3.6 Disabling the Web server

The Web server of the measuring device can be switched on and off as required using the **Web server functionality** parameter.

Navigation

"Expert" menu → Communication → Web server

Parameter overview with brief description

Parameter	Description	Selection	Factory setting
Web server functionality	Switch the Web server on and off.	▪ Off ▪ On	On

Function scope of the "Web server functionality" parameter

Option	Description
Off	▪ The web server is completely disabled. ▪ Port 80 is locked.
On	▪ The complete functionality of the web server is available. ▪ JavaScript is used. ▪ The password is transferred in an encrypted state. ▪ Any change to the password is also transferred in an encrypted state.

Enabling the Web server

If the Web server is disabled it can only be re-enabled with the **Web server functionality** parameter via the following operating options:
- Via Bedientool "FieldCare"
- Via "DeviceCare" operating tool

8.3.7 Logging out

Before logging out, perform a data backup via the **Data management** function (upload configuration from device) if necessary.

1. Select the **Logout** entry in the function row.
   ↳ The home page with the Login box appears.
2. Close the Web browser.
3. If no longer needed:
   Reset modified properties of the Internet protocol (TCP/IP) → 📖 45.

8.4 Access to the operating menu via the operating tool

8.4.1 Connecting the operating tool

Via HART protocol

This communication interface is available in device versions with a HART output.

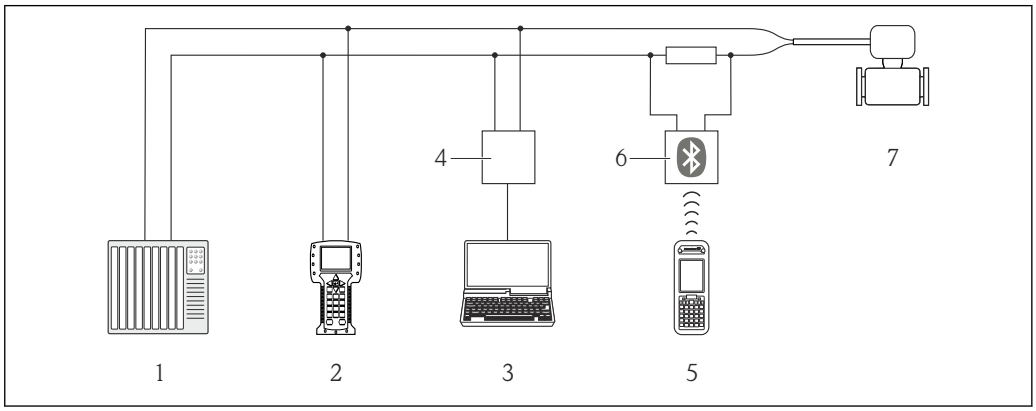

A0016948

21 Options for remote operation via HART protocol

1 *Control system (e.g. PLC)*
2 *Field Communicator 475*
3 *Computer with operating tool (e.g. FieldCare, AMS Device Manager, SIMATIC PDM)*
4 *Commubox FXA195 (USB)*
5 *Field Xpert SFX350 or SFX370*
6 *VIATOR Bluetooth modem with connecting cable*
7 *Transmitter*

Via service interface (CDI)

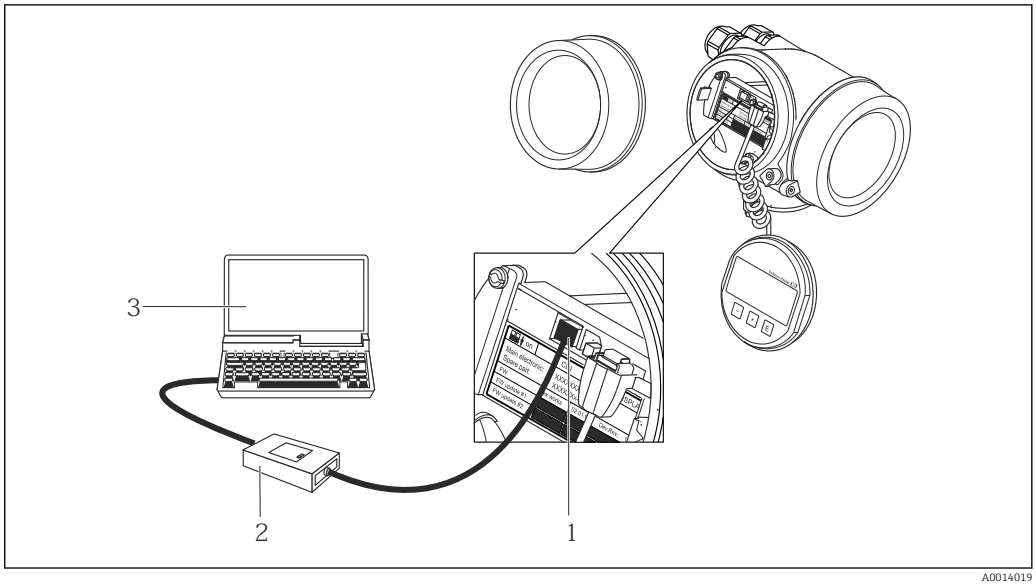

A0014019

1 *Service interface (CDI = Endress+Hauser Common Data Interface) of the measuring device*
2 *Commubox FXA291*
3 *Computer with FieldCare operating tool with COM DTM CDI Communication FXA291*

Via service interface (CDI-RJ45)

HART

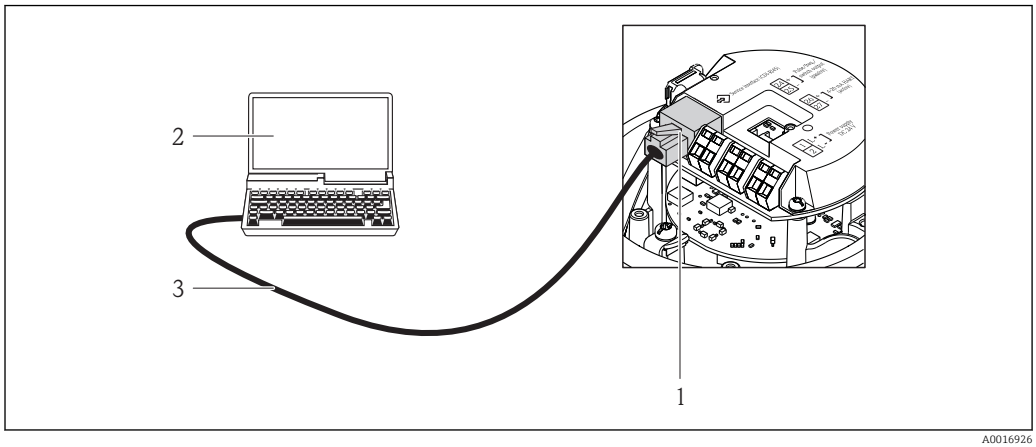

22 Connection for the order code for "Output", option B: 4-20 mA HART, pulse/frequency/switch output

1 *Service interface (CDI -RJ45) of the measuring device with access to the integrated Web server*
2 *Computer with Web browser (e.g. Internet Explorer) for accessing the integrated device Web server or with "FieldCare" operating tool with COM DTM "CDI Communication TCP/IP"*
3 *Standard Ethernet connecting cable with RJ45 plug*

8.4.2 Field Xpert SFX350, SFX370

Function range

Field Xpert SFX350 and Field Xpert SFX370 are mobile computers for commissioning and maintenance. They enable efficient device configuration and diagnostics for HART and FOUNDATION Fieldbus devices in the **non-hazardous area** (SFX350, SFX370) and **hazardous area** (SFX370).

For details, see Operating Instructions BA01202S

Source for device description files

See information → 53

8.4.3 FieldCare

Function scope

FDT-based plant asset management tool from Endress+Hauser. It can configure all smart field devices in a system and helps you manage them. By using the status information, it is also a simple but effective way of checking their status and condition.

Access is via:
- HART protocol
- CDI-RJ45 service interface

Typical functions:
- Configuring parameters of transmitters
- Loading and saving device data (upload/download)
- Documentation of the measuring point
- Visualization of the measured value memory (line recorder) and event logbook

For additional information about FieldCare, see Operating Instructions BA00027S and BA00059S

Source for device description files

See information → 53

Establishing a connection

1. Start FieldCare and launch the project.
2. In the network: Add a device.
   ↳ The **Add device** window opens.
3. Select the **CDI Communication TCP/IP** option from the list and press **OK** to confirm.
4. Right-click **CDI Communication TCP/IP** and select the **Add device** option in the context menu that opens.
5. Select the desired device from the list and press **OK** to confirm.
   ↳ The **CDI Communication TCP/IP (Configuration)** window opens.
6. Enter the device address in the **IP address** field and press **Enter** to confirm: 192.168.1.212 (factory setting); if the IP address is not known .
7. Establish the online connection to the device.

For additional information, see Operating Instructions BA00027S and BA00059S

User interface

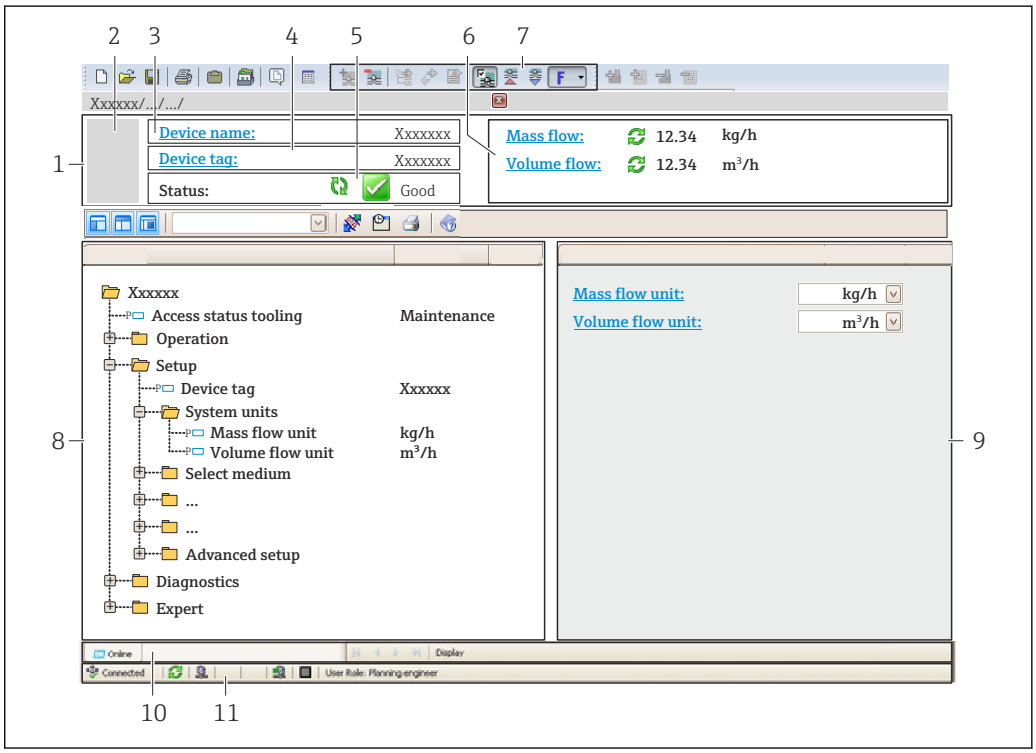

1 *Header*
2 *Picture of device*
3 *Device name*
4 *Tag name*
5 *Status area with status signal→ 92*
6 *Display area for current measured values*
7 *Edit toolbar with additional functions such as save/restore, event list and create documentation*
8 *Navigation area with operating menu structure*
9 *Working area*
10 *Range of action*
11 *Status area*

8.4.4 DeviceCare

Function scope

Tool to connect and configure Endress+Hauser field devices.

The fastest way to configure Endress+Hauser field devices is with the dedicated "DeviceCare" tool. Together with the device type managers (DTMs) it presents a convenient, comprehensive solution.

For details, see Innovation Brochure IN01047S

Source for device description files

See information → 53

8.4.5 AMS Device Manager

Function scope

Program from Emerson Process Management for operating and configuring measuring devices via HART protocol.

Source for device description files

See data → 53

8.4.6 SIMATIC PDM

Function scope

SIMATIC PDM is a standardized, manufacturer-independent program from Siemens for the operation, configuration, maintenance and diagnosis of intelligent field devices via HART protocol.

Source for device description files

See data → 53

8.4.7 Field Communicator 475

Function scope

Industrial handheld terminal from Emerson Process Management for remote configuration and measured value display via HART protocol.

Source for device description files

See data → 53

9 System integration

9.1 Overview of device description files

9.1.1 Current version data for the device

Firmware version	01.01.zz	▪ On the title page of the Operating instructions ▪ On the transmitter nameplate ▪ Firmware version Diagnostics → Device information → Firmware version
Release date of firmware version	06.2014	---
Manufacturer ID	0x11	Manufacturer ID Diagnostics → Device information → Manufacturer ID
Device type ID	0x3A	Device type Diagnostics → Device information → Device type
HART protocol revision	7	---
Device revision	2	▪ On the transmitter nameplate ▪ Device revision Diagnostics → Device information → Device revision

For an overview of the different firmware versions for the device

9.1.2 Operating tools

The suitable device description file for the individual operating tools is listed in the table below, along with information on where the file can be acquired.

Operating tool via HART protocol	Sources for obtaining device descriptions
▪ Field Xpert SFX350 ▪ Field Xpert SFX370	Use update function of handheld terminal
FieldCare	▪ www.endress.com → Download Area ▪ CD–ROM (contact Endress+Hauser) ▪ DVD (contact Endress+Hauser)
DeviceCare	▪ www.endress.com → Download Area ▪ CD–ROM (contact Endress+Hauser) ▪ DVD (contact Endress+Hauser)
AMS Device Manager (Emerson Process Management)	www.endress.com → Download Area
SIMATIC PDM (Siemens)	www.endress.com → Download Area
Field Communicator 475 (Emerson Process Management)	Use update function of handheld terminal

9.2 Measured variables via HART protocol

The following measured variables (HART device variables) are assigned to the dynamic variables at the factory:

Dynamic variables	Measured variables (HART device variables)
Primary dynamic variable (PV)	Volume flow
Secondary dynamic variable (SV)	Totalizer 1
Tertiary dynamic variable (TV)	Totalizer 2
Quaternary dynamic variable (QV)	Totalizer 3

The assignment of the measured variables to the dynamic variables can be modified and assigned as desired via local operation and the operating tool using the following parameters:

- Expert → Communication → HART output → Output → Assign PV
- Expert → Communication → HART output → Output → Assign SV
- Expert → Communication → HART output → Output → Assign TV
- Expert → Communication → HART output → Output → Assign QV

The following measured variables can be assigned to the dynamic variables:

Measured variables for PV (primary dynamic variable)
- Off
- Volume flow
- Mass flow
- Corrected volume flow
- Flow velocity
- Corrected conductivity
- Temperature
- Electronic temperature

Measured variables for SV, TV, QV (secondary, tertiary and quaternary dynamic variable)
- Volume flow
- Mass flow
- Corrected volume flow
- Flow velocity
- Corrected conductivity
- Temperature
- Electronic temperature
- Totalizer 1
- Totalizer 2
- Totalizer 3

The range of options increases if the measuring device has one or more application packages.

Device variables
The device variables are permanently assigned. A maximum of 8 device variables can be transmitted:
- 0 = volume flow
- 1 = mass flow
- 2 = corrected volume flow
- 3 = flow velocity
- 4 = conductivity
- 5 = corrected conductivity
- 6 = temperature
- 7 = electronic temperature
- 8 = totalizer 1
- 9 = totalizer 2
- 10 = totalizer 3

9.3 Other settings

9.3.1 Burst mode functionality in accordance with HART 7 Specification

Navigation
"Expert" menu → Communication → HART output → Burst configuration → Burst configuration 1 to n

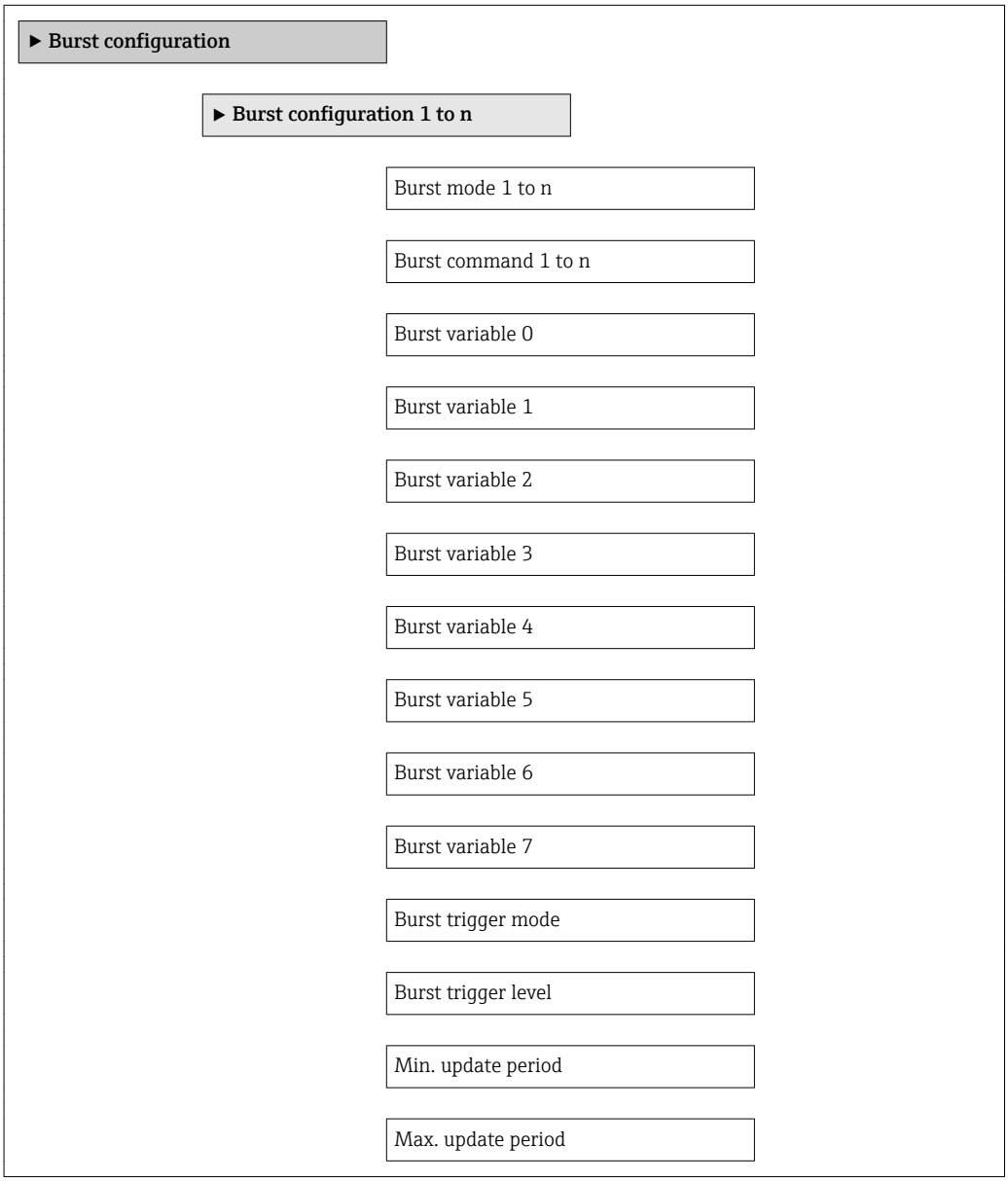

Parameter overview with brief description

Parameter	Description	Selection / User entry	Factory setting
Burst mode 1 to n	Activate the HART burst mode for burst message X.	▪ Off ▪ On	Off
Burst command 1 to n	Select the HART command that is sent to the HART master.	▪ Command 1 ▪ Command 2 ▪ Command 3 ▪ Command 9 ▪ Command 33 ▪ Command 48	Command 2
Burst variable 0		▪ Volume flow ▪ Mass flow ▪ Corrected volume flow ▪ Flow velocity ▪ Conductivity * ▪ Electronic temperature ▪ Totalizer 1 ▪ Totalizer 2 ▪ Totalizer 3 ▪ Density ▪ HART input ▪ Percent of range ▪ Measured current ▪ Primary variable (PV) ▪ Secondary variable (SV) ▪ Tertiary variable (TV) ▪ Quaternary variable (QV) ▪ Not used	Volume flow
Burst variable 1		See the **Burst variable 0** parameter.	Not used
Burst variable 2		See the **Burst variable 0** parameter.	Not used
Burst variable 3		See the **Burst variable 0** parameter.	Not used
Burst variable 4		See the **Burst variable 0** parameter.	Not used
Burst variable 5		See the **Burst variable 0** parameter.	Not used
Burst variable 6		See the **Burst variable 0** parameter.	Not used
Burst variable 7		See the **Burst variable 0** parameter.	Not used
Burst trigger mode	Select the event that triggers burst message X.	▪ Continuous ▪ Window ▪ Rising ▪ Falling ▪ On change	Continuous
Burst trigger level	Enter the burst trigger value. Together with the option selected in the **Burst trigger mode** parameter the burst trigger value determines the time of burst message X.	Positive floating-point number	–
Min. update period		Positive integer	1 000 ms
Max. update period		Positive integer	2 000 ms

* Visibility depends on order options or device settings

10 Commissioning

10.1 Function check

Before commissioning the measuring device:

▶ Make sure that the post-installation and post-connection checks have been performed.

- "Post-installation check" checklist→ 🗎 28
- "Post-connection check" checklist → 🗎 39

10.2 Connecting via FieldCare

- For FieldCare connection
- For connecting via FieldCare → 🗎 51
- For the FieldCare → 🗎 51 user interface

10.3 Setting the operating language

Factory setting: English or ordered local language

The operating language can be set in FieldCare, DeviceCare or via the Web server: Operation → Display language

10.4 Configuring the measuring device

The **Setup** menu with its submenus contains all the parameters needed for standard operation.

Navigation
"Setup" menu

Setup	
Device tag	→ 🗎 58
▶ Current output 1	→ 🗎 59
▶ Pulse/frequency/switch output 1	→ 🗎 60
▶ Display	→ 🗎 65
▶ Output conditioning	→ 🗎 67
▶ Low flow cut off	→ 🗎 68
▶ Empty pipe detection	→ 🗎 70
▶ HART input	→ 🗎 70
▶ Advanced setup	→ 🗎 73

10.4.1 Defining the tag name

To enable fast identification of the measuring point within the system, you can enter a unique designation using the **Device tag** parameter and thus change the factory setting.

Enter the tag name in the "FieldCare" operating tool → 📄 51

Navigation
"Setup" menu → Device tag

Parameter overview with brief description

Parameter	Description	User entry	Factory setting
Device tag	Enter the name for the measuring point.	Max. 32 characters, such as letters, numbers or special characters (e.g. @, %, /).	Promag

10.4.2 Configuring the current output

The **Current output** submenu guides you systematically through all the parameters that have to be set for configuring the current output.

Navigation
"Setup" menu → Current output 1

Structure of the submenu

▶ **Current output 1**

Assign current output	→ 📄 59
Current span	→ 📄 59
0/4 mA value	→ 📄 59
20 mA value	→ 📄 59
Failure mode	→ 📄 60
Failure current	→ 📄 60

Parameter overview with brief description

Parameter	Prerequisite	Description	Selection / User entry	Factory setting
Assign current output	–	Select process variable for current output.	▪ Off ▪ Volume flow ▪ Mass flow ▪ Corrected volume flow ▪ Flow velocity ▪ Conductivity * ▪ Electronic temperature	Volume flow
Current span	–	Select current range for process value output and upper/lower level for alarm signal.	▪ 4...20 mA NAMUR ▪ 4...20 mA US ▪ 4...20 mA ▪ 0...20 mA ▪ Fixed current	Country-specific: ▪ 4...20 mA NAMUR ▪ 4...20 mA US
0/4 mA value	One of the following options is selected in the **Current span** parameter (→ 📄 59): ▪ 4...20 mA NAMUR ▪ 4...20 mA US ▪ 4...20 mA ▪ 0...20 mA	Enter 4 mA value.	Signed floating-point number	Country-specific: ▪ 0 l/h ▪ 0 gal/min (us)
20 mA value	One of the following options is selected in the **Current span** parameter (→ 📄 59): ▪ 4...20 mA NAMUR ▪ 4...20 mA US ▪ 4...20 mA ▪ 0...20 mA	Enter 20 mA value.	Signed floating-point number	Depends on country and nominal diameter

Parameter	Prerequisite	Description	Selection / User entry	Factory setting
Failure mode	One of the following options is selected in the **Assign current output** parameter (→ 🗎 59): ▪ Volume flow ▪ Mass flow ▪ Corrected volume flow ▪ Flow velocity ▪ Conductivity * ▪ Electronic temperature One of the following options is selected in the **Current span** parameter (→ 🗎 59): ▪ 4...20 mA NAMUR ▪ 4...20 mA US ▪ 4...20 mA ▪ 0...20 mA	Define output behavior in alarm condition.	▪ Min. ▪ Max. ▪ Last valid value ▪ Actual value ▪ Defined value	Max.
Failure current	The **Defined value** option is selected in the **Failure mode** parameter.	Enter current output value in alarm condition.	0 to 22.5 mA	22.5 mA

* Visibility depends on order options or device settings

10.4.3 Configuring the pulse/frequency/switch output

The **Pulse/frequency/switch output** submenu contains all the parameters that must be configured for the configuration of the selected output type.

Navigation
"Setup" menu → Pulse/frequency/switch output 1

Structure of the"Pulse/frequency/switch output 1" submenu

▶ Pulse/frequency/switch output 1	
Operating mode	→ 🗎 61
Assign pulse output	→ 🗎 61
Assign frequency output	→ 🗎 62
Switch output function	→ 🗎 64
Assign diagnostic behavior	→ 🗎 64
Assign limit	→ 🗎 64
Assign flow direction check	→ 🗎 65
Assign status	→ 🗎 65
Value per pulse	→ 🗎 61
Pulse width	→ 🗎 62

Failure mode	→ 🗎 62
Minimum frequency value	→ 🗎 62
Maximum frequency value	→ 🗎 63
Measuring value at minimum frequency	→ 🗎 63
Measuring value at maximum frequency	→ 🗎 63
Failure mode	→ 🗎 63
Failure frequency	→ 🗎 64
Switch-on value	→ 🗎 65
Switch-off value	→ 🗎 65
Failure mode	→ 🗎 65
Invert output signal	→ 🗎 62

Configuring the pulse output

Navigation

"Setup" menu → Pulse/frequency/switch output 1

Parameter overview with brief description

Parameter	Prerequisite	Description	Selection / User entry	Factory setting
Operating mode	–	Define the output as a pulse, frequency or switch output.	▪ Pulse ▪ Frequency ▪ Switch	Pulse
Assign pulse output	The **Pulse** option is selected in the **Operating mode** parameter.	Select process variable for pulse output.	▪ Off ▪ Mass flow ▪ Volume flow ▪ Corrected volume flow	Off
Value per pulse	In the **Operating mode** parameter, the **Pulse** option is selected, and one of the following options is selected in the **Assign pulse output** parameter (→ 🗎 61): ▪ Mass flow ▪ Volume flow ▪ Corrected volume flow	Enter measured value at which a pulse is output.	Signed floating-point number	Depends on country and nominal diameter

Parameter	Prerequisite	Description	Selection / User entry	Factory setting
Pulse width	In the **Operating mode** parameter, the **Pulse** option is selected, and one of the following options is selected in the **Assign pulse output** parameter (→ 🗎 61): ▪ Mass flow ▪ Volume flow ▪ Corrected volume flow	Define time width of the output pulse.	0.05 to 2 000 ms	100 ms
Failure mode	In the **Operating mode** parameter, the **Pulse** option is selected, and one of the following options is selected in the **Assign pulse output** parameter (→ 🗎 61): ▪ Mass flow ▪ Volume flow ▪ Corrected volume flow	Define output behavior in alarm condition.	▪ Actual value ▪ No pulses	No pulses
Invert output signal	–	Invert the output signal.	▪ No ▪ Yes	No

Configuring the frequency output

Navigation

"Setup" menu → Pulse/frequency/switch output 1

Parameter overview with brief description

Parameter	Prerequisite	Description	Selection / User entry	Factory setting
Operating mode	–	Define the output as a pulse, frequency or switch output.	▪ Pulse ▪ Frequency ▪ Switch	Pulse
Assign frequency output	The **Frequency** option is selected in the **Operating mode** parameter (→ 🗎 61).	Select process variable for frequency output.	▪ Off ▪ Volume flow ▪ Mass flow ▪ Corrected volume flow ▪ Flow velocity ▪ Conductivity * ▪ Electronic temperature	Off
Minimum frequency value	In the **Operating mode** parameter (→ 🗎 61), the **Frequency** option is selected, and one of the following options is selected in the **Assign frequency output** parameter (→ 🗎 62): ▪ Volume flow ▪ Mass flow ▪ Corrected volume flow ▪ Flow velocity ▪ Conductivity ▪ Electronic temperature	Enter minimum frequency.	0.0 to 10 000.0 Hz	0.0 Hz

Parameter	Prerequisite	Description	Selection / User entry	Factory setting
Maximum frequency value	In the **Operating mode** parameter (→ 🗎 61), the **Frequency** option is selected, and one of the following options is selected in the **Assign frequency output** parameter (→ 🗎 62): ▪ Volume flow ▪ Mass flow ▪ Corrected volume flow ▪ Flow velocity ▪ Conductivity ▪ Electronic temperature	Enter maximum frequency.	0.0 to 10 000.0 Hz	10 000.0 Hz
Measuring value at minimum frequency	In the **Operating mode** parameter (→ 🗎 61), the **Frequency** option is selected, and one of the following options is selected in the **Assign frequency output** parameter (→ 🗎 62): ▪ Volume flow ▪ Mass flow ▪ Corrected volume flow ▪ Flow velocity ▪ Conductivity ▪ Electronic temperature	Enter measured value for minmum frequency.	Signed floating-point number	Depends on country and nominal diameter
Measuring value at maximum frequency	In the **Operating mode** parameter (→ 🗎 61), the **Frequency** option is selected, and one of the following options is selected in the **Assign frequency output** parameter (→ 🗎 62): ▪ Volume flow ▪ Mass flow ▪ Corrected volume flow ▪ Flow velocity ▪ Conductivity ▪ Electronic temperature	Enter measured value for maximum frequency.	Signed floating-point number	Depends on country and nominal diameter
Damping output	In the **Operating mode** parameter (→ 🗎 61) the **Frequency** option is selected and in the **Assign frequency output** parameter (→ 🗎 62) one of the following options is selected: ▪ Volume flow ▪ Mass flow ▪ Corrected volume flow ▪ Flow velocity ▪ Conductivity ▪ Electronic temperature	Set reaction time for output signal to fluctuations in the measured value.	0 to 999.9 s	0.0 s
Failure mode	In the **Operating mode** parameter (→ 🗎 61), the **Frequency** option is selected, and one of the following options is selected in the **Assign frequency output** parameter (→ 🗎 62): ▪ Volume flow ▪ Mass flow ▪ Corrected volume flow ▪ Flow velocity ▪ Conductivity ▪ Electronic temperature	Define output behavior in alarm condition.	▪ Actual value ▪ Defined value ▪ 0 Hz	0 Hz

Parameter	Prerequisite	Description	Selection / User entry	Factory setting
Failure frequency	In the **Operating mode** parameter (→ 🗎 61), the **Frequency** option is selected, and one of the following options is selected in the **Assign frequency output** parameter (→ 🗎 62): ▪ Volume flow ▪ Mass flow ▪ Corrected volume flow ▪ Flow velocity ▪ Conductivity ▪ Electronic temperature	Enter frequency output value in alarm condition.	0.0 to 12 500.0 Hz	0.0 Hz
Invert output signal	–	Invert the output signal.	▪ No ▪ Yes	No

* Visibility depends on order options or device settings

Configuring the switch output

Navigation

"Setup" menu → Pulse/frequency/switch output 1

Parameter overview with brief description

Parameter	Prerequisite	Description	Selection / User entry	Factory setting
Operating mode	–	Define the output as a pulse, frequency or switch output.	▪ Pulse ▪ Frequency ▪ Switch	Pulse
Switch output function	The **Switch** option is selected in the **Operating mode** parameter.	Select function for switch output.	▪ Off ▪ On ▪ Diagnostic behavior ▪ Limit ▪ Flow direction check ▪ Status	Off
Assign diagnostic behavior	▪ In the **Operating mode** parameter, the **Switch** option is selected. ▪ In the **Switch output function** parameter, the **Diagnostic behavior** option is selected.	Select diagnostic behavior for switch output.	▪ Alarm ▪ Alarm or warning ▪ Warning	Alarm
Assign limit	▪ The **Switch** option is selected in the **Operating mode** parameter. ▪ The **Limit** option is selected in the **Switch output function** parameter.	Select process variable for limit function.	▪ Off ▪ Volume flow ▪ Mass flow ▪ Corrected volume flow ▪ Flow velocity ▪ Conductivity * ▪ Totalizer 1 ▪ Totalizer 2 ▪ Totalizer 3 ▪ Electronic temperature	Volume flow

Parameter	Prerequisite	Description	Selection / User entry	Factory setting
Assign flow direction check	▪ The **Switch** option is selected in the **Operating mode** parameter. ▪ The **Flow direction check** option is selected in the **Switch output function** parameter.	Select process variable for flow direction monitoring.	▪ Off ▪ Volume flow ▪ Mass flow ▪ Corrected volume flow	Volume flow
Assign status	▪ The **Switch** option is selected in the **Operating mode** parameter. ▪ The **Status** option is selected in the **Switch output function** parameter.	Select device status for switch output.	▪ Empty pipe detection ▪ Low flow cut off	Empty pipe detection
Switch-on value	▪ In the **Operating mode** parameter, the **Switch** option is selected. ▪ In the **Switch output function** parameter, the **Limit** option is selected.	Enter measured value for the switch-on point.	Signed floating-point number	Country-specific: ▪ 0 l/h ▪ 0 gal/min (us)
Switch-on delay	▪ The **Switch** option is selected in the **Operating mode** parameter. ▪ The **Limit** option is selected in the **Switch output function** parameter.	Define delay for the switch-on of status output.	0.0 to 100.0 s	0.0 s
Switch-off value	▪ In the **Operating mode** parameter, the **Switch** option is selected. ▪ In the **Switch output function** parameter, the **Limit** option is selected.	Enter measured value for the switch-off point.	Signed floating-point number	Country-specific: ▪ 0 l/h ▪ 0 gal/min (us)
Switch-off delay	▪ The **Switch** option is selected in the **Operating mode** parameter. ▪ The **Limit** option is selected in the **Switch output function** parameter.	Define delay for the switch-off of status output.	0.0 to 100.0 s	0.0 s
Failure mode	–	Define output behavior in alarm condition.	▪ Actual status ▪ Open ▪ Closed	Open
Invert output signal	–	Invert the output signal.	▪ No ▪ Yes	No

* Visibility depends on order options or device settings

10.4.4 Configuring the local display

The **Display** wizard guides you systematically through all the parameters that can configured for configuring the local display.

Navigation
"Setup" menu → Display

▶ **Display**	
Format display	→ 📄 66

Value 1 display	→ 📄 66
0% bargraph value 1	→ 📄 66
100% bargraph value 1	→ 📄 66
Value 2 display	→ 📄 66
Value 3 display	→ 📄 66
0% bargraph value 3	→ 📄 66
100% bargraph value 3	→ 📄 67
Value 4 display	→ 📄 67

Parameter overview with brief description

Parameter	Prerequisite	Description	Selection / User entry	Factory setting
Format display	A local display is provided.	Select how measured values are shown on the display.	▪ 1 value, max. size ▪ 1 bargraph + 1 value ▪ 2 values ▪ 1 value large + 2 values ▪ 4 values	1 value, max. size
Value 1 display	A local display is provided.	Select the measured value that is shown on the local display.	▪ Volume flow ▪ Mass flow ▪ Corrected volume flow ▪ Flow velocity ▪ Electronic temperature ▪ Totalizer 1 ▪ Totalizer 2 ▪ Totalizer 3 ▪ Current output 1 ▪ None	Volume flow
0% bargraph value 1	A local display is provided.	Enter 0% value for bar graph display.	Signed floating-point number	Country-specific: ▪ 0 l/h ▪ 0 gal/min (us)
100% bargraph value 1	A local display is provided.	Enter 100% value for bar graph display.	Signed floating-point number	Depends on country and nominal diameter
Value 2 display	A local display is provided.	Select the measured value that is shown on the local display.	For the picklist, see the **Value 1 display** parameter	None
Value 3 display	A local display is provided.	Select the measured value that is shown on the local display.	For the picklist, see the **Value 1 display** parameter (→ 📄 66)	None
0% bargraph value 3	A selection was made in the **Value 3 display** parameter.	Enter 0% value for bar graph display.	Signed floating-point number	Country-specific: ▪ 0 l/h ▪ 0 gal/min (us)

Parameter	Prerequisite	Description	Selection / User entry	Factory setting
100% bargraph value 3	A selection was made in the **Value 3 display** parameter.	Enter 100% value for bar graph display.	Signed floating-point number	0
Value 4 display	A local display is provided.	Select the measured value that is shown on the local display.	For the picklist, see the **Value 1 display** parameter (→ 🗎 66)	None

10.4.5 Configuring the output conditioning

The **Output conditioning** submenu contains all the parameters that must be configured for the configuration of output conditioning.

Navigation
"Setup" menu → Output conditioning

Structure of the"Output conditioning" submenu

▶ Output conditioning	
Assign current output	→ 🗎 67
Damping output 1	→ 🗎 67
Measuring mode output 1	→ 🗎 68
Assign frequency output	→ 🗎 68
Damping output 1	→ 🗎 68
Measuring mode output 1	→ 🗎 68
Assign pulse output	→ 🗎 68
Measuring mode output 1	→ 🗎 68

Parameter overview with brief description

Parameter	Prerequisite	Description	Selection / User entry	Factory setting
Assign current output	–	Select process variable for current output.	▪ Off ▪ Volume flow ▪ Mass flow ▪ Corrected volume flow ▪ Flow velocity ▪ Conductivity * ▪ Electronic temperature	Volume flow
Damping output 1	–	Set reaction time for output signal to fluctuations in the measured value.	0 to 999.9 s	1 s

Parameter	Prerequisite	Description	Selection / User entry	Factory setting
Measuring mode output 1	–	Select measuring mode for output.	▪ Forward flow ▪ Forward/Reverse flow ▪ Reverse flow compensation	Forward flow
Assign frequency output	The **Frequency** option is selected in the **Operating mode** parameter (→ 🗎 61).	Select process variable for frequency output.	▪ Off ▪ Volume flow ▪ Mass flow ▪ Corrected volume flow ▪ Flow velocity ▪ Conductivity * ▪ Electronic temperature	Off
Damping output 1	–	Set reaction time for output signal to fluctuations in the measured value.	0 to 999.9 s	1 s
Measuring mode output 1	–	Select measuring mode for output.	▪ Forward flow ▪ Forward/Reverse flow ▪ Reverse flow ▪ Reverse flow compensation	Forward flow
Assign pulse output	The **Pulse** option is selected in the **Operating mode** parameter.	Select process variable for pulse output.	▪ Off ▪ Mass flow ▪ Volume flow ▪ Corrected volume flow	Off
Measuring mode output 1	–	Select measuring mode for output.	▪ Forward flow ▪ Forward/Reverse flow ▪ Reverse flow ▪ Reverse flow compensation	Forward flow
Operating mode totalizer	–	Select totalizer calculation mode.	▪ Net flow total ▪ Forward flow total ▪ Reverse flow total	Net flow total

* Visibility depends on order options or device settings

10.4.6 Configuring the low flow cut off

The **Low flow cut off** submenu contains the parameters that must be set in order to configure the low flow cut off.

Navigation
"Setup" menu → Low flow cut off

▶ **Low flow cut off**

Assign process variable	→ 🗎 69
On value low flow cutoff	→ 🗎 69

Off value low flow cutoff	→ 🗎 69
Pressure shock suppression	→ 🗎 69

Parameter overview with brief description

Parameter	Prerequisite	Description	Selection / User entry	Factory setting
Assign process variable	–	Select process variable for low flow cut off.	▪ Off ▪ Volume flow ▪ Mass flow ▪ Corrected volume flow	Volume flow
On value low flow cutoff	One of the following options is selected in the **Assign process variable** parameter (→ 🗎 69): ▪ Volume flow ▪ Mass flow ▪ Corrected volume flow	Enter on value for low flow cut off.	Signed floating-point number	Depends on country and nominal diameter
Off value low flow cutoff	One of the following options is selected in the **Assign process variable** parameter (→ 🗎 69): ▪ Volume flow ▪ Mass flow ▪ Corrected volume flow	Enter off value for low flow cut off.	0 to 100.0 %	50 %
Pressure shock suppression	One of the following options is selected in the **Assign process variable** parameter (→ 🗎 69): ▪ Volume flow ▪ Mass flow ▪ Corrected volume flow	Enter time frame for signal suppression (= active pressure shock suppression).	0 to 100 s	0 s

10.4.7 Configuring empty pipe detection

The **Empty pipe detection** submenu contains parameters that must be configured for the configuration of empty pipe detection.

Navigation
"Setup" menu → Empty pipe detection

▶ Empty pipe detection	
Empty pipe detection	→ 🗎 70
New adjustment	→ 🗎 70
Switch point empty pipe detection	→ 🗎 70
Response time empty pipe detection	→ 🗎 70

Parameter overview with brief description

Parameter	Prerequisite	Description	Selection / User interface / User entry	Factory setting
Empty pipe detection	–	Switch empty pipe detection on and off.	▪ Off ▪ On	Off
New adjustment	The **On** option is selected in the **Empty pipe detection** parameter.	Select type of adjustment.	▪ Cancel ▪ Empty pipe adjust ▪ Full pipe adjust	Cancel
Progress	The **On** option is selected in the **Empty pipe detection** parameter.	Shows the progress.	▪ Ok ▪ Busy ▪ Not ok	–
Switch point empty pipe detection	The **On** option is selected in the **Empty pipe detection** parameter.	Enter hysteresis in %, below this value the measuring tube will detected as empty.	0 to 100 %	10 %
Response time empty pipe detection	In the **Empty pipe detection** parameter (→ 🗎 70), the **On** option is selected.	Enter the time before diagnostic message S862 "Pipe empty" is displayed for empty pipe detection.	0 to 100 s	1 s

10.4.8 Configuring the HART input

The **HART input** wizard contains all the parameters that must be configured for the configuration of the HART input.

Navigation
"Setup" menu → HART input

▶ HART input	
Capture mode	→ 🗎 71
Device ID	→ 🗎 71

Device type	→ 🗎 71
Manufacturer ID	→ 🗎 71
Burst command	→ 🗎 71
Slot number	→ 🗎 71
Timeout	→ 🗎 71
Failure mode	→ 🗎 72
Failure value	→ 🗎 72

Parameter overview with brief description

Parameter	Prerequisite	Description	Selection / User entry	Factory setting
Capture mode	–	Select capture mode via burst or master communication.	▪ Off ▪ Burst network ▪ Master network	Off
Device ID	The **Master network** option is selected in the **Capture mode** parameter.	Enter device ID of external device.	6-digit value: ▪ Via local operation: enter as hexadecimal or decimal number ▪ Via operating tool: enter as decimal number	0
Device type	In the **Capture mode** parameter, the **Master network** option is selected.	Enter device type of external device.	2-digit hexadecimal number	0x00
Manufacturer ID	The **Master network** option is selected in the **Capture mode** parameter.	Enter manufacture ID of external device.	2-digit value: ▪ Via local operation: enter as hexadecimal or decimal number ▪ Via operating tool: enter as decimal number	0
Burst command	The **Burst network** option or the **Master network** option are selected in the **Capture mode** parameter.	Select command to read in external process variable.	▪ Command 1 ▪ Command 3 ▪ Command 9 ▪ Command 33	Command 1
Slot number	The **Burst network** option or the **Master network** option is selected in the **Capture mode** parameter.	Define position of external process variable in burst command.	1 to 4	1
Timeout	The **Burst network** option or the **Master network** option is selected in the **Capture mode** parameter.	Enter deadline for process variable of external device. ℹ If the waiting time is exceeded, the diagnostic message ⊗**F410 Data transfer** is displayed.	1 to 120 s	5 s

Parameter	Prerequisite	Description	Selection / User entry	Factory setting
Failure mode	In the **Capture mode** parameter, the **Burst network** option or **Master network** option is selected.	Define behavior if external process variable is missed.	▪ Alarm ▪ Last valid value ▪ Defined value	Alarm
Failure value	The following conditions are met: ▪ In the **Capture mode** parameter, the **Burst network** option or **Master network** option is selected. ▪ In the **Failure mode** parameter, the **Defined value** option is selected.	Enter value to be used by the device if input value from external device is missing.	Signed floating-point number	0

10.5 Advanced settings

The **Advanced setup** submenu together with its submenus contains parameters for specific settings.

Navigation
"Setup" menu → Advanced setup

▶ **Advanced setup**	
Enter access code	
▶ **System units**	→ 73
▶ **Sensor adjustment**	→ 75
▶ **Totalizer 1 to n**	→ 75
▶ **Display**	→ 77
▶ **Electrode cleaning circuit**	→ 79
▶ **Administration**	→ 80

10.5.1 Setting the system units

In the **System units** submenu the units of all the measured values can be set.

Depending on the device version, not all submenus and parameters are available in every device. The selection can vary depending on the order code.

Navigation
"Setup" menu → Advanced setup → System units

▶ **System units**	
Volume flow unit	→ 74
Volume unit	→ 74
Conductivity unit	→ 74
Temperature unit	→ 74
Mass flow unit	→ 74
Mass unit	→ 74
Density unit	→ 74

Corrected volume flow unit	→ 📄 74
Corrected volume unit	→ 📄 74

Parameter overview with brief description

Parameter	Prerequisite	Description	Selection	Factory setting
Volume flow unit	–	Select volume flow unit. *Result* The selected unit applies for: ▪ Output ▪ Low flow cut off ▪ Simulation process variable	Unit choose list	Country-specific: ▪ l/h ▪ gal/min (us)
Volume unit	–	Select volume unit.	Unit choose list	Country-specific: ▪ m^3 ▪ gal (us)
Conductivity unit	The **On** option is selected in the **Conductivity measurement** parameter parameter.	Select conductivity unit. *Effect* The selected unit applies for: ▪ Current output ▪ Frequency output ▪ Switch output ▪ Simulation process variable	Unit choose list	µS/cm
Temperature unit	–	Select temperature unit. *Result* The selected unit applies for: ▪ **Temperature** parameter ▪ **Maximum value** parameter ▪ **Minimum value** parameter ▪ **External temperature** parameter ▪ **Maximum value** parameter ▪ **Minimum value** parameter	Unit choose list	Country-specific: ▪ °C ▪ °F
Mass flow unit	–	Select mass flow unit. *Result* The selected unit applies for: ▪ Output ▪ Low flow cut off ▪ Simulation process variable	Unit choose list	Country-specific: ▪ kg/h ▪ lb/min
Mass unit	–	Select mass unit.	Unit choose list	Country-specific: ▪ kg ▪ lb
Density unit	–	Select density unit. *Result* The selected unit applies for: ▪ Output ▪ Simulation process variable	Unit choose list	Country-specific: ▪ kg/l ▪ lb/ft^3
Corrected volume flow unit	–	Select corrected volume flow unit. *Result* The selected unit applies for: **Corrected volume flow** parameter (→ 📄 86)	Unit choose list	Country-specific: ▪ Nl/h ▪ Sft^3/h
Corrected volume unit	–	Select corrected volume unit.	Unit choose list	Country-specific: ▪ Nm^3 ▪ Sft^3

10.5.2 Carrying out a sensor adjustment

The **Sensor adjustment** submenu contains parameters that pertain to the functionality of the sensor.

Navigation
"Setup" menu → Advanced setup → Sensor adjustment

▶ **Sensor adjustment**

Installation direction → 📄 75

Parameter overview with brief description

Parameter	Description	Selection	Factory setting
Installation direction	Set sign of flow direction to match the direction of the arrow on the sensor.	▪ Flow in arrow direction ▪ Flow against arrow direction	Flow in arrow direction

10.5.3 Configuring the totalizer

In the **"Totalizer 1 to n" submenu** the individual totalizer can be configured.

Navigation
"Setup" menu → Advanced setup → Totalizer 1 to n

▶ **Totalizer 1 to n**

Assign process variable → 📄 75

Unit totalizer → 📄 75

Totalizer operation mode → 📄 76

Failure mode → 📄 76

Parameter overview with brief description

Parameter	Prerequisite	Description	Selection	Factory setting
Assign process variable	–	Select process variable for totalizer.	▪ Off ▪ Volume flow ▪ Mass flow ▪ Corrected volume flow	Volume flow
Unit totalizer	One of the following options is selected in the **Assign process variable** parameter (→ 📄 75) of the **Totalizer 1 to n** submenu: ▪ Volume flow ▪ Mass flow ▪ Corrected volume flow	Select process variable totalizer unit.	Unit choose list	Country-specific: ▪ l ▪ gal (us)

Parameter	Prerequisite	Description	Selection	Factory setting
Totalizer operation mode	One of the following options is selected in the **Assign process variable** parameter (→ 🗎 75) of the **Totalizer 1 to n** submenu: ▪ Volume flow ▪ Mass flow ▪ Corrected volume flow	Select totalizer calculation mode.	▪ Net flow total ▪ Forward flow total ▪ Reverse flow total	Net flow total
Failure mode	One of the following options is selected in the **Assign process variable** parameter (→ 🗎 75) of the **Totalizer 1 to n** submenu: ▪ Volume flow ▪ Mass flow ▪ Corrected volume flow	Define totalizer behavior in alarm condition.	▪ Stop ▪ Actual value ▪ Last valid value	Stop

10.5.4 Carrying out additional display configurations

In the **Display** submenu you can set all the parameters associated with the configuration of the local display.

Navigation
"Setup" menu → Advanced setup → Display

▶ Display	
Format display	→ 78
Value 1 display	→ 78
0% bargraph value 1	→ 78
100% bargraph value 1	→ 78
Decimal places 1	→ 78
Value 2 display	→ 78
Decimal places 2	→ 78
Value 3 display	→ 78
0% bargraph value 3	→ 78
100% bargraph value 3	→ 78
Decimal places 3	→ 78
Value 4 display	→ 78
Decimal places 4	→ 79
Display language	→ 79
Display interval	→ 79
Display damping	→ 79
Header	→ 79
Header text	→ 79
Separator	→ 79
Backlight	

Parameter overview with brief description

Parameter	Prerequisite	Description	Selection / User entry	Factory setting
Format display	A local display is provided.	Select how measured values are shown on the display.	▪ 1 value, max. size ▪ 1 bargraph + 1 value ▪ 2 values ▪ 1 value large + 2 values ▪ 4 values	1 value, max. size
Value 1 display	A local display is provided.	Select the measured value that is shown on the local display.	▪ Volume flow ▪ Mass flow ▪ Corrected volume flow ▪ Flow velocity ▪ Electronic temperature ▪ Totalizer 1 ▪ Totalizer 2 ▪ Totalizer 3 ▪ Current output 1 ▪ None	Volume flow
0% bargraph value 1	A local display is provided.	Enter 0% value for bar graph display.	Signed floating-point number	Country-specific: ▪ 0 l/h ▪ 0 gal/min (us)
100% bargraph value 1	A local display is provided.	Enter 100% value for bar graph display.	Signed floating-point number	Depends on country and nominal diameter
Decimal places 1	A measured value is specified in the **Value 1 display** parameter.	Select the number of decimal places for the display value.	▪ x ▪ x.x ▪ x.xx ▪ x.xxx ▪ x.xxxx	x.xx
Value 2 display	A local display is provided.	Select the measured value that is shown on the local display.	For the picklist, see the **Value 1 display** parameter	None
Decimal places 2	A measured value is specified in the **Value 2 display** parameter.	Select the number of decimal places for the display value.	▪ x ▪ x.x ▪ x.xx ▪ x.xxx ▪ x.xxxx	x.xx
Value 3 display	A local display is provided.	Select the measured value that is shown on the local display.	For the picklist, see the **Value 1 display** parameter (→ 🗎 66)	None
0% bargraph value 3	A selection was made in the **Value 3 display** parameter.	Enter 0% value for bar graph display.	Signed floating-point number	Country-specific: ▪ 0 l/h ▪ 0 gal/min (us)
100% bargraph value 3	A selection was made in the **Value 3 display** parameter.	Enter 100% value for bar graph display.	Signed floating-point number	0
Decimal places 3	A measured value is specified in the **Value 3 display** parameter.	Select the number of decimal places for the display value.	▪ x ▪ x.x ▪ x.xx ▪ x.xxx ▪ x.xxxx	x.xx
Value 4 display	A local display is provided.	Select the measured value that is shown on the local display.	For the picklist, see the **Value 1 display** parameter (→ 🗎 66)	None

Parameter	Prerequisite	Description	Selection / User entry	Factory setting
Decimal places 4	A measured value is specified in the **Value 4 display** parameter.	Select the number of decimal places for the display value.	▪ x ▪ x.x ▪ x.xx ▪ x.xxx ▪ x.xxxx	x.xx
Display language	A local display is provided.	Set display language.	▪ English ▪ Deutsch * ▪ Français * ▪ Español * ▪ Italiano * ▪ Nederlands * ▪ Portuguesa * ▪ Polski * ▪ русский язык (Russian) * ▪ Svenska * ▪ Türkçe * ▪ 中文 (Chinese) * ▪ 日本語 (Japanese) * ▪ 한국어 (Korean) * ▪ العَرَبِيَة (Arabic) * ▪ Bahasa Indonesia * ▪ ภาษาไทย (Thai) * ▪ tiếng Việt (Vietnamese) * ▪ čeština (Czech) *	English (alternatively, the ordered language is preset in the device)
Display interval	A local display is provided.	Set time measured values are shown on display if display alternates between values.	1 to 10 s	5 s
Display damping	A local display is provided.	Set display reaction time to fluctuations in the measured value.	0.0 to 999.9 s	0.0 s
Header	A local display is provided.	Select header contents on local display.	▪ Device tag ▪ Free text	Device tag
Header text	In the **Header** parameter, the **Free text** option is selected.	Enter display header text.	Max. 12 characters such as letters, numbers or special characters (e.g. @, %, /)	----------
Separator	A local display is provided.	Select decimal separator for displaying numerical values.	▪ . (point) ▪ , (comma)	. (point)

* Visibility depends on order options or device settings

10.5.5 Performing electrode cleaning

The **Electrode cleaning circuit** submenu contains parameters that must be configured for the configuration of electrode cleaning.

The submenu is only available if the device was ordered with electrode cleaning.

Navigation
"Setup" menu → Advanced setup → Electrode cleaning circuit

▶ **Electrode cleaning circuit**	
Electrode cleaning circuit	→ 🗎 80

ECC duration	→ 🗎 80
ECC recovery time	→ 🗎 80
ECC cleaning cycle	→ 🗎 80
ECC Polarity	→ 🗎 80

Parameter overview with brief description

Parameter	Prerequisite	Description	Selection / User entry / User interface	Factory setting
Electrode cleaning circuit	For the following order code: "Application package", option **EC** "ECC electrode cleaning"	Enable the cyclic electrode cleaning circuit.	▪ Off ▪ On	Off
ECC duration	For the following order code: "Application package", option **EC** "ECC electrode cleaning"	Enter the duration of electrode cleaning in seconds.	0.01 to 30 s	2 s
ECC recovery time	For the following order code: "Application package", option **EC** "ECC electrode cleaning"	Define recovery time after electrode cleaning. During this time the current output values will be held at last valid value.	Positive floating-point number	60 s
ECC cleaning cycle	For the following order code: "Application package", option **EC** "ECC electrode cleaning"	Enter the pause duration between electrode cleaning cycles.	0.5 to 168 h	0.5 h
ECC Polarity	For the following order code: "Application package", option **EC** "ECC electrode cleaning"	Select the polarity of the electrode cleaning circuit.	▪ Positive ▪ Negative	Depends on the electrode material: ▪ Platinum: **Negative** option ▪ Tantalum, Alloy C22, stainless steel: **Positive** option

10.5.6 Using parameters for device administration

The **Administration** submenu systematically guides the user through all the parameters that can be used for device administration purposes.

Navigation

"Setup" menu → Advanced setup → Administration

▶ **Administration**	
Define access code	→ 🗎 81
Device reset	→ 🗎 81

Parameter overview with brief description

Parameter	Description	User entry / Selection	Factory setting
Define access code	Define release code for write access to parameters.	0 to 9 999	0
Device reset	Reset the device configuration - either entirely or in part - to a defined state.	▪ Cancel ▪ To delivery settings ▪ Restart device	Cancel

10.6 Simulation

The **Simulation** submenu enables you to simulate, without a real flow situation, various process variables in the process and the device alarm mode and to verify downstream signal chains (switching valves or closed-control loops).

Navigation
"Diagnostics" menu → Simulation

▶ Simulation	
Assign simulation process variable	→ 82
Value process variable	→ 82
Simulation current output 1	→ 82
Value current output 1	→ 82
Frequency simulation 1	→ 82
Frequency value 1	→ 82
Pulse simulation 1	→ 82
Pulse value 1	→ 82
Switch output simulation 1	→ 82
Switch status 1	→ 82
Simulation device alarm	→ 82
Diagnostic event category	→ 83
Simulation diagnostic event	→ 83

Parameter overview with brief description

Parameter	Prerequisite	Description	Selection / User entry	Factory setting
Assign simulation process variable	–	Select a process variable for the simulation process that is activated.	▪ Off ▪ Volume flow ▪ Mass flow ▪ Corrected volume flow ▪ Conductivity *	Off
Value process variable	One of the following options is selected in the **Assign simulation process variable** parameter (→ 🗎 82): ▪ Volume flow ▪ Mass flow ▪ Corrected volume flow ▪ Conductivity * ▪ Corrected conductivity * ▪ Temperature *	Enter the simulation value for the selected process variable.	Depends on the process variable selected	0
Simulation current output 1	–	Switch the simulation of the current output on and off.	▪ Off ▪ On	Off
Value current output 1	In the **Simulation current output** parameter, the **On** option is selected.	Enter the current value for simulation.	3.59 to 22.5 mA	3.59 mA
Frequency simulation 1	In the **Operating mode** parameter, the **Frequency** option is selected.	Switch the simulation of the frequency output on and off.	▪ Off ▪ On	Off
Frequency value 1	In the **Frequency simulation** parameter, the **On** option is selected.	Enter the frequency value for the simulation.	0.0 to 12 500.0 Hz	0.0 Hz
Pulse simulation 1	In the **Operating mode** parameter, the **Pulse** option is selected.	Set and switch off the pulse output simulation. ℹ For **Fixed value** option: **Pulse width** parameter (→ 🗎 62) defines the pulse width of the pulses output.	▪ Off ▪ Fixed value ▪ Down-counting value	Off
Pulse value 1	In the **Pulse simulation** parameter (→ 🗎 82), the **Down-counting value** option is selected.	Enter the number of pulses for simulation.	0 to 65 535	0
Switch output simulation 1	In the **Operating mode** parameter, the **Switch** option is selected.	Switch the simulation of the switch output on and off.	▪ Off ▪ On	Off
Switch status 1	In the **Switch output simulation** parameter (→ 🗎 82) **Switch output simulation 1 to n** parameter **Switch output simulation 1 to n** parameter, the **On** option is selected.	Select the status of the status output for the simulation.	▪ Open ▪ Closed	Open
Simulation device alarm	–	Switch the device alarm on and off.	▪ Off ▪ On	Off

Parameter	Prerequisite	Description	Selection / User entry	Factory setting
Diagnostic event category	–	Select a diagnostic event category.	▪ Sensor ▪ Electronics ▪ Configuration ▪ Process	Process
Simulation diagnostic event	–	Select a diagnostic event for the simulation process that is activated.	▪ Off ▪ Diagnostic event picklist (depends on the category selected)	Off

* Visibility depends on order options or device settings

10.7 Protecting settings from unauthorized access

The following options exist for protecting the configuration of the measuring device from unintentional modification after commissioning:
- Write protection via access code for Web browser → 🗎 83
- Write protection via write protection switch → 🗎 84

10.7.1 Write protection via access code

With the customer-specific access code, access to the measuring device via the Web browser is protected, as are the parameters for the measuring device configuration.

Navigation
"Setup" menu → Advanced setup → Administration → Define access code

▶ Administration	
Define access code	→ 🗎 81
Device reset	→ 🗎 81

Defining the access code via the Web browser

1. Navigate to the **Define access code** parameter.
2. Define a max. 16-digit numeric code as an access code.
3. Enter the access code again in the to confirm the code.
   ↳ The Web browser switches to the login page.

If no action is performed for 10 minutes, the Web browser automatically returns to the login page.

- If parameter write protection is activated via an access code, it can also only be deactivated via this access code .
- The user role with which the user is currently logged on via Web browser is indicated by the **Access status tooling** parameter. Navigation path: Operation → Access status tooling

10.7.2 Write protection via write protection switch

The write protection switch makes it possible to block write access to the entire operating menu with the exception of the following parameters:
- External pressure
- External temperature
- Reference density
- All parameters for configuring the totalizer

The parameter values are now read only and cannot be edited any more:
- Via service interface (CDI)
- Via HART protocol

1. Depending on the housing version, loosen the securing clamp or fixing screw of the housing cover.
2. Depending on the housing version, unscrew or open the housing cover and disconnect the local display from the main electronics module where necessary → 📖 125.
3. 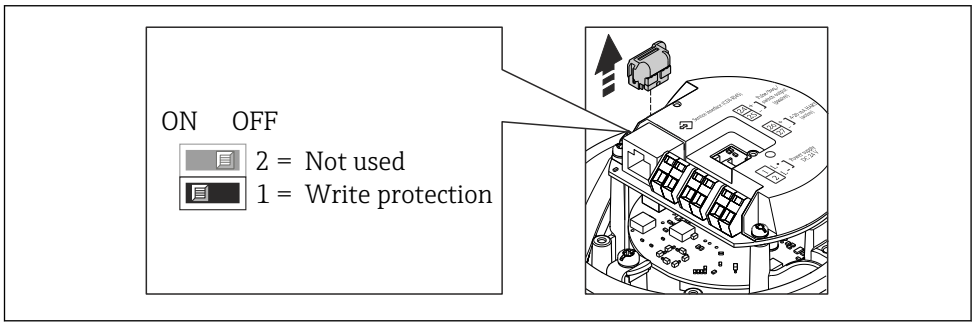

   Disconnect the T-DAT from the main electronics module.
4. Setting the write protection switch on the main electronics module to the **ON** position enables the hardware write protection. Setting the write protection switch on the main electronics module to the **OFF** position (factory setting) disables the hardware write protection.
   ↳ If hardware write protection is enabled: the **Locking status** parameter displays the **Hardware locked** option ; if disabled, the **Locking status** parameter does not display any option .
5. Reverse the removal procedure to reassemble the transmitter.

11 Operation

11.1 Reading the device locking status

Device active write protection: **Locking status** parameter

Navigation
"Operation" menu → Locking status

Function scope of "Locking status" parameter

Options	Description
Hardware locked	The locking switch (DIP switch) for locking the hardware is activated on the main electronic module. This prevents write access to the parameters .
Temporarily locked	Write access to the parameters is temporarily locked on account of internal processes running in the device (e.g. data upload/download, reset etc.). Once the internal processing has been completed, the parameters can be changed once again.

11.2 Reading measured values

With the **Measured values** submenu, it is possible to read all the measured values.

Navigation
"Diagnostics" menu → Measured values

▶ **Measured values**	
▶ **Process variables**	→ 📄 85
▶ **Totalizer**	→ 📄 86
▶ **Output values**	→ 📄 87

11.2.1 "Process variables" submenu

The **Process variables** submenu contains all the parameters needed to display the current measured values for each process variable.

Navigation
"Diagnostics" menu → Measured values → Process variables

▶ **Process variables**	
Volume flow	→ 📄 86
Mass flow	→ 📄 86
Conductivity	→ 📄 86

Corrected volume flow	→ 86
Temperature	→ 86
Corrected conductivity	→ 86

Parameter overview with brief description

Parameter	Prerequisite	Description	User interface
Volume flow	–	Displays the volume flow currently measured. *Dependency* The unit is taken from the **Volume flow unit** parameter (→ 74).	Signed floating-point number
Mass flow	–	Displays the mass flow currently calculated. *Dependency* The unit is taken from the **Mass flow unit** parameter (→ 74).	Signed floating-point number
Corrected volume flow	–	Displays the corrected volume flow currently calculated. *Dependency* The unit is taken from the **Corrected volume flow unit** parameter (→ 74).	Signed floating-point number
Conductivity	The **On** option is selected in the **Conductivity measurement** parameter.	Displays the conductivity currently measured. *Dependency* The unit is taken from the **Conductivity unit** parameter (→ 74).	Signed floating-point number
Corrected conductivity	One of the following conditions is met: ▪ Order code for "Sensor option", option **CI** "Medium temperature sensor" or ▪ The temperature is read into the flowmeter from an external device.	Displays the conductivity currently corrected. *Dependency* The unit is taken from the **Conductivity unit** parameter (→ 74).	Positive floating-point number
Temperature	For the following order code: "Sensor option", option **CI** "Medium temperature sensor"	Displays the temperature currently calculated. *Dependency* The unit is taken from the **Temperature unit** parameter (→ 74).	Positive floating-point number

11.2.2 "Totalizer" submenu

The **Totalizer** submenu contains all the parameters needed to display the current measured values for every totalizer.

Navigation
"Diagnostics" menu → Measured values → Totalizer

▶ **Totalizer**		
	Totalizer value 1 to n	→ 📄 87
	Totalizer overflow 1 to n	→ 📄 87

Parameter overview with brief description

Parameter	Prerequisite	Description	User interface
Totalizer value 1 to n	One of the following options is selected in the **Assign process variable** parameter (→ 📄 75) of the **Totalizer 1 to n** submenu: ▪ Volume flow ▪ Mass flow ▪ Corrected volume flow	Displays the current totalizer counter value.	Signed floating-point number
Totalizer overflow 1 to n	One of the following options is selected in the **Assign process variable** parameter (→ 📄 75) of the **Totalizer 1 to n** submenu: ▪ Volume flow ▪ Mass flow ▪ Corrected volume flow	Displays the current totalizer overflow.	Integer with sign

11.2.3 Output values

The **Output values** submenu contains all the parameters needed to display the current measured values for every output.

Navigation
"Diagnostics" menu → Measured values → Output values

▶ **Output values**		
	Output current 1	→ 📄 88
	Measured current 1	→ 📄 88
	Pulse output 1	→ 📄 88
	Output frequency 1	→ 📄 88
	Switch status 1	→ 📄 88

Parameter overview with brief description

Parameter	Prerequisite	Description	User interface
Output current 1	–	Displays the current value currently calculated for the current output.	3.59 to 22.5 mA
Measured current 1	–	Displays the current value currently measured for the current output.	0 to 30 mA
Pulse output 1	In the **Operating mode** parameter, the **Pulse** option is selected.	Displays the pulse frequency currently output.	Positive floating-point number
Output frequency 1	In the **Operating mode** parameter, the **Frequency** option is selected.	Displays the value currently measured for the frequency output.	0.0 to 12 500.0 Hz
Switch status 1	The **Switch** option is selected in the **Operating mode** parameter.	Displays the current switch output status.	▪ Open ▪ Closed

11.3 Adapting the measuring device to the process conditions

The following are available for this purpose:
- Basic settings using the**Setup** menu (→ 📄 57)
- Advanced settings using the**Advanced setup** submenu (→ 📄 73)

11.4 Performing a totalizer reset

The totalizers are reset in the **Operation** submenu:
- Control Totalizer
- Reset all totalizers

Navigation
"Operation" menu → Totalizer handling

▶ **Totalizer handling**	
Control Totalizer 1 to n	→ 📄 89
Preset value 1 to n	→ 📄 89
Reset all totalizers	→ 📄 89

Parameter overview with brief description

Parameter	Prerequisite	Description	Selection / User entry	Factory setting
Control Totalizer 1 to n	One of the following options is selected in the **Assign process variable** parameter (→ 🗎 75) of the **Totalizer 1 to n** submenu: ▪ Volume flow ▪ Mass flow ▪ Corrected volume flow	Control totalizer value.	▪ Totalize ▪ Reset + hold ▪ Preset + hold ▪ Reset + totalize ▪ Preset + totalize	Totalize
Preset value 1 to n	One of the following options is selected in the **Assign process variable** parameter (→ 🗎 75) of the **Totalizer 1 to n** submenu: ▪ Volume flow ▪ Mass flow ▪ Corrected volume flow	Specify start value for totalizer. *Dependency* ℹ The unit of the selected process variable is specified for the totalizer in the **Unit totalizer** parameter (→ 🗎 75).	Signed floating-point number	0 l
Reset all totalizers	–	Reset all totalizers to 0 and start.	▪ Cancel ▪ Reset + totalize	Cancel

11.4.1 Function scope of the "Control Totalizer" parameter

Options	Description
Totalize	The totalizer is started or continues running.
Reset + hold	The totaling process is stopped and the totalizer is reset to 0.
Preset + hold	The totaling process is stopped and the totalizer is set to its defined start value from the **Preset value** parameter.
Reset + totalize	The totalizer is reset to 0 and the totaling process is restarted.
Preset + totalize	The totalizer is set to the defined start value from the **Preset value** parameter and the totaling process is restarted.

11.4.2 Function scope of the "Reset all totalizers" parameter

Options	Description
Cancel	No action is executed and the user exits the parameter.
Reset + totalize	Resets all totalizers to 0 and restarts the totaling process. This deletes all the flow values previously totalized.

12 Diagnostics and troubleshooting

12.1 General troubleshooting

For local display

Error	Possible causes	Solution
Local display dark and no output signals	Supply voltage does not match the value indicated on the nameplate.	Apply the correct supply voltage .
Local display dark and no output signals	The polarity of the supply voltage is wrong.	Correct the polarity.
Local display dark and no output signals	No contact between connecting cables and terminals.	Check the connection of the cables and correct if necessary.
Local display dark and no output signals	Terminals are not plugged into the I/O electronics module correctly.	Check terminals.
Local display dark and no output signals	I/O electronics module is defective.	Order spare part → 🗎 106.
Local display is dark, but signal output is within the valid range	Display is set too bright or too dark.	▪ Set the display brighter by simultaneously pressing ⊞ + Ⓔ. ▪ Set the display darker by simultaneously pressing ⊟ + Ⓔ.
Local display is dark, but signal output is within the valid range	The cable of the display module is not plugged in correctly.	Insert the plug correctly into the main electronics module and display module.
Local display is dark, but signal output is within the valid range	Display module is defective.	Order spare part → 🗎 106.
Backlighting of local display is red	Diagnostic event with "Alarm" diagnostic behavior has occurred.	Take remedial measures
Message on local display: "Communication Error" "Check Electronics"	Communication between the display module and the electronics is interrupted.	▪ Check the cable and the connector between the main electronics module and display module. ▪ Order spare part → 🗎 106.

For output signals

Error	Possible causes	Solution
Green power LED on the main electronics module of the transmitter is dark	Supply voltage does not match the value indicated on the nameplate.	Apply the correct supply voltage .
Device measures incorrectly.	Configuration error or device is operated outside the application.	1. Check and correct parameter configuration. 2. Observe limit values specified in the "Technical Data".

For access

Error	Possible causes	Solution
No write access to parameters	Hardware write protection enabled	Set the write protection switch on main electronics module to the **OFF** position → 🗎 84.
No connection via HART protocol	Communication resistor missing or incorrectly installed.	Install the communication resistor (250 Ω) correctly. Observe the maximum load .

Error	Possible causes	Solution
No connection via HART protocol	Commubox ▪ Connected incorrectly ▪ Configured incorrectly ▪ Drivers not installed correctly ▪ USB interface on computer configured incorrectly	Observe the documentation for the Commubox. FXA195 HART: Document "Technical Information" TI00404F
Not connecting to Web server	Web server disabled	Using the "FieldCare" or "DeviceCare" operating tool, check whether the Web server of the measuring device is enabled, and enable it if necessary→ 48 .
	Incorrect setting for the Ethernet interface of the computer	1. Check the properties of the Internet protocol (TCP/IP) → 45. 2. Check the network settings with the IT manager.
Not connecting to Web server	Incorrect IP address	Check the IP address: 192.168.1.212 → 45
Web browser frozen and operation no longer possible	Data transfer active	Wait until data transfer or current action is finished.
	Connection lost	1. Check cable connection and power supply. 2. Refresh the Web browser and restart if necessary.
Content of Web browser incomplete or difficult to read	Not using optimum version of Web server.	1. Use the correct Web browser version → 44. 2. Clear the Web browser cache and restart the Web browser.
	Unsuitable view settings.	Change the font size/display ratio of the Web browser.
No or incomplete display of contents in the Web browser	▪ JavaScript not enabled ▪ JavaScript cannot be enabled	1. Enable JavaScript. 2. Enter http://XXX.XXX.X.XXX/basic.html as the IP address.
Operation with FieldCare or DeviceCare via CDI-RJ45 service interface (port 8000)	Firewall of computer or network is preventing communication	Depending on the settings of the firewall used on the computer or in the network, the firewall must be adapted or disabled to allow FieldCare/DeviceCare access.
Flashing of firmware with FieldCare or DeviceCare via CDI-RJ45 service interface (via port 8000 or TFTP ports)	Firewall of computer or network is preventing communication	Depending on the settings of the firewall used on the computer or in the network, the firewall must be adapted or disabled to allow FieldCare/DeviceCare access.

12.2 Diagnostic information via light emitting diodes

12.2.1 Transmitter

Different LEDs in the transmitter provide information on the device status.

LED	Color	Meaning
Supply voltage	Off	Supply voltage is off or too low
	Green	Supply voltage is ok
Link/Activity	Orange	Link available but no activity
	Flashing orange	Activity present
Communication	Flashing white	HART communication is active.

12.3 Diagnostic information in the Web browser

12.3.1 Diagnostic options

Any faults detected by the measuring device are displayed in the Web browser on the home page once the user has logged on.

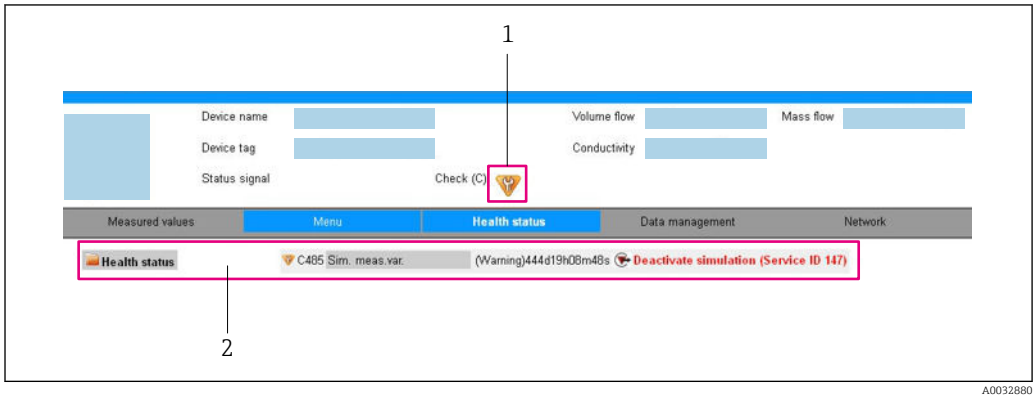

1 *Status area with status signal*
2 *Diagnostic information → 📄 92 and remedial measures with Service ID*

In addition, diagnostic events which have occurred can be shown in the **Diagnostics** menu:
- Via parameter
- Via submenu → 📄 99

Status signals

The status signals provide information on the state and reliability of the device by categorizing the cause of the diagnostic information (diagnostic event).

Symbol	Meaning
⊗	**Failure** A device error has occurred. The measured value is no longer valid.
	Function check The device is in service mode (e.g. during a simulation).
	Out of specification The device is operated: ▪ Outside its technical specification limits (e.g. outside the process temperature range) ▪ Outside of the configuration carried out by the user (e.g. maximum flow in parameter **20 mA value**)
	Maintenance required Maintenance is required. The measured value is still valid.

The status signals are categorized in accordance with VDI/VDE 2650 and NAMUR Recommendation NE 107.

Diagnostic information

The fault can be identified using the diagnostic information. The short text helps you by providing information about the fault.

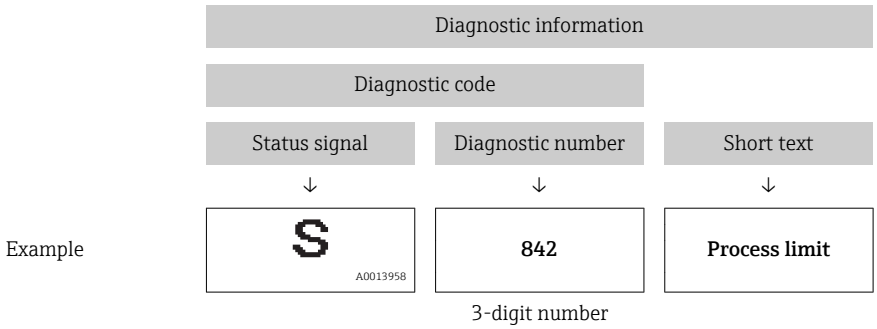

12.3.2 Calling up remedy information

Remedy information is provided for every diagnostic event to ensure that problems can be rectified quickly. These measures are displayed in red along with the diagnostic event and the related diagnostic information.

12.4 Diagnostic information in DeviceCare or FieldCare

12.4.1 Diagnostic options

Any faults detected by the measuring device are displayed on the home page of the operating tool once the connection has been established.

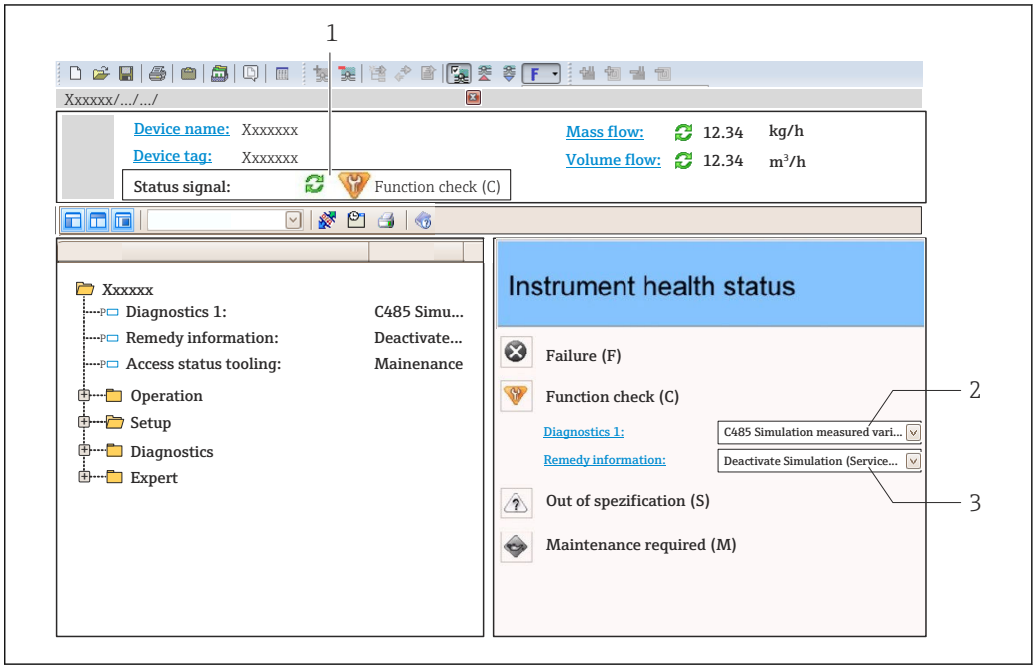

1 *Status area with status signal*
2 *Diagnostic information→ 92*
3 *Remedy information with Service ID*

In addition, diagnostic events which have occurred can be shown in the **Diagnostics** menu:
- Via parameter
- Via submenu → 99

Status signals

The status signals provide information on the state and reliability of the device by categorizing the cause of the diagnostic information (diagnostic event).

Symbol	Meaning
⊗	**Failure** A device error has occurred. The measured value is no longer valid.
	Function check The device is in service mode (e.g. during a simulation).
?	**Out of specification** The device is operated: ▪ Outside its technical specification limits (e.g. outside the process temperature range) ▪ Outside of the configuration carried out by the user (e.g. maximum flow in parameter **20 mA value**)
	Maintenance required Maintenance is required. The measured value is still valid.

The status signals are categorized in accordance with VDI/VDE 2650 and NAMUR Recommendation NE 107.

Diagnostic information

The fault can be identified using the diagnostic information. The short text helps you by providing information about the fault.

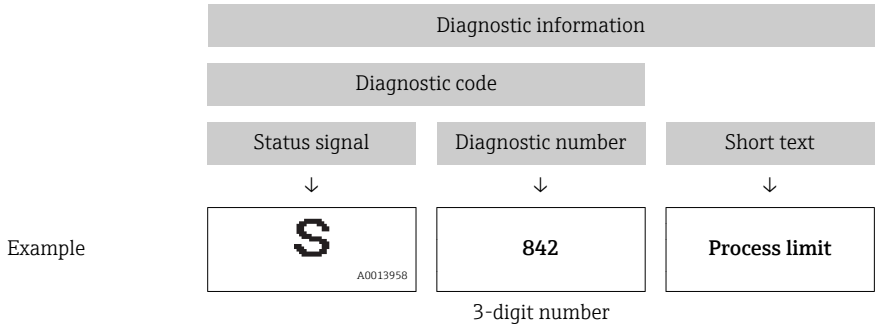

12.4.2 Calling up remedy information

Remedy information is provided for every diagnostic event to ensure that problems can be rectified quickly:

- On the home page
  Remedy information is displayed in a separate field below the diagnostics information.
- In the **Diagnostics** menu
  Remedy information can be called up in the working area of the user interface.

The user is in the **Diagnostics** menu.

1. Call up the desired parameter.
2. On the right in the working area, mouse over the parameter.
   ↳ A tool tip with remedy information for the diagnostic event appears.

12.5 Adapting the diagnostic information

12.5.1 Adapting the diagnostic behavior

Each item of diagnostic information is assigned a specific diagnostic behavior at the factory. The user can change this assignment for specific diagnostic information in the **Diagnostic behavior** submenu.

Expert → System → Diagnostic handling → Diagnostic behavior

You can assign the following options to the diagnostic number as the diagnostic behavior:

Options	Description
Alarm	The device stops measurement. The signal outputs and totalizers assume the defined alarm condition. A diagnostic message is generated.
Warning	The device continues to measure. The signal outputs and totalizers are not affected. A diagnostic message is generated.
Logbook entry only	The device continues to measure. The diagnostic message is entered only in the **Event logbook** submenu (**Event list** submenu) and is not displayed in alternation with the measured value display. The device continues to measure. The diagnostic message is entered only in the **Event logbook** submenu.
Off	The diagnostic event is ignored, and no diagnostic message is generated or entered.

12.5.2 Adapting the status signal

Each item of diagnostic information is assigned a specific status signal at the factory. The user can change this assignment for specific diagnostic information in the **Diagnostic event category** submenu.

Expert → Communication → Diagnostic event category

Available status signals

Configuration as per HART 7 Specification (Condensed Status), in accordance with NAMUR NE107.

Symbol	Meaning
F A0013956	**Failure** A device error is present. The measured value is no longer valid.
C A0013959	**Function check** The device is in service mode (e.g. during a simulation).
S A0013958	**Out of specification** The device is being operated: ▪ Outside its technical specification limits (e.g. outside the process temperature range) ▪ Outside of the configuration carried out by the user (e.g. maximum flow in parameter **20 mA value**)
M A0013957	**Maintenance required** Maintenance is required. The measured value is still valid.
N A0023076	Has no effect on the condensed status.

12.6 Overview of diagnostic information

The amount of diagnostic information and the number of measured variables affected increase if the measuring device has one or more application packages.

In the case of some items of diagnostic information, the status signal and the diagnostic behavior can be changed. Change the diagnostic information → 95

In the case of some items of diagnostic information, the diagnostic behavior can be changed. Change the diagnostic information

Diagnostic number	Short text	Remedy instructions	Status signal [from the factory]	Diagnostic behavior [from the factory]
Diagnostic of sensor				
004	Sensor	1. Change sensor 2. Contact service	S	Alarm [1)]
022	Sensor temperature	1. Change main electronic module 2. Change sensor	F	Alarm
043	Sensor short circuit	1. Check sensor and cable 2. Change sensor or cable	S	Warning
062	Sensor connection	1. Check sensor connections 2. Contact service	F	Alarm
082	Data storage	1. Check module connections 2. Contact service	F	Alarm
083	Memory content	1. Restart device 2. Contact service	F	Alarm
190	Special event 1	Contact service	F	Alarm
Diagnostic of electronic				
201	Device failure	1. Restart device 2. Contact service	F	Alarm
222	Electronic drift	Change main electronic module	F	Alarm
242	Software incompatible	1. Check software 2. Flash or change main electronics module	F	Alarm
252	Modules incompatible	1. Check electronic modules 2. Change electronic modules	F	Alarm
261	Electronic modules	1. Restart device 2. Check electronic modules 3. Change I/O Modul or main electronics	F	Alarm
262	Module connection	1. Check module connections 2. Change main electronics	F	Alarm
270	Main electronic failure	Change main electronic module	F	Alarm
271	Main electronic failure	1. Restart device 2. Change main electronic module	F	Alarm
272	Main electronic failure	1. Restart device 2. Contact service	F	Alarm
273	Main electronic failure	Change electronic	F	Alarm
281	Electronic initialization	Firmware update active, please wait!	F	Alarm
283	Memory content	1. Reset device 2. Contact service	F	Alarm
302	Device verification active	Device verification active, please wait.	C	Warning

Diagnostic number	Short text	Remedy instructions	Status signal [from the factory]	Diagnostic behavior [from the factory]
311	Electronic failure	1. Reset device 2. Contact service	F	Alarm
311	Electronic failure	1. Do not reset device 2. Contact service	M	Warning
322	Electronic drift	1. Perform verification manually 2. Change electronic	S	Warning
375	I/O communication failed	1. Restart device 2. Change main electronic module	F	Alarm
382	Data storage	1. Insert DAT module 2. Change DAT module	F	Alarm
383	Memory content	1. Restart device 2. Check or change DAT module 3. Contact service	F	Alarm
390	Special event 2	Contact service	F	Alarm
Diagnostic of configuration				
410	Data transfer	1. Check connection 2. Retry data transfer	F	Alarm
411	Up-/download active	Up-/download active, please wait	C	Warning
431	Trim 1	Carry out trim	C	Warning
437	Configuration incompatible	1. Restart device 2. Contact service	F	Alarm
438	Dataset	1. Check data set file 2. Check device configuration 3. Up- and download new configuration	M	Warning
441	Current output 1	1. Check process 2. Check current output settings	S	Warning [1)]
442	Frequency output	1. Check process 2. Check frequency output settings	S	Warning [1)]
443	Pulse output	1. Check process 2. Check pulse output settings	S	Warning [1)]
453	Flow override	Deactivate flow override	C	Warning
484	Simulation failure mode	Deactivate simulation	C	Alarm
485	Simulation measured variable	Deactivate simulation	C	Warning
491	Simulation current output 1	Deactivate simulation	C	Warning
492	Simulation frequency output	Deactivate simulation frequency output	C	Warning
493	Simulation pulse output	Deactivate simulation pulse output	C	Warning
494	Switch output simulation	Deactivate simulation switch output	C	Warning
495	Simulation diagnostic event	Deactivate simulation	C	Warning
500	Electrode 1 potential exceeded	1. Check process cond. 2. Increase system pressure	F	Alarm
500	Electrode difference voltage too high		F	Alarm
530	Electrode cleaning is running	1. Check process cond. 2. Increase system pressure	C	Warning

Diagnostic number	Short text	Remedy instructions	Status signal [from the factory]	Diagnostic behavior [from the factory]
531	Empty pipe detection	Execute EPD adjustment	S	Warning [1]
537	Configuration	1. Check IP addresses in network 2. Change IP address	F	Warning
590	Special event 3	Contact service	F	Alarm
Diagnostic of process				
803	Current loop	1. Check wiring 2. Change I/O module	F	Alarm
832	Electronic temperature too high	Reduce ambient temperature	S	Warning [1]
833	Electronic temperature too low	Increase ambient temperature	S	Warning [1]
834	Process temperature too high	Reduce process temperature	S	Warning [1]
835	Process temperature too low	Increase process temperature	S	Warning [1]
842	Process limit	Low flow cut off active! 1. Check low flow cut off configuration	S	Warning
862	Empty pipe	1. Check for gas in process 2. Adjust empty pipe detection	S	Warning [1]
882	Input signal	1. Check input configuration 2. Check external device or process conditions	F	Alarm
937	EMC interference	Change main electronic module	S	Warning [1]
938	EMC interference	1. Check ambient conditions regarding EMC influence 2. Change main electronic module	F	Alarm
990	Special event 4	Contact service	F	Alarm

1) Diagnostic behavior can be changed.

12.7 Pending diagnostic events

The **Diagnostics** menu allows the user to view the current diagnostic event and the previous diagnostic event separately.

To call up the measures to rectify a diagnostic event:
- Via Web browser → 93
- Via "FieldCare" operating tool → 94
- Via "DeviceCare" operating tool → 94

Other pending diagnostic events can be displayed in the **Diagnostic list** submenu → 99

Navigation
"Diagnostics" menu

Diagnostics		
	Actual diagnostics	→ 99

Previous diagnostics	→ 📄 99
Operating time from restart	→ 📄 99
Operating time	→ 📄 99

Parameter overview with brief description

Parameter	Prerequisite	Description	User interface
Actual diagnostics	A diagnostic event has occurred.	Shows the current occured diagnostic event along with its diagnostic information. ℹ If two or more messages occur simultaneously, the message with the highest priority is shown on the display.	Symbol for diagnostic behavior, diagnostic code and short message.
Previous diagnostics	Two diagnostic events have already occurred.	Shows the diagnostic event that occurred prior to the current diagnostic event along with its diagnostic information.	Symbol for diagnostic behavior, diagnostic code and short message.
Operating time from restart	–	Shows the time the device has been in operation since the last device restart.	Days (d), hours (h), minutes (m) and seconds (s)
Operating time	–	Indicates how long the device has been in operation.	Days (d), hours (h), minutes (m) and seconds (s)

12.8 Diagnostic list

Up to 5 currently pending diagnostic events can be displayed in the **Diagnostic list** submenu along with the associated diagnostic information. If more than 5 diagnostic events are pending, the events with the highest priority are shown on the display.

Navigation path
Diagnostics → Diagnostic list

ℹ To call up the measures to rectify a diagnostic event:
- Via Web browser → 📄 93
- Via "FieldCare" operating tool → 📄 94
- Via "DeviceCare" operating tool → 📄 94

12.9 Event logbook

12.9.1 Reading out the event logbook

A chronological overview of the event messages that have occurred is provided in the **Events list** submenu.

Navigation path
Diagnostics menu → **Event logbook** submenu → Event list

A maximum of 20 event messages can be displayed in chronological order.

The event history includes entries for:
- Diagnostic events → 📄 96
- Information events → 📄 100

In addition to the operation time of its occurrence, each event is also assigned a symbol that indicates whether the event has occurred or is ended:
- Diagnostic event
  - ⊕: Occurrence of the event
  - ⊖: End of the event
- Information event
  ⊕: Occurrence of the event

To call up the measures to rectify a diagnostic event:
- Via Web browser → 🗎 93
- Via "FieldCare" operating tool → 🗎 94
- Via "DeviceCare" operating tool → 🗎 94

For filtering the displayed event messages → 🗎 100

12.9.2 Filtering the event logbook

Using the **Filter options** parameter you can define which category of event message is displayed in the **Events list** submenu.

Navigation path
Diagnostics → Event logbook → Filter options

Filter categories
- All
- Failure (F)
- Function check (C)
- Out of specification (S)
- Maintenance required (M)
- Information (I)

12.9.3 Overview of information events

Unlike a diagnostic event, an information event is displayed in the event logbook only and not in the diagnostic list.

Info number	Info name
I1000	--------(Device ok)
I1089	Power on
I1090	Configuration reset
I1091	Configuration changed
I1110	Write protection switch changed
I1137	Electronic changed
I1151	History reset
I1155	Reset electronic temperature
I1157	Memory error event list
I1185	Display backup done
I1186	Restore via display done
I1187	Settings downloaded with display
I1188	Display data cleared
I1189	Backup compared
I1256	Display: access status changed
I1264	Safety sequence aborted
I1278	I/O module reset detected

Info number	Info name
I1335	Firmware changed
I1351	Empty pipe detection adjustment failure
I1353	Empty pipe detection adjustment ok
I1361	Web server: login failed
I1397	Fieldbus: access status changed
I1398	CDI: access status changed
I1444	Device verification passed
I1445	Device verification failed
I1457	Failed:Measured error verification
I1459	Failed: I/O module verification
I1461	Failed: Sensor verification
I1462	Failed:Sensor electronic module verific.

12.10 Resetting the measuring device

Using the**Device reset** parameter (→ 🗎 81) it is possible to reset the entire device configuration or some of the configuration to a defined state.

12.10.1 Function scope of the "Device reset" parameter

Options	Description
Cancel	No action is executed and the user exits the parameter.
To delivery settings	Every parameter for which a customer-specific default setting was ordered is reset to this customer-specific value. All other parameters are reset to the factory setting. ℹ This option is not visible if no customer-specific settings have been ordered.
Restart device	The restart resets every parameter whose data are in the volatile memory (RAM) to the factory setting (e.g. measured value data). The device configuration remains unchanged.

12.11 Device information

The **Device information** submenu contains all parameters that display different information for device identification.

Navigation
"Diagnostics" menu → Device information

▶ Device information	
Device tag	→ 🗎 102
Serial number	→ 🗎 102
Firmware version	→ 🗎 102

Device name	→ 102
Order code	→ 102
Extended order code 1	→ 102
Extended order code 2	→ 103
Extended order code 3	→ 103
ENP version	→ 103
Device revision	→ 103
Device ID	→ 103
Device type	→ 103
Manufacturer ID	→ 103
IP address	→ 103
Subnet mask	→ 103
Default gateway	→ 103

Parameter overview with brief description

Parameter	Description	User interface	Factory setting
Device tag	Shows name of measuring point.	Max. 32 characters, such as letters, numbers or special characters (e.g. @, %, /).	Promag 100
Serial number	Shows the serial number of the measuring device.	A maximum of 11-digit character string comprising letters and numbers.	–
Firmware version	Shows the device firmware version installed.	Character string in the format xx.yy.zz	–
Device name	Shows the name of the transmitter. The name can be found on the nameplate of the transmitter.	Max. 32 characters such as letters or numbers.	Promag 100
Order code	Shows the device order code. The order code can be found on the nameplate of the sensor and transmitter in the "Order code" field.	Character string composed of letters, numbers and certain punctuation marks (e.g. /).	–
Extended order code 1	Shows the 1st part of the extended order code. The extended order code can also be found on the nameplate of the sensor and transmitter in the "Ext. ord. cd." field.	Character string	–

Parameter	Description	User interface	Factory setting
Extended order code 2	Shows the 2nd part of the extended order code. The extended order code can also be found on the nameplate of the sensor and transmitter in the "Ext. ord. cd." field.	Character string	–
Extended order code 3	Shows the 3rd part of the extended order code. The extended order code can also be found on the nameplate of the sensor and transmitter in the "Ext. ord. cd." field.	Character string	–
ENP version	Shows the version of the electronic nameplate (ENP).	Character string	2.02.00
Device revision	Shows the device revision with which the device is registered with the HART Communication Foundation.	2-digit hexadecimal number	2
Device ID	Enter device ID of external device.	6-digit hexadecimal number	–
Device type	Displays the device type with which the measuring device is registered with the HART Communication Foundation.	2-digit hexadecimal number	0x3A
Manufacturer ID	Displays the manufacturer ID with which the measuring device is registered with the HART Communication Foundation.	2-digit hexadecimal number	0x11 (for Endress+Hauser)
IP address	Displays the IP address of the Web server of the measuring device.	4 octet: 0 to 255 (in the particular octet)	192.168.1.212
Subnet mask	Displays the subnet mask.	4 octet: 0 to 255 (in the particular octet)	255.255.255.0
Default gateway	Displays the default gateway.	4 octet: 0 to 255 (in the particular octet)	0.0.0.0

12.12 Firmware history

Release date	Firmware version	Order code for "Firmware version"	Firmware changes	Documentation type	Documentation
04.2013	01.00.00	Option **76**	Original firmware	Operating Instructions	
06.2014	01.01.zz	Option **70**	▪ In accordance with HART 7 Specification ▪ Integration of optional local display ▪ New unit "Beer Barrel (BBL)" ▪ Simulation of diagnostic events ▪ External verification of current and PFS output via Heartbeat application package ▪ Fixed value for simulation pulses	Operating Instructions	BA01305D/06/EN/01.14

It is possible to flash the firmware to the current version or the previous version using the service interface.

For the compatibility of the firmware version with the previous version, the installed device description files and operating tools, observe the information about the device in the "Manufacturer's information" document.

The manufacturer's information is available:
- In the Download Area of the Endress+Hauser web site: www.endress.com → Downloads
- Specify the following details:
  - Product root: e.g. 5H1B
    The product root is the first part of the order code: see the nameplate on the device.
  - Text search: Manufacturer's information
  - Media type: Documentation – Technical Documentation

13 Maintenance

13.1 Maintenance tasks

No special maintenance work is required.

13.1.1 Exterior cleaning

When cleaning the exterior of measuring devices, always use cleaning agents that do not attack the surface of the housing or the seals.

13.1.2 Interior cleaning

No interior cleaning is planned for the device.

13.1.3 Replacing seals

The sensor's seals (particularly aseptic molded seals) must be replaced periodically.

The interval between changes depends on the frequency of the cleaning cycles, the cleaning temperature and the medium temperature.

Replacement seals (accessory part) → 🗎 128

13.2 Measuring and test equipment

Endress+Hauser offers a wide variety of measuring and test equipment, such as W@M or device tests.

Your Endress+Hauser Sales Center can provide detailed information on the services.

List of some of the measuring and testing equipment: → 🗎 108

13.3 Endress+Hauser services

Endress+Hauser offers a wide variety of services for maintenance such as recalibration, maintenance service or device tests.

Your Endress+Hauser Sales Center can provide detailed information on the services.

14 Repairs

14.1 General notes

14.1.1 Repair and conversion concept

The Endress+Hauser repair and conversion concept provides for the following:
- The measuring devices have a modular design.
- Spare parts are grouped into logical kits with the associated Installation Instructions.
- Repairs are carried out by Endress+Hauser Service or by appropriately trained customers.
- Certified devices can only be converted to other certified devices by Endress+Hauser Service or at the factory.

14.1.2 Notes for repair and conversion

For repair and modification of a measuring device, observe the following notes:
- ▶ Use only original Endress+Hauser spare parts.
- ▶ Carry out the repair according to the Installation Instructions.
- ▶ Observe the applicable standards, federal/national regulations, Ex documentation (XA) and certificates.
- ▶ Document every repair and each conversion and enter them into the *W@M* life cycle management database.

14.2 Spare parts

W@M Device Viewer (www.endress.com/deviceviewer):
All the spare parts for the measuring device, along with the order code, are listed here and can be ordered. If available, users can also download the associated Installation Instructions.

Measuring device serial number:
- Is located on the nameplate of the device.
- Can be read out via the **Serial number** parameter (→ 102) in the **Device information** submenu.

14.3 Endress+Hauser services

Endress+Hauser offers a wide range of services.

Your Endress+Hauser Sales Center can provide detailed information on the services.

14.4 Return

The measuring device must be returned if it is need of repair or a factory calibration, or if the wrong measuring device has been delivered or ordered. Legal specifications require Endress+Hauser, as an ISO-certified company, to follow certain procedures when handling products that are in contact with the medium.

To ensure safe, swift and professional device returns, please refer to the procedure and conditions for returning devices provided on the Endress+Hauser website at http://www.endress.com/support/return-material

14.5 Disposal

14.5.1 Removing the measuring device

1. Switch off the device.

⚠ WARNING

Danger to persons from process conditions.

- Beware of hazardous process conditions such as pressure in the measuring device, high temperatures or aggressive fluids.

2. Carry out the mounting and connection steps from the "Mounting the measuring device" and "Connecting the measuring device" sections in reverse order. Observe the safety instructions.

14.5.2 Disposing of the measuring device

⚠ WARNING

Danger to personnel and environment from fluids that are hazardous to health.

- Ensure that the measuring device and all cavities are free of fluid residues that are hazardous to health or the environment, e.g. substances that have permeated into crevices or diffused through plastic.

Observe the following notes during disposal:

- Observe valid federal/national regulations.
- Ensure proper separation and reuse of the device components.

15 Accessories

Various accessories, which can be ordered with the device or subsequently from Endress +Hauser, are available for the device. Detailed information on the order code in question is available from your local Endress+Hauser sales center or on the product page of the Endress+Hauser website: www.endress.com.

15.1 Device-specific accessories

15.1.1 For the transmitter

Accessories	Description
Ground cable	Set, consisting of two ground cables for potential equalization.

15.1.2 For the sensor

Accessories	Description
Ground disks	Are used to ground the medium in lined measuring tubes to ensure proper measurement. For details, see Installation Instructions EA00070D

15.2 Communication-specific accessories

Accessories	Description
Commubox FXA195 HART	For intrinsically safe HART communication with FieldCare via the USB interface. For details, see "Technical Information" TI00404F
Commubox FXA291	Connects Endress+Hauser field devices with a CDI interface (= Endress+Hauser Common Data Interface) and the USB port of a computer or laptop. For details, see the "Technical Information" document TI405C/07
HART Loop Converter HMX50	Is used to evaluate and convert dynamic HART process variables to analog current signals or limit values. For details, see "Technical Information" TI00429F and Operating Instructions BA00371F
Wireless HART adapter SWA70	Is used for the wireless connection of field devices. The WirelessHART adapter can be easily integrated into field devices and existing infrastructures, offers data protection and transmission safety and can be operated in parallel with other wireless networks with minimum cabling complexity. For details, see Operating Instructions BA00061S
Fieldgate FXA320	Gateway for the remote monitoring of connected 4 to 20 mA measuring devices via a Web browser. For details, see "Technical Information" TI00025S and Operating Instructions BA00053S
Fieldgate FXA520	Gateway for the remote diagnostics and remote configuration of connected HART measuring devices via a Web browser. For details, see "Technical Information" TI00025S and Operating Instructions BA00051S

Field Xpert SFX350	Field Xpert SFX350 is a mobile computer for commissioning and maintenance. It enables efficient device configuration and diagnostics for HART devices and can be used in non-hazardous areas. For details, see Operating Instructions BA01202S
Field Xpert SFX370	Field Xpert SFX370 is a mobile computer for commissioning and maintenance. It enables efficient device configuration and diagnostics for HART devices and can be used in the non-hazardous area and in the hazardous area. For details, see Operating Instructions BA01202S

15.3 Service-specific accessories

Accessories	Description
Applicator	Software for selecting and sizing Endress+Hauser measuring devices: ▪ Choice of measuring devices for industrial requirements ▪ Calculation of all the necessary data for identifying the optimum flowmeter: e.g. nominal diameter, pressure loss, flow velocity and accuracy. ▪ Graphic illustration of the calculation results ▪ Determination of the partial order code, administration, documentation and access to all project-related data and parameters over the entire life cycle of a project. Applicator is available: ▪ Via the Internet: https://wapps.endress.com/applicator ▪ As a downloadable DVD for local PC installation.
W@M	W@M Life Cycle Management Improved productivity with information at your fingertips. Data relevant to a plant and its components is generated from the first stages of planning and during the asset's complete life cycle. W@M Life Cycle Management is an open and flexible information platform with online and on-site tools. Instant access for your staff to current, in-depth data shortens your plant's engineering time, speeds up procurement processes and increases plant uptime. Combined with the right services, W@M Life Cycle Management boosts productivity in every phase. For more information, visit www.endress.com/lifecyclemanagement
FieldCare	FDT-based plant asset management tool from Endress+Hauser. It can configure all smart field units in your system and helps you manage them. By using the status information, it is also a simple but effective way of checking their status and condition. For details, see Operating Instructions BA00027S and BA00059S
DeviceCare	Tool for connecting and configuring Endress+Hauser field devices. For details, see Innovation brochure IN01047S

15.4 System components

Accessories	Description
Memograph M graphic data manager	The Memograph M graphic data manager provides information on all the relevant measured variables. Measured values are recorded correctly, limit values are monitored and measuring points analyzed. The data are stored in the 256 MB internal memory and also on a SD card or USB stick. For details, see "Technical Information" TI00133R and Operating Instructions BA00247R

16 Technical data

16.1 Application

The measuring device is only suitable for flow measurement of liquids with a minimum conductivity of 5 µS/cm.

Depending on the version ordered, the measuring device can also measure potentially explosive, flammable, poisonous and oxidizing media.

To ensure that the device remains in proper operating condition for its service life, use the measuring device only for media against which the process-wetted materials are sufficiently resistant.

16.2 Function and system design

Measuring principle

Electromagnetic flow measurement on the basis of *Faraday's law of magnetic induction*.

Measuring system

The device consists of a transmitter and a sensor.

The device is available as a compact version:
The transmitter and sensor form a mechanical unit.

For information on the structure of the device → 📄 12

16.3 Input

Measured variable

Direct measured variables

- Volume flow (proportional to induced voltage)
- Electrical conductivity

Calculated measured variables

- Mass flow
- Corrected volume flow

Measuring range

Typically v = 0.01 to 10 m/s (0.03 to 33 ft/s) with the specified accuracy

Electrical conductivity: ≥ 5 µS/cm for liquids in general

Flow characteristic values in SI units

Nominal diameter		Recommended flow	Factory settings		
		min./max. full scale value (v ~ 0.3/10 m/s)	Full scale value current output (v ~ 2.5 m/s)	Pulse value (~ 2 pulse/s)	Low flow cut off (v ~ 0.04 m/s)
[mm]	[in]	[dm³/min]	[dm³/min]	[dm³]	[dm³/min]
15	½	4 to 100	25	0.2	0.5
25	1	9 to 300	75	0.5	1
32	–	15 to 500	125	1	2
40	1 ½	25 to 700	200	1.5	3
50	2	35 to 1 100	300	2.5	5

Nominal diameter		Recommended flow	Factory settings		
		min./max. full scale value (v ~ 0.3/10 m/s)	Full scale value current output (v ~ 2.5 m/s)	Pulse value (~ 2 pulse/s)	Low flow cut off (v ~ 0.04 m/s)
[mm]	[in]	[dm³/min]	[dm³/min]	[dm³]	[dm³/min]
65	–	60 to 2 000	500	5	8
80	3	90 to 3 000	750	5	12
100	4	145 to 4 700	1200	10	20
125	–	220 to 7 500	1850	15	30
150	6	20 to 600 m³/h	150 m³/h	0.03 m³	2.5 m³/h
200	8	35 to 1 100 m³/h	300 m³/h	0.05 m³	5 m³/h
250	10	55 to 1 700 m³/h	500 m³/h	0.05 m³	7.5 m³/h
300	12	80 to 2 400 m³/h	750 m³/h	0.1 m³	10 m³/h
350	14	110 to 3 300 m³/h	1 000 m³/h	0.1 m³	15 m³/h
400	16	140 to 4 200 m³/h	1 200 m³/h	0.15 m³	20 m³/h
450	18	180 to 5 400 m³/h	1 500 m³/h	0.25 m³	25 m³/h
500	20	220 to 6 600 m³/h	2 000 m³/h	0.25 m³	30 m³/h
600	24	310 to 9 600 m³/h	2 500 m³/h	0.3 m³	40 m³/h

Flow characteristic values in US units

Nominal diameter		Recommended flow	Factory settings		
		min./max. full scale value (v ~ 0.3/10 m/s)	Full scale value current output (v ~ 2.5 m/s)	Pulse value (~ 2 pulse/s)	Low flow cut off (v ~ 0.04 m/s)
[in]	[mm]	[gal/min]	[gal/min]	[gal]	[gal/min]
½	15	1.0 to 27	6	0.1	0.15
1	25	2.5 to 80	18	0.2	0.25
1 ½	40	7 to 190	50	0.5	0.75
2	50	10 to 300	75	0.5	1.25
3	80	24 to 800	200	2	2.5
4	100	40 to 1 250	300	2	4
6	150	90 to 2 650	600	5	12
8	200	155 to 4 850	1200	10	15
10	250	250 to 7 500	1500	15	30
12	300	350 to 10 600	2400	25	45
14	350	500 to 15 000	3600	30	60
16	400	600 to 19 000	4800	50	60
18	450	800 to 24 000	6000	50	90
20	500	1 000 to 30 000	7500	75	120
24	600	1 400 to 44 000	10500	100	180

Recommended measuring range

"Flow limit" section → 🗎 119

Operable flow range	Over 1000 : 1

Input signal

External measured values

To increase the accuracy of certain measured variables or to calculate the corrected volume flow, the automation system can continuously write different measured values to the measuring device:
- Operating pressure to increase accuracy (Endress+Hauser recommends the use of a pressure measuring device for absolute pressure, e.g. Cerabar M or Cerabar S)
- Medium temperature to increase accuracy (e.g. iTEMP)
- Reference density for calculating the corrected volume flow

Various pressure transmitters and temperature measuring devices can be ordered from Endress+Hauser: see "Accessories" section → 📄 109

It is recommended to read in external measured values to calculate the following measured variables:
Corrected volume flow

HART protocol

The measured values are written from the automation system to the measuring device via the HART protocol. The pressure transmitter must support the following protocol-specific functions:
- HART protocol
- Burst mode

16.4 Output

Output signal

Current output

Current output	4-20 mA HART (active)
Maximum output values	▪ DC 24 V (no flow) ▪ 22.5 mA
Load	0 to 700 Ω
Resolution	0.38 µA
Damping	Adjustable: 0.07 to 999 s
Assignable measured variables	▪ Volume flow ▪ Mass flow ▪ Corrected volume flow ▪ Flow velocity ▪ Conductivity ▪ Corrected conductivity ▪ Electronic temperature

Pulse/frequency/switch output

Function	Can be set to pulse, frequency or switch output
Version	Passive, open collector
Maximum input values	▪ DC 30 V ▪ 25 mA
Voltage drop	For 25 mA: ≤ DC 2 V
Pulse output	
Pulse width	Adjustable: 0.05 to 2 000 ms
Maximum pulse rate	10 000 Impulse/s

Pulse value	Adjustable
Assignable measured variables	▪ Volume flow ▪ Mass flow ▪ Corrected volume flow
Frequency output	
Output frequency	Adjustable: 0 to 10 000 Hz
Damping	Adjustable: 0 to 999 s
Pulse/pause ratio	1:1
Assignable measured variables	▪ Volume flow ▪ Mass flow ▪ Corrected volume flow ▪ Flow velocity ▪ Conductivity ▪ Corrected conductivity ▪ Temperature ▪ Electronic temperature
Switch output	
Switching behavior	Binary, conductive or non-conductive
Switching delay	Adjustable: 0 to 100 s
Number of switching cycles	Unlimited
Assignable functions	▪ Off ▪ On ▪ Diagnostic behavior ▪ Limit value: – Off – Volume flow – Mass flow – Corrected volume flow – Flow velocity – Conductivity – Corrected conductivity – Totalizer 1-3 – Temperature – Electronic temperature ▪ Flow direction monitoring ▪ Status – Empty pipe detection – Low flow cut off

Signal on alarm

Depending on the interface, failure information is displayed as follows:

Current output 4 to 20 mA

4 to 20 mA

Failure mode	Choose from: ▪ 4 to 20 mA in accordance with NAMUR recommendation NE 43 ▪ 4 to 20 mA in accordance with US ▪ Min. value: 3.59 mA ▪ Max. value: 22.5 mA ▪ Freely definable value between: 3.59 to 22.5 mA ▪ Actual value ▪ Last valid value

Pulse/frequency/switch output

Pulse output	
Failure mode	Choose from: ▪ Actual value ▪ No pulses
Frequency output	
Failure mode	Choose from: ▪ Actual value ▪ 0 Hz ▪ Defined value: 0 to 12 500 Hz
Switch output	
Failure mode	Choose from: ▪ Current status ▪ Open ▪ Closed

Local display

Plain text display	With information on cause and remedial measures
Backlight	Red backlighting indicates a device error.

Status signal as per NAMUR recommendation NE 107

Interface/protocol

- Via digital communication:
  HART protocol
- Via service interface
  CDI-RJ45 service interface

Plain text display	With information on cause and remedial measures

Web server

Plain text display	With information on cause and remedial measures

Light emitting diodes (LED)

Status information	Status indicated by various light emitting diodes The following information is displayed depending on the device version: ▪ Supply voltage active ▪ Data transmission active ▪ Device alarm/error has occurred Diagnostic information via light emitting diodes

Low flow cut off

The switch points for low flow cut off are user-selectable.

Galvanic isolation

The following connections are galvanically isolated from each other:
- Outputs
- Power supply

Protocol-specific data

Protocol-specific data

- For information on the device description files → 📄 53
- For information on the dynamic variables and measured variables (HART device variables) → 📄 53

16.5 Power supply

Terminal assignment

→ 📄 31

Pin assignment, device plug

→ 📄 32

Supply voltage

The power unit must be tested to ensure it meets safety requirements (e.g. PELV, SELV).

Transmitter

DC 20 to 30 V

Power consumption

Transmitter

Order code for "Output"	Maximum Power consumption
Option **B**: 4-20 mA HART with pulse/frequency/switch output	3.5 W

Current consumption

Transmitter

Order code for "Output"	Maximum Current consumption	Maximum switch-on current
Option **B**: 4-20mA HART, pul./freq./switch output	145 mA	18 A (< 0.125 ms)

Power supply failure

- Totalizers stop at the last value measured.
- Depending on the device version, the configuration is retained in the device memory or in the plug-in memory (HistoROM DAT).
- Error messages (incl. total operated hours) are stored.

Electrical connection

→ 📄 32

Potential equalization

→ 📄 34

Terminals

Transmitter
Spring terminals for wire cross-sections0.5 to 2.5 mm^2 (20 to 14 AWG)

Cable entries

- Cable gland: M20 × 1.5 with cable Φ6 to 12 mm (0.24 to 0.47 in)
- Thread for cable entry:
  - M20
  - G ½"
  - NPT ½"

Cable specification

→ 📄 30

16.6 Performance characteristics

Reference operating conditions

- Error limits following DIN EN 29104, in future ISO 20456
- Water, typically +15 to +45 °C (+59 to +113 °F); 0.5 to 7 bar (73 to 101 psi)
- Data as indicated in the calibration protocol
- Accuracy based on accredited calibration rigs according to ISO 17025

Maximum measured error

Error limits under reference operating conditions

o.r. = of reading

Volume flow
- ±0.5 % o.r. ± 1 mm/s (0.04 in/s)
- Optional: ±0.2 % o.r. ± 2 mm/s (0.08 in/s)

Fluctuations in the supply voltage do not have any effect within the specified range.

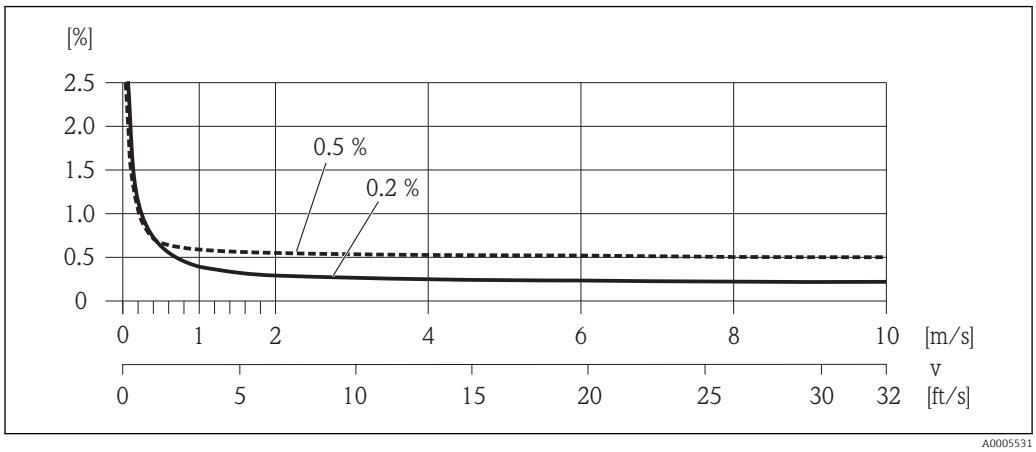

23 *Maximum measured error in % o.r.*

Electrical conductivity
Max. measured error not specified.

Accuracy of outputs

The output accuracy must be factored into the measured error if analog outputs are used, but can be ignored for fieldbus outputs (e.g. Modbus RS485, EtherNet/IP).

The outputs have the following base accuracy specifications.

Current output

Accuracy	Max. ±5 µA

Pulse/frequency output

o.r. = of reading

Accuracy	Max. ±50 ppm o.r. (over the entire ambient temperature range)

Repeatability

o.r. = of reading

Volume flow
Max. ±0.1 % o.r. ± 0.5 mm/s (0.02 in/s)

Electrical conductivity
Max. ±5 % o.r.

Temperature measurement response time

T_{90} < 15 s

Influence of ambient temperature

Current output

o.r. = of reading

Temperature coefficient	Max. ±0.005 % o.r./°C

Pulse/frequency output

Temperature coefficient	No additional effect. Included in accuracy.

16.7 Installation

"Mounting requirements"

16.8 Environment

Ambient temperature range

→ 📄 21

Temperature tables

Observe the interdependencies between the permitted ambient and fluid temperatures when operating the device in hazardous areas.

For detailed information on the temperature tables, see the separate document entitled "Safety Instructions" (XA) for the device.

Storage temperature

The storage temperature corresponds to the operating temperature range of the measuring transmitter and the appropriate measuring sensors.→ 📄 21

- Protect the measuring device against direct sunlight during storage in order to avoid unacceptably high surface temperatures.
- Select a storage location where moisture cannot collect in the measuring device as fungus or bacteria infestation can damage the liner.
- If protection caps or protective covers are mounted these should never be removed before installing the measuring device.

Degree of protection

Transmitter and sensor
- As standard: IP66/67, type 4X enclosure
- When housing is open: IP20, type 1 enclosure
- Display module: IP20, type 1 enclosure

Vibration resistance	▪ Vibration, sinusoidal according to IEC 60068-2-6 – 2 to 8.4 Hz, 3.5 mm peak – 8.4 to 2 000 Hz, 1 g peak ▪ Vibration broad-band random, according to IEC 60068-2-64 – 10 to 200 Hz, 0.003 g^2/Hz – 200 to 2 000 Hz, 0.001 g^2/Hz – Total: 1.54 g rms
Shock resistance	Shock, half-sine according to IEC 60068-2-27 6 ms 30 g
Impact resistance	Rough handling shocks according to IEC 60068-2-31
Mechanical load	▪ Protect the transmitter housing against mechanical effects, such as shock or impact. ▪ Never use the transmitter housing as a ladder or climbing aid.
Electromagnetic compatibility (EMC)	▪ As per IEC/EN 61326 and NAMUR Recommendation 21 (NE 21) ▪ Complies with emission limits for industry as per EN 55011 (Class A) Details are provided in the Declaration of Conformity.

16.9 Process

Medium temperature range

−10 to +110 °C (−4 to +230 °F)

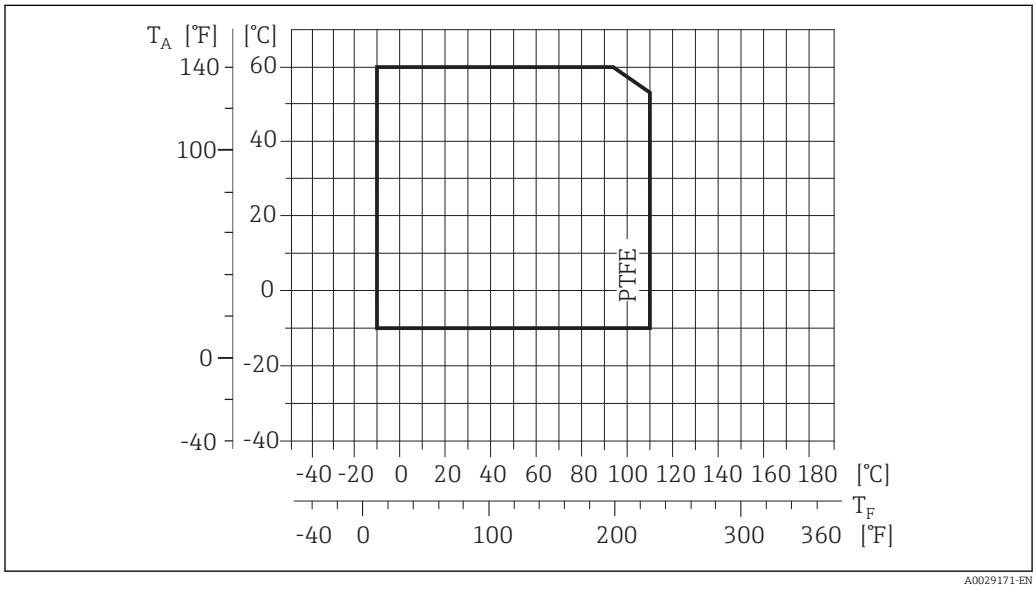

T_A Ambient temperature

T_F Medium temperature

Conductivity

≥ 5 µS/cm for liquids in general. Stronger filter damping is required for very low conductivity values.

Pressure-temperature ratings

An overview of the pressure-temperature ratings for the process connections is provided in the "Technical Information" document

Pressure tightness

"–" = no specifications possible

Liner: PTFE

Nominal diameter		Limit values for absolute pressure in [mbar] ([psi]) for fluid temperatures:			
[mm]	[in]	+25 °C (+77 °F)	+80 °C (+176 °F)	+100 °C (+212 °F)	+110 °C (+230 °F)
15	½	0 (0)	0 (0)	0 (0)	100 (1.45)
25	1	0 (0)	0 (0)	0 (0)	100 (1.45)
32	–	0 (0)	0 (0)	0 (0)	100 (1.45)
40	1 ½	0 (0)	0 (0)	0 (0)	100 (1.45)
50	2	0 (0)	0 (0)	0 (0)	100 (1.45)
65	–	0 (0)	–	40 (0.58)	130 (1.89)
80	3	0 (0)	–	40 (0.58)	130 (1.89)
100	4	0 (0)	–	135 (1.96)	170 (2.47)
125	–	135 (1.96)	–	240 (3.48)	385 (5.58)
150	6	135 (1.96)	–	240 (3.48)	385 (5.58)
200	8	200 (2.90)	–	290 (4.21)	410 (5.95)
250	10	330 (4.79)	–	400 (5.80)	530 (7.69)
300	12	400 (5.80)	–	500 (7.25)	630 (9.14)
350	14	470 (6.82)	–	600 (8.70)	730 (10.6)
400	16	540 (7.83)	–	670 (9.72)	800 (11.6)
450	18	No negative pressure permitted!			
500	20				
600	24				

Flow limit

The diameter of the pipe and the flow rate determine the nominal diameter of the sensor. The optimum velocity of flow is between 2 to 3 m/s (6.56 to 9.84 ft/s). Also match the velocity of flow (v) to the physical properties of the fluid:
- v < 2 m/s (6.56 ft/s): for abrasive fluids (e.g. potter's clay, lime milk, ore slurry)
- v > 2 m/s (6.56 ft/s): for fluids producing buildup (e.g. wastewater sludge)

A necessary increase in the flow velocity can be achieved by reducing the sensor nominal diameter.

For an overview of the full scale values for the measuring range, see the "Measuring range" section → 110

Pressure loss

- No pressure loss occurs if the sensor is installed in a pipe with the same nominal diameter.
- Pressure losses for configurations incorporating adapters according to DIN EN 545 → 22

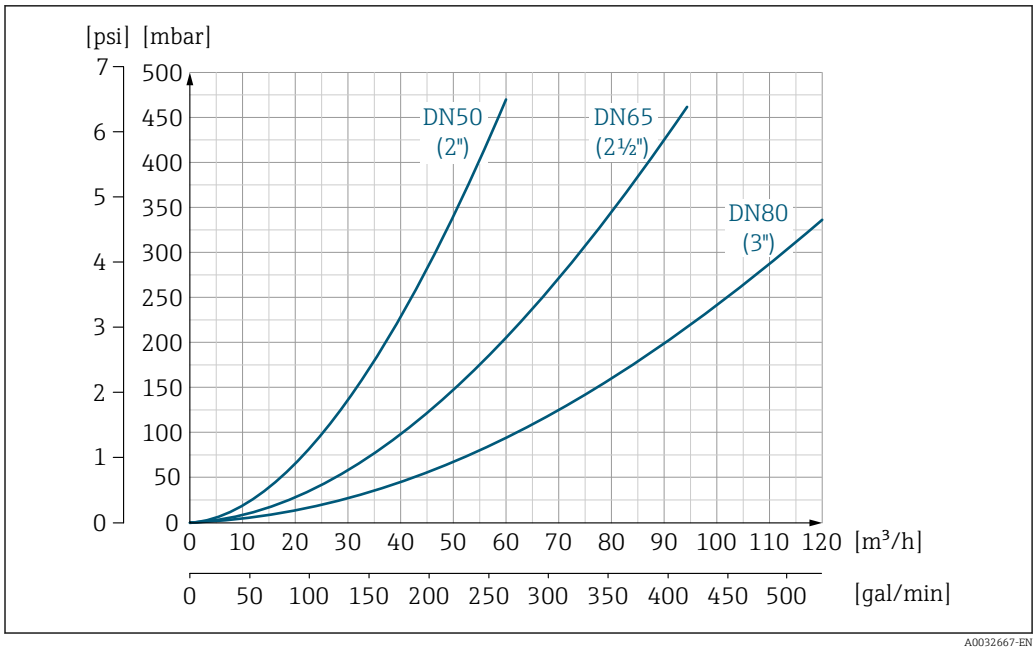

24 *Pressure loss DN 50 to 80 (2 to 3") in the case of order code for "Design", option C "Insertion length short ISO/DVGW to DN300, without inlet/outlet runs, constricted meas.tube"*

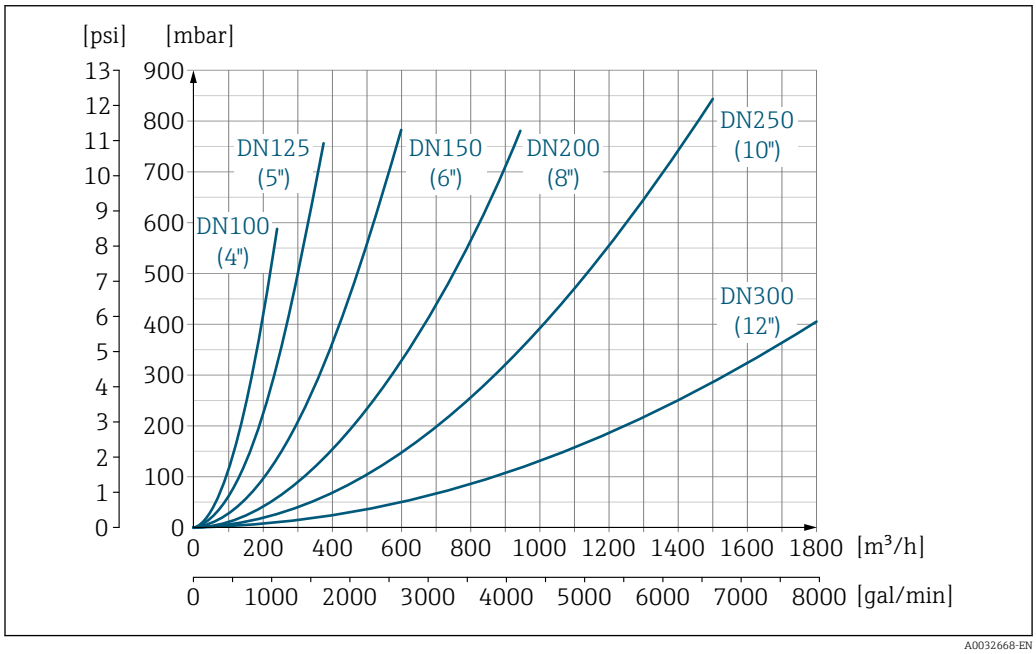

25 *Pressure loss DN 100 to 300 (4 to 12") in the case of order code for "Design", option C "Insertion length short ISO/DVGW to DN300, without inlet/outlet runs, constricted meas.tube"*

System pressure → 21

Vibrations → 22

16.10 Mechanical construction

Design, dimensions

For the dimensions and installation lengths of the device, see the "Technical Information" document, "Mechanical construction" section.

Weight

Compact version

- Including the transmitter (1.8 kg (4.0 lb))
- Weight specifications excluding packaging material

Weight in SI units

Nominal diameter		EN (DIN)				ASME	JIS
		PN 6	PN 10	PN 16	PN 40	Class 150	10K
[mm]	[in]	[kg]	[kg]	[kg]	[kg]	[kg]	[kg]
15	½	–	–	–	4.9	4.9	4.9
25	1	–	–	–	5.7	5.7	5.7
32	–	–	–	–	6.4	–	5.7
40	1 ½	–	–	–	7.8	7.8	6.7
50	2	–	–	–	9.0	9.0	7.7
65	–	–	–	10.4	–	–	9.5
80	3	–	–	12.4	–	12.4	10.9
100	4	–	–	14.4	–	14.4	13.1
125	–	–	–	19.9	–	–	19.4
150	6	–	–	23.9	–	23.9	22.9
200	8	–	43.4	44.4	–	43.4	40.3
250	10	–	63.4	68.4	–	73.4	67.8
300	12	–	68.4	79.4	–	108.4	70.7
350	14	75.8	86.8	102	–	135.8	79
400	16	87.8	102.8	123.8	–	166.8	100
450	18	101.7	116.7	147.6	–	190.9	128
500	20	113.2	130.8	188.3	–	226.8	142
600	24	153.8	179.4	298.3	–	327.1	188

Weight in US units

Nominal diameter		ASME
[mm]	[in]	Class 150 [lbs]
15	½	10.8
25	1	12.6
40	1 ½	17.2
50	2	19.9
80	3	27.3
100	4	31.8
150	6	52.7
200	8	95.7
250	10	161.9
300	12	239.0
350	14	299.4
400	16	367.8

Nominal diameter		ASME
[mm]	[in]	Class 150 [lbs]
450	18	420.8
500	20	500.1
600	24	721.1

Measuring tube specification

Nominal diameter		Pressure rating			Process connection internal diameter	
		EN (DIN)	ASME	JIS	PTFE	
[mm]	[in]	[bar]	[psi]	[bar]	[mm]	[in]
15	½	PN 40	Class 150	20K	14	0.55
25	1	PN 40	Class 150	20K	26	1.02
32	–	PN 40	–	20K	34	1.34
40	1 ½	PN 40	Class 150	20K	40	1.57
50	2	PN 40	Class 150	10K	51	2.01
65	–	PN 16	–	10K	67	2.64
80	3	PN 16	Class 150	10K	79	3.11
100	4	PN 16	Class 150	10K	103	4.06
125	–	PN 16	–	10K	128	5.04
150	6	PN 16	Class 150	10K	155	6.10
200	8	PN 10/16	Class 150	10K	203	7.99
250	10	PN 10	–	10K	257	10.1
250	10	PN 16	Class 150	10K	255	10.0
300	12	PN 16	Class 150	10K	302	11.9
350	14	PN 6/10	–	10K	338	13.3
350	14	PN 16	Class 150	10K	334	13.1
400	16	PN 6/10	–	10K	388	15.3
400	16	PN 16	–	10K	386	15.2
400	16	–	Class 150	10K	384	15.1
450	18	PN 6/10	–	10K	440	17.3
450	18	PN 16	–	10K	438	17.2
450	18	–	Class 150	10K	434	17.1
500	20	PN 6/10	–	10K	491	19.3
500	20	PN 16	–	10K	487	19.2
500	20	–	Class 150	10K	485	19.1
600	24	PN 6	–	10K	592	23.3
600	24	PN 10	–	10K	590	23.2
600	24	PN 16	–	10K	588	23.2
600	24	–	Class 150	10K	582	22.9

Materials

Transmitter housing

- Order code for "Housing", option **A** "Compact, aluminum coated": Aluminum, AlSi10Mg, coated
- Window material for optional local display (→ 124): For order code for "Housing", option **A**: glass

Cable entries/cable glands

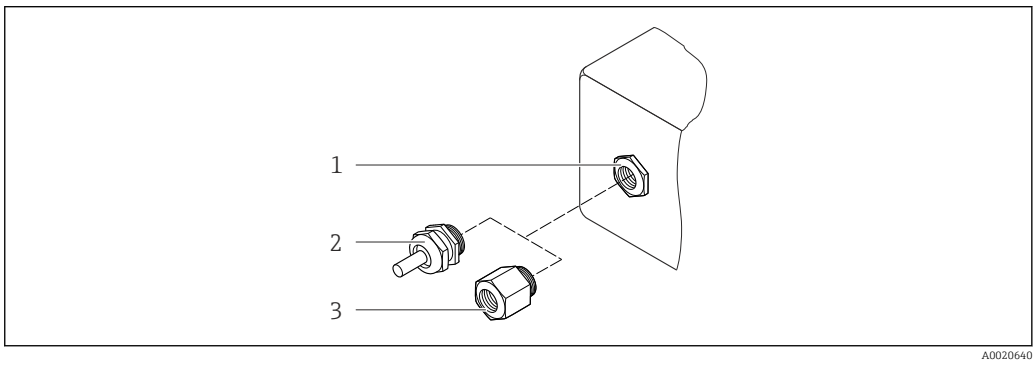

26 Possible cable entries/cable glands

1 Female thread M20 × 1.5
2 Cable gland M20 × 1.5
3 Adapter for cable entry with internal thread G ½" or NPT ½"

Order code for "Housing", option A "Compact, coated aluminum"

The various cable entries are suitable for hazardous and non-hazardous areas.

Cable entry/cable gland	Material
Cable gland M20 × 1.5	Nickel-plated brass
Adapter for cable entry with internal thread G ½"	
Adapter for cable entry with internal thread NPT ½"	

Device plug

Electrical connection	Material
Plug M12x1	▪ Socket: Stainless steel, 1.4404 (316L) ▪ Contact housing: Polyamide ▪ Contacts: Gold-plated brass

Sensor housing

- DN 15 to 300 (½ to 12"): coated aluminum AlSi10Mg
- DN 350 to 600 (14 to 24"): carbon steel with protective varnish

Measuring tubes

Stainless steel, 1.4301/304/1.4306/304L; for flanges made of carbon with Al/Zn protective coating (DN 15 to 300 (½ to 12")) or protective varnish (DN 350 to 600 (14 to 24"))

Liner

PTFE

Process connections

EN 1092-1 (DIN 2501)
Carbon steel, E250C [1]/S235JRG2/P245GH

ASME B16.5
Carbon steel, A105

JIS B2220
Carbon steel, A105/A350 LF2

Electrodes

Stainless steel, 1.4435 (F316L); Alloy C22, 2.4602 (UNS N06022); tantalum

Seals

As per DIN EN 1514-1, form IBC

Accessories

Ground disks

Stainless steel, 1.4435 (F316L); Alloy C22, 2.4602 (UNS N06022); tantalum; titanium

Fitted electrodes

Measuring electrodes, reference electrodes and electrodes for empty pipe detection:
Standard: stainless steel, 1.4435 (F316L); Alloy C22, 2.4602 (UNS N06022); tantalum

Process connections

- EN 1092-1 (DIN 2501): DN ≤ 300 (12") Form A, DN ≥ 350 (14") Form B; dimensions DN 65 PN 16 and only as per EN 1092-1
- ASME B16.5
- JIS B2220
- AS 2129 Table E
- AS 4087 PN 16

Surface roughness

Stainless steel electrodes, 1.4435 (F316L); Alloy C22, 2.4602 (UNS N06022); tantalum:
≤ 0.3 to 0.5 µm (11.8 to 19.7 µin)
(All data relate to parts in contact with fluid)

16.11 Operability

Local display

The local display is only available with the following device order code:
Order code for "Display; operation", option **B**: 4-line; illuminated, via communication

Display element

- 4-line liquid crystal display with 16 characters per line.
- White background lighting; switches to red in event of device errors.
- Format for displaying measured variables and status variables can be individually configured.
- Permitted ambient temperature for the display: −20 to +60 °C (−4 to +140 °F). The readability of the display may be impaired at temperatures outside the temperature range.

1) DN 15 to 300 (½ to 12") with Al/Zn-protective coating; DN 350 to 600 (14 to 24") with protective coating

Disconnecting the local display from the main electronics module

In the case of the "Compact, aluminum coated" housing version, the local display must only be disconnected manually from the main electronics module. In the case of the "Compact, hygienic, stainless" and "Ultra-compact, hygienic, stainless" housing versions, the local display is integrated in the housing cover and is disconnected from the main electronics module when the housing cover is opened.

"Compact, aluminum coated" housing version

The local display is plugged onto the main electronics module. The electronic connection between the local display and main electronics module is established via a connecting cable.

For some work performed on the measuring device (e.g. electrical connection), it is advisable to disconnect the local display from the main electronics module:

1. Press in the side latches of the local display.
2. Remove the local display from the main electronics module. Pay attention to the length of the connecting cable when doing so.

Once the work is completed, plug the local display back on.

Remote operation

Via HART protocol

This communication interface is available in device versions with a HART output.

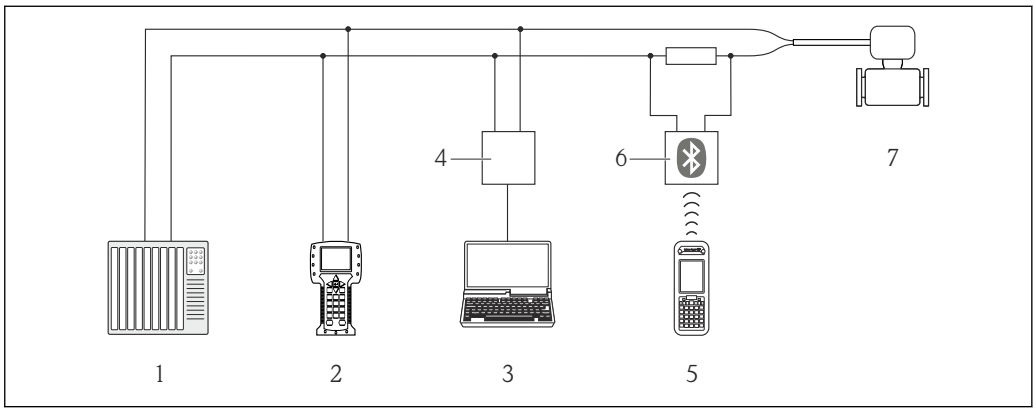

27 Options for remote operation via HART protocol

1 *Control system (e.g. PLC)*
2 *Field Communicator 475*
3 *Computer with operating tool (e.g. FieldCare, AMS Device Manager, SIMATIC PDM)*
4 *Commubox FXA195 (USB)*
5 *Field Xpert SFX350 or SFX370*
6 *VIATOR Bluetooth modem with connecting cable*
7 *Transmitter*

Service interface

Via service interface (CDI-RJ45)

HART

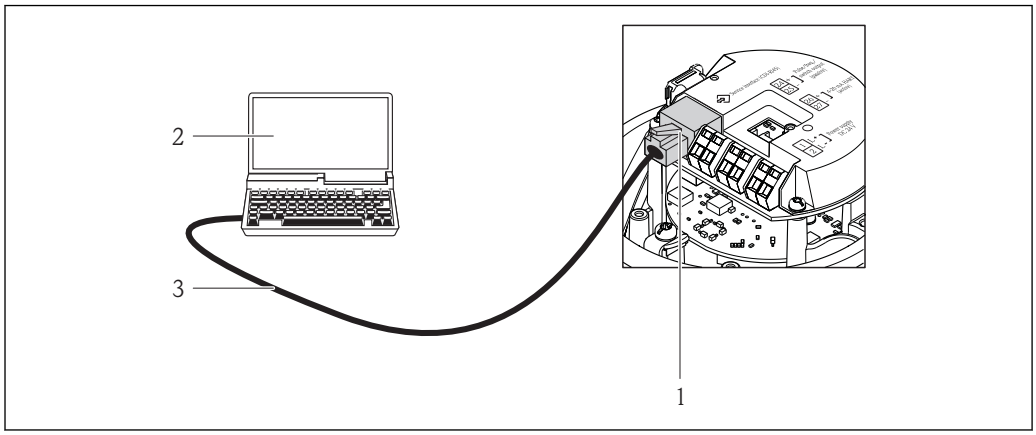

28 Connection for the order code for "Output", option B: 4-20 mA HART, pulse/frequency/switch output

1. *Service interface (CDI -RJ45) of the measuring device with access to the integrated Web server*
2. *Computer with Web browser (e.g. Internet Explorer) for accessing the integrated device Web server or with "FieldCare" operating tool with COM DTM "CDI Communication TCP/IP"*
3. *Standard Ethernet connecting cable with RJ45 plug*

Languages

Can be operated in the following languages:
- Via "FieldCare" operating tool: English, German, French, Spanish, Italian, Chinese, Japanese
- Via Web browser
  English, German, French, Spanish, Italian, Dutch, Portuguese, Polish, Russian, Turkish, Chinese, Japanese, Bahasa (Indonesian), Vietnamese, Czech, Swedish, Korean

16.12 Certificates and approvals

CE mark

The measuring system is in conformity with the statutory requirements of the applicable EU Directives. These are listed in the corresponding EU Declaration of Conformity along with the standards applied.

Endress+Hauser confirms successful testing of the device by affixing to it the CE mark.

C-Tick symbol

The measuring system meets the EMC requirements of the "Australian Communications and Media Authority (ACMA)".

Ex approval

The devices are certified for use in hazardous areas and the relevant safety instructions are provided in the separate "Safety Instructions" (XA) document. Reference is made to this document on the nameplate.

HART certification

HART interface

The measuring device is certified and registered by the FieldComm Group. The measuring system meets all the requirements of the following specifications:
- Certified according to HART 7
- The device can also be operated with certified devices of other manufacturers (interoperability)

Pressure Equipment Directive

- With the identification PED/G1/x (x = category) on the sensor nameplate, Endress+Hauser confirms conformity with the "Essential Safety Requirements" specified in Appendix I of the Pressure Equipment Directive 2014/68/EC.
- Devices not bearing this marking (PED) are designed and manufactured according to good engineering practice. They meet the requirements of Art. 4, Par. 3 of the Pressure Equipment Directive 2014/68/EU. The range of application is indicated in tables 6 to 9 in Annex II of the Pressure Equipment Directive 2014/68/EC.

Other standards and guidelines

- EN 60529
  Degrees of protection provided by enclosures (IP code)
- EN 61010-1
  Safety requirements for electrical equipment for measurement, control and laboratory use - general requirements
- IEC/EN 61326
  Emission in accordance with Class A requirements. Electromagnetic compatibility (EMC requirements).
- NAMUR NE 21
  Electromagnetic compatibility (EMC) of industrial process and laboratory control equipment
- NAMUR NE 32
  Data retention in the event of a power failure in field and control instruments with microprocessors
- NAMUR NE 43
  Standardization of the signal level for the breakdown information of digital transmitters with analog output signal.
- NAMUR NE 53
  Software of field devices and signal-processing devices with digital electronics
- NAMUR NE 105
  Specifications for integrating fieldbus devices in engineering tools for field devices
- NAMUR NE 107
  Self-monitoring and diagnosis of field devices
- NAMUR NE 131
  Requirements for field devices for standard applications

16.13 Application packages

Many different application packages are available to enhance the functionality of the device. Such packages might be needed to address safety aspects or specific application requirements.

The application packages can be ordered with the device or subsequently from Endress+Hauser. Detailed information on the order code in question is available from your local Endress+Hauser sales center or on the product page of the Endress+Hauser website: www.endress.com.

Cleaning

Package	Description
Electrode cleaning circuit (ECC)	The electrode cleaning circuit (ECC) function has been developed to have a solution for applications where magnetite (Fe_3O_4) deposits frequently occur (e.g. hot water). Since magnetite is highly conductive this build up leads to measuring errors and ultimately to the loss of signal. The application package is designed to AVOID build up of highly conductive matter and thin layers (typical of magnetite).

Heartbeat Technology

Package	Description
Heartbeat Verification +Monitoring	**Heartbeat Verification** Meets the requirement for traceable verification to DIN ISO 9001:2008 Chapter 7.6 a) "Control of monitoring and measuring equipment". ▪ Functional testing in the installed state without interrupting the process. ▪ Traceable verification results on request, including a report. ▪ Simple testing process via local operation or other operating interfaces. ▪ Clear measuring point assessment (pass/fail) with high test coverage within the framework of manufacturer specifications. ▪ Extension of calibration intervals according to operator's risk assessment. **Heartbeat Monitoring** Continuously supplies data, which are characteristic of the measuring principle, to an external condition monitoring system for the purpose of preventive maintenance or process analysis. These data enable the operator to: ▪ Draw conclusions - using these data and other information - about the impact process influences (such as corrosion, abrasion, buildup etc.) have on the measuring performance over time. ▪ Schedule servicing in time. ▪ Monitor the process or product quality, e.g. gas pockets.

16.14 Accessories

Overview of accessories available for order → 108

16.15 Supplementary documentation

For an overview of the scope of the associated Technical Documentation, refer to the following:
- The *W@M Device Viewer* : Enter the serial number from the nameplate (www.endress.com/deviceviewer)
- The *Endress+Hauser Operations App*: Enter the serial number from the nameplate or scan the 2-D matrix code (QR code) on the nameplate.

Standard documentation

Brief Operating Instructions

Brief Operating Instructions containing all the important information for standard commissioning is enclosed with the device.

Operating Instructions

Measuring device	Documentation code				
	HART	PROFIBUS DP	Modbus RS485	EtherNet/IP	PROFINET
Promag E 100	BA01305D	BA01307D	BA01306D	BA01308D	BA01423D

Description of device parameters

Measuring device	Documentation code				
	HART	PROFIBUS DP	Modbus RS485	EtherNet/IP	PROFINET
Promag 100	GP01038D	GP01039D	GP01040D	GP01041D	GP01042D

Supplementary device-dependent documentation

Safety Instructions

Contents	Documentation code
ATEX/IECEx Ex nA	XA01090D

Special Documentation

Contents	Documentation code
Information on the Pressure Equipment Directive	SD01056D
Heartbeat Technology	SD01149D

Installation Instructions

Contents	Comment
Installation instructions for spare part sets and accessories	▪ Access the overview of all the available spare part sets via *W@M Device Viewer* → 🗎 106 ▪ Accessories available for order with Installation Instructions → 🗎 108

Index

A
Adapters . . . 22
Adapting the diagnostic behavior . . . 95
Adapting the status signal . . . 95
Ambient temperature
  Influence . . . 117
Ambient temperature range . . . 21
AMS Device Manager . . . 52
  Function . . . 52
Application . . . 110
Applicator . . . 110
Approvals . . . 126

B
Burst mode . . . 55

C
C-Tick symbol . . . 126
Cable entries
  Technical data . . . 115
Cable entry
  Degree of protection . . . 39
CE mark . . . 10, 126
Certificates . . . 126
Checklist
  Post-connection check . . . 39
  Post-installation check . . . 28
Cleaning
  Exterior cleaning . . . 105
  Interior cleaning . . . 105
Commissioning . . . 57
  Advanced settings . . . 73
  Configuring the measuring device . . . 57
Communication-specific data . . . 53
Conductivity . . . 118
Connecting cable . . . 30
Connecting the measuring device . . . 32
Connection
  see Electrical connection
Connection examples, potential equalization . . . 35
Connection preparations . . . 32
Connection tools . . . 30
Current consumption . . . 115

D
Declaration of Conformity . . . 10
Define access code . . . 83
Degree of protection . . . 39, 117
Design
  Measuring device . . . 12
Designated use . . . 9
Device components . . . 12
Device description files . . . 53
Device documentation
  Supplementary documentation . . . 8
Device locking, status . . . 85
Device name
  Sensor . . . 15
  Transmitter . . . 14
Device repair . . . 106
Device revision . . . 53
Device type ID . . . 53
DeviceCare . . . 52
Diagnostic information
  Design, description . . . 92, 94
  DeviceCare . . . 93
  FieldCare . . . 93
  Light emitting diodes . . . 91
  Overview . . . 96
  Remedial measures . . . 96
  Web browser . . . 92
Diagnostic list . . . 99
DIP switches
  see Write protection switch
Disabling write protection . . . 83
Display values
  For locking status . . . 85
Disposal . . . 107
Document
  Function . . . 6
  Symbols used . . . 6
Document function . . . 6
Down pipe . . . 19

E
ECC . . . 79
Electrical connection
  Commubox FXA195 (USB) . . . 49, 125
  Commubox FXA291 . . . 49
  Degree of protection . . . 39
  Field Communicator 475 . . . 49, 125
  Field Xpert SFX350/SFX370 . . . 49, 125
  Measuring device . . . 30
  Operating tool (e.g. FieldCare, AMS Device Manager, SIMATIC PDM) . . . 49, 125
  Operating tools
    Via HART protocol . . . 49, 125
    Via service interface (CDI-RJ45) . . . 49, 125
    Via service interface (CDI) . . . 49
  VIATOR Bluetooth modem . . . 49, 125
  Web server . . . 49, 125
Electromagnetic compatibility . . . 118
Enabling write protection . . . 83
Endress+Hauser services
  Maintenance . . . 105
  Repair . . . 106
Environment
  Ambient temperature . . . 21
  Impact resistance . . . 118
  Mechanical load . . . 118
  Shock resistance . . . 118
  Storage temperature . . . 117

Vibration resistance . . . 118
Error messages
see Diagnostic messages
Event list . . . 99
Event logbook . . . 99
Ex approval . . . 126
Extended order code
Sensor . . . 15
Transmitter . . . 14
Exterior cleaning . . . 105

F

Field Communicator
Function . . . 52
Field Communicator 475 . . . 52
Field of application
Residual risks . . . 10
Field Xpert
Function . . . 50
Field Xpert SFX350 . . . 50
FieldCare . . . 50
Device description file . . . 53
Establishing a connection . . . 51
Function . . . 50
User interface . . . 51
Filtering the event logbook . . . 100
Firmware
Release date . . . 53
Version . . . 53
Firmware history . . . 104
Fitted electrodes . . . 124
Flow direction . . . 20
Flow limit . . . 119
Function check . . . 57
Function range
Field Xpert . . . 50
Function scope
AMS Device Manager . . . 52
Field Communicator . . . 52
Field Communicator 475 . . . 52
SIMATIC PDM . . . 52
Functions
see Parameter

G

Galvanic isolation . . . 114

H

Hardware write protection . . . 84
HART certification . . . 126
HART input
Settings . . . 70
HART protocol
Device variables . . . 53
Measured variables . . . 53

I

I/O electronics module . . . 12, 33
Identifying the measuring device . . . 13
Impact resistance . . . 118
Incoming acceptance . . . 13
Influence
Ambient temperature . . . 117
Information on the document . . . 6
Inlet runs . . . 20
Input . . . 110
Inspection
Installation . . . 28
Received goods . . . 13
Inspection check
Connection . . . 39
Installation . . . 19
Installation conditions
Adapters . . . 22
Down pipe . . . 19
Inlet and outlet runs . . . 20
Installation dimensions . . . 21
Mounting location . . . 19
Orientation . . . 20
Partially filled pipe . . . 19
System pressure . . . 21
Vibrations . . . 22
Installation dimensions . . . 21
Interior cleaning . . . 105

L

Languages, operation options . . . 126
Low flow cut off . . . 114

M

Main electronics module . . . 12
Maintenance tasks . . . 105
Replacing seals . . . 105
Manufacturer ID . . . 53
Manufacturing date . . . 14, 15
Materials . . . 123
Maximum measured error . . . 116
Measured values
Calculated . . . 110
Measured . . . 110
see Process variables
Measuring and test equipment . . . 105
Measuring device
Configuration . . . 57
Conversion . . . 106
Design . . . 12
Disposal . . . 107
Integrating via communication protocol . . . 53
Mounting the sensor . . . 23
Mounting the ground cable/ground disks . . . 24
Mounting the seals . . . 24
Screw tightening torques . . . 24
Preparing for electrical connection . . . 32
Preparing for mounting . . . 23
Removing . . . 107
Repairs . . . 106
Measuring principle . . . 110
Measuring range . . . 110
Measuring system . . . 110

Measuring tube specification 122
Mechanical load 118
Medium temperature range 118
Menu
Diagnostics 98
Operation 85
Setup 57, 58
Menus
For measuring device configuration 57
For specific settings 73
Mounting dimensions
see Installation dimensions
Mounting location 19
Mounting preparations 23
Mounting tools 23

N
Nameplate
Sensor 15
Transmitter 14

O
Operable flow range 112
Operating menu
Menus, submenus 42
Structure 42
Submenus and user roles 43
Operating philosophy 43
Operation 85
Operation options 41
Operational safety 10
Order code 14, 15
Orientation (vertical, horizontal) 20
Outlet runs 20
Output 112
Output signal 112

P
Packaging disposal 18
Parameter settings
Administration (Submenu) 80
Burst configuration 1 to n (Submenu) 55
Current output 1 (Submenu) 59
Device information (Submenu) 101
Diagnostics (Menu) 98
Display (Submenu) 77
Display (Wizard) 65
Electrode cleaning circuit (Submenu) 79
Empty pipe detection (Wizard) 70
HART input (Submenu) 70
Low flow cut off (Wizard) 68
Output conditioning (Wizard) 67
Output values (Submenu) 87
Process variables (Submenu) 85
Pulse/frequency/switch output 1 (Submenu) 61, 62, 64
Sensor adjustment (Submenu) 75
Setup (Menu) 58
Simulation (Submenu) 81
System units (Submenu) 73
Totalizer (Submenu) 86
Totalizer 1 to n (Submenu) 75
Totalizer handling (Submenu) 88
Web server (Submenu) 48
Partially filled pipe 19
Performance characteristics 116
Post-connection check (checklist) 39
Post-installation check 57
Post-installation check (checklist) 28
Potential equalization 34
Power consumption 115
Power supply failure 115
Pressure Equipment Directive 127
Pressure loss 119
Pressure tightness 119
Pressure-temperature ratings 119
Process conditions
Conductivity 118
Flow limit 119
Medium temperature 118
Pressure loss 119
Pressure tightness 119
Process connections 124
Product safety 10
Protecting parameter settings 83

R
Reading measured values 85
Recalibration 105
Reference operating conditions 116
Registered trademarks 8
Remote operation 125
Repair of a device 106
Repairs 106
Notes 106
Repeatability 116
Replacement
Device components 106
Replacing seals 105
Requirements for personnel 9
Return 106

S
Safety 9
Screw tightening torques 24
Sensor
Mounting 23
Serial number 14, 15
Setting the operating language 57
Settings
Adapting the measuring device to the process conditions 88
Administration 80
Advanced display configurations 77
Current output 59
Device reset 101
Device tag 58
Electrode cleaning circuit (ECC) 79

Empty pipe detection (EPD) 70
HART input 70
Low flow cut off 68
Onsite display 65
Operating language 57
Output conditioning 67
Pulse output 61
Pulse/frequency/switch output 60, 62
Resetting the totalizer 88
Sensor adjustment 75
Simulation 81
Switch output 64
System units 73
Totalizer 75
Totalizer reset 88
Shock resistance 118
Signal on alarm 113
SIMATIC PDM 52
Function 52
Software release 53
Spare part 106
Spare parts 106
Special connection instructions 37
Standards and guidelines 127
Status signals 92, 94
Storage conditions 17
Storage temperature 17
Storage temperature range 117
Structure
Operating menu 42
Submenu
Administration 80
Advanced setup 73
Burst configuration 1 to n 55
Current output 1 59
Device information 101
Display 77
Electrode cleaning circuit 79
Event list 99
HART input 70
Measured values 85
Output values 87
Overview 43
Process variables 85
Pulse/frequency/switch output 1 . . . . . 60, 61, 62, 64
Sensor adjustment 75
Simulation 81
System units 73
Totalizer 86
Totalizer 1 to n 75
Totalizer handling 88
Web server 48
Supplementary documentation 128
Supply voltage 115
Surface roughness 124
System design
Measuring system 110
see Measuring device design
System integration 53
System pressure 21

T

Technical data, overview 110
Temperature measurement response time 117
Temperature range
Storage temperature 17
Terminal assignment 31, 33
Terminals 115
Tools
Electrical connection 30
For mounting 23
Transport 17
Totalizer
Configuration 75
Transmitter
Connecting the signal cables 33
Turning the display module 28
Transporting the measuring device 17
Troubleshooting
General 90
Turning the display module 28

U

Use of the measuring device
Borderline cases 9
Incorrect use 9
see Designated use
User interface
Current diagnostic event 98
Previous diagnostic event 98
User roles 43

V

Version data for the device 53
Vibration resistance 118
Vibrations 22

W

W@M 105, 106
W@M Device Viewer 13, 106
Weight
Compact version 121
Transport (notes) 17
Wizard
Define access code 83
Display 65
Empty pipe detection 70
Low flow cut off 68
Output conditioning 67
Workplace safety 10
Write protection
Via access code 83
Via write protection switch 84
Write protection switch 84

www.addresses.endress.com

For more Endress+Hauser product please visit: www.ainstru.com
Mail: Sales@ainstru.com

Endress+Hauser
People for Process Automation