BA00136D/06/EN/15.24-00
71686266
2024-12-15

Valid as of version
V 2.03.XX (device software)

Operating Instructions
Proline Prosonic Flow 93T Portable HART

Portable ultrasonic flow measuring system

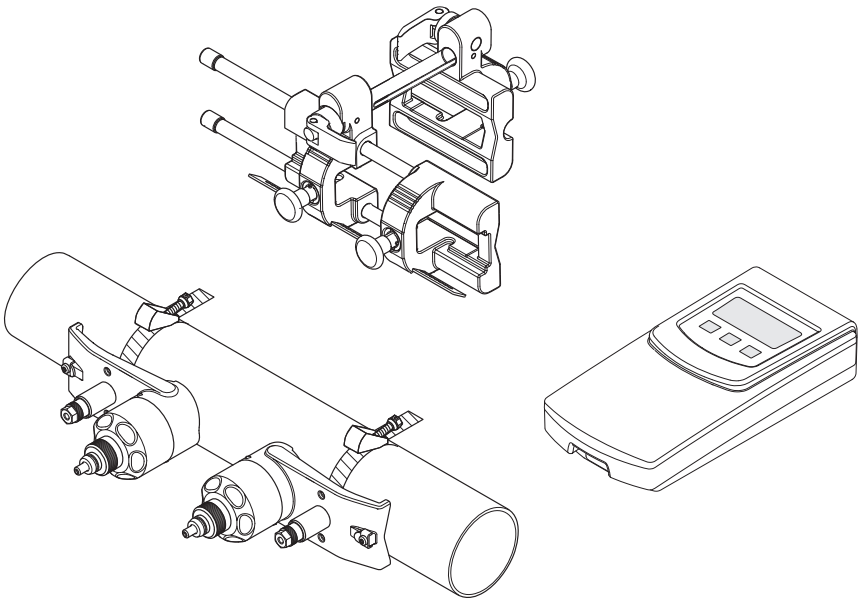

Endress+Hauser
People for Process Automation

Table of contents

1 Safety instructions 4

1.1 Designated use 4
1.2 Installation, commissioning and operation 4
1.3 Operational safety 4
1.4 Return 5
1.5 Notes on safety conventions and icons 5

2 Identification 6

2.1 Device designation 6
2.2 Certificates and approvals 8
2.3 Registered trademarks 8

3 Installation 9

3.1 Incoming acceptance, transport and storage 9
3.2 Installation conditions 9
3.3 Preparatory steps prior to installation 13
3.4 Determining the necessary installation distances 13
3.5 Determining values for installation distances 14
3.6 Mechanical preparation 17
3.7 Installing Prosonic Flow P (DN 15 to 65 / ½ to 2½") 25
3.8 Installing Prosonic Flow P (DN 50 to 4000 / 2 to 160") (Clamp On) 26
3.9 Installing sensor DDU18 31
3.10 Installing sensor DDU20 (wall thickness measurement) 32
3.11 Post-installation check 33

4 Wiring 34

4.1 Charging the NiMH storage battery 34
4.2 Connecting the connecting cable 34
4.3 Cable specification for connecting cable 35
4.4 Potential equalization 35
4.5 Degree of protection 35
4.6 Post-connection check 35

5 Operation 36

5.1 Quick operation guide 36
5.2 Display and operating elements 36
5.3 Brief guide to the function matrix 39
5.4 Error messages 41
5.5 Communication 42

6 Commissioning 43

6.1 Function check 43
6.2 Switching on the measuring device 43
6.3 Commissioning via onsite display 44
6.4 Application-specific commissioning 47
6.5 Using the data logger 48
6.6 Data exchange with Prosonic Flow 93T 48
6.7 Site Manager 49

7 Maintenance 51

7.1 General 51
7.2 Charging the device 51

8 Accessories 52

9 Troubleshooting 54

9.1 Troubleshooting instructions 54
9.2 System error messages 54
9.3 Process error messages 57
9.4 Process errors without messages 58
9.5 Response of outputs to errors 59
9.6 Spare parts 59
9.7 Return 59
9.8 Disposal 59
9.9 Software history 59

10 Technical data 60

10.1 Quick technical data guide 60

11 Description of Device Functions 69

11.1 Function matrix 69
11.2 Function matrix of Prosonic Flow 93T Portable 71
11.3 Block MEASURED VARIABLES 73
11.4 Block QUICK SETUP 76
11.5 Block USER INTERFACE 78
11.6 Block TOTALIZER 91
11.7 Block OUTPUTS 93
11.8 Block INPUTS 107
11.9 Block BASIC FUNCTIONS 109
11.10 Block SUPERVISION 121

12 Factory settings 125

12.1 SI units (not for USA and Canada) 125
12.2 US units (for USA and Canada only) 125

Index 126

1 Safety instructions

1.1 Designated use

The measuring device described in these Operating Instructions is to be used only for measuring the flow rate of liquids in closed pipes.

Examples:
- Acids, alkalis, paints, oils
- Liquid gas
- Ultrapure water with low conductivity, water, wastewater

As well as measuring the volume flow, the sound velocity of the fluid is also always measured. Different fluids can be distinguished or the fluid quality can be monitored.

The designated operation of the measuring device is battery operation without connection to the charger.

Resulting from incorrect use or from use other than that designated the operational safety of the measuring devices can be suspended. The manufacturer accepts no liability for damages being produced from this.

1.2 Installation, commissioning and operation

Note the following points:
- Installation, connection to the electricity supply, commissioning and maintenance of the device must be carried out by trained, qualified specialists authorized to perform such work by the facility's owner-operator.
  The specialist must have read and understood these Operating Instructions and must follow the instructions they contain.
- The device must be operated by persons authorized and trained by the facility's owner-operator. Strict compliance with the instructions in these Operating Instructions is mandatory.
- Endress+Hauser is willing to assist in clarifying the chemical resistance properties of parts wetted by special fluids, including fluids used for cleaning.
  However, small changes in temperature, concentration or the degree of contamination in the process can result in changes to the corrosion resistance properties. Therefore, Endress+Hauser cannot guarantee or accept liability for the corrosion resistance properties of wetted materials in a specific application.
  The user is responsible for choosing suitable wetted materials in the process.
- The storage batteries for the device may only be charged with the charger supplied. Other equipment could cause the battery to overheat (risk of fire!).
- Invariably, local regulations governing the opening and repair of electrical devices apply.

1.3 Operational safety

Note the following points:
- The transmitter having the ingress protection IP 40 is intended for operation in dry, clean and non-hazardous environment. Mechanical stresses are to be avoided.
- The measuring device complies with the general safety requirements in accordance with EN 61010-1 and the EMC requirements of IEC/EN 61326 during storage battery operation.
- The manufacturer reserves the right to modify technical data without prior notice. Your Endress+Hauser distributor will supply you with current information and updates to these Operating Instructions.

1.4 Return

The following procedures must be carried out before a flowmeter requiring repair or calibration, for example, is returned to Endress+Hauser:

- Always enclose a duly completed "Declaration of Contamination" form.
  Only then Endress+Hauser can transport, examine and repair a returned device.

  Note!
  You will find a preprinted "Declaration of Contamination" form at the back of this manual.

- Enclose special handling instructions if necessary, for example a safety data sheet as per EC REACH Regulation No. 1907/2006.
- Remove all residues. Pay special attention to the grooves for seals and crevices which could contain residues. This is particularly important if the substance is hazardous to health, e.g. flammable, toxic, caustic, carcinogenic, etc.

Warning!

- Do not return a measuring device if you are not absolutely certain that all traces of hazardous substances have been removed, e.g. substances which have penetrated crevices or diffused through plastic.
- Costs incurred for waste disposal or injury (burns, etc.) due to inadequate cleaning will be charged to the owner-operator.

1.5 Notes on safety conventions and icons

The devices can, however, be a source of danger if used incorrectly or for anything other than the designated use. Consequently, always pay particular attention to the safety instructions indicated in these Operating Instructions by the following icons:

The devices are designed to meet state-of-the-art safety requirements, have been tested, and left the factory in a condition in which they are safe to operate. The devices comply with the applicable standards and regulations in accordance with EN 61010-1 "Safety requirements for electrical equipment for measurement, control and laboratory use".

Warning!
"Warning" indicates an action or procedure which, if not performed correctly, can result in injury or a safety hazard. Comply strictly with the instructions and proceed with care.

Caution!
"Caution" indicates an action or procedure which, if not performed correctly, can result in incorrect operation or destruction of the device. Comply strictly with the instructions.

Note!
"Note" indicates an action or procedure which, if not performed correctly, can have an indirect effect on operation or trigger an unexpected response on the part of the device.

2 Identification

2.1 Device designation

The "Prosonic Flow 93T" flowmeter system consists of the following components:
- Prosonic Flow 93 transmitter
- Sensor:
  - Prosonic Flow P Clamp On version (DN 15 to 65 / ½ to 2½")
  - Prosonic Flow P Clamp On version (DN 50 to 4000 / 2 to 160")

The transmitter and the sensor are connected by a cable.

2.1.1 Nameplate of the transmitter

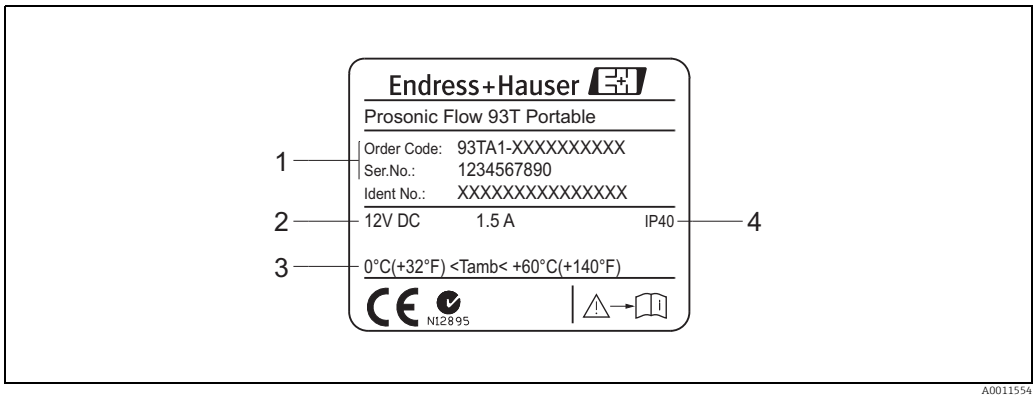

Fig. 1: Nameplate specifications for the "Prosonic Flow 93T" transmitter (example)

1 Order code/serial number: See the specifications on the order confirmation for the meanings of the individual letters and digits
2 Power supply/power consumption
3 Permitted ambient temperature range
4 Degree of protection

2.1.2 Nameplate of the sensor

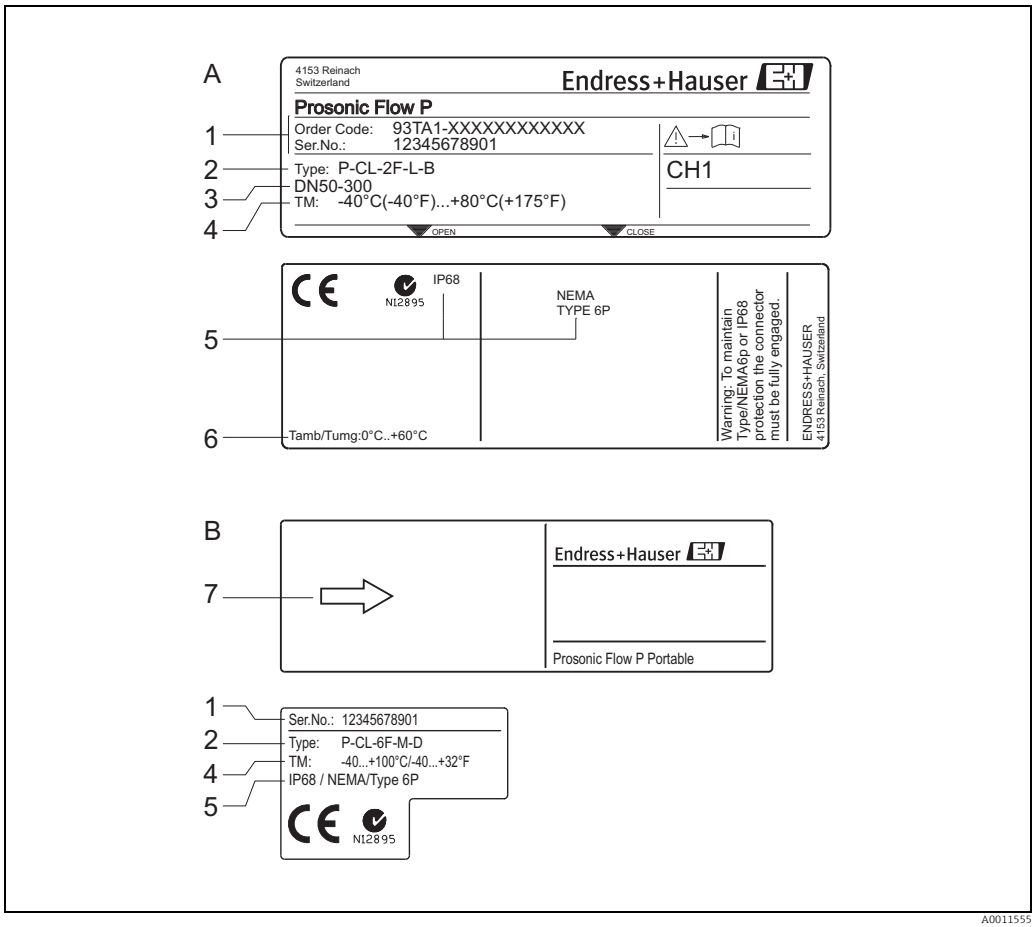

Fig. 2: Nameplate specifications for the "Prosonic Flow P" sensor (example)

A Sensor DN 50 to 300 (2 to 12") and DN 100 to 4000 (4 to 160")
B Sensor DN 15 to 65 (½ to 2½")

1 Order code/serial number: See the specifications on the order confirmation for the meanings of the individual letters and digits
2 Sensor type
3 Nominal diameter range
4 Max. fluid temperature
5 Degree of protection
6 Permitted ambient temperature range
7 Flow direction

2.2 Certificates and approvals

The devices are designed in accordance with good engineering practice to meet state-of-the-art safety requirements, have been tested, and left the factory in a condition in which they are safe to operate.

The devices comply with the applicable standards and regulations in accordance with EN 61010-1 "Safety requirements for electrical equipment for measurement, control and laboratory use" and with the EMC requirements of IEC/EN 61326.

The measuring system described in these Operating Instructions thus complies with the statutory requirements of the EC Directives. Endress+Hauser confirms successful testing of the device by affixing to it the CE mark.

The measuring system complies with the EMC requirements of the "Australian Communications and Media Authority (ACMA)".

2.3 Registered trademarks

HART®
Registered trademark of HART Communication Foundation, Austin, USA.

FieldCare®, Applicator®
Registered or registration-pending trademarks of Endress+Hauser Flowtec AG, Reinach, CH.

3 Installation

3.1 Incoming acceptance, transport and storage

3.1.1 Incoming acceptance

On receipt of the goods, check the following points:
- Check the packaging and the contents for damage.
- Check the shipment, make sure nothing is missing and that the scope of supply matches your order.

3.1.2 Transport

The devices must be transported in the container supplied when transporting them to the measuring point.

3.1.3 Storage

- Pack the measuring device in such a way as to protect it reliably against impact for storage (and transportation). The original packaging provides optimum protection.
- The storage temperature corresponds to the ambient temperature range of the transmitter, the sensors and the corresponding sensor cables (→ 📄 64).
- The measuring device must be protected against direct sunlight during storage in order to avoid unacceptably high surface temperatures.

3.2 Installation conditions

3.2.1 Dimensions

The dimensions and lengths of the sensor and transmitter are provided in the separate "Technical Information" document on the device in question. This can be downloaded as a PDF file from www.endress.com.
A list of the "Technical Information" documents available is provided on → 📄 68.

3.2.2 Mounting location

Correct flow measurement is possible only if a pipe is full. It is preferable to install the sensors in a riser.

Note!
Entrained air or gas bubbles in the measuring tube can result in an increase in measuring errors.
For this reason, avoid the following mounting locations:
- Highest point of a pipeline. Risk of air accumulating.
- Directly upstream of a free pipe outlet in a vertical pipe. Risk of partial pipe filling.

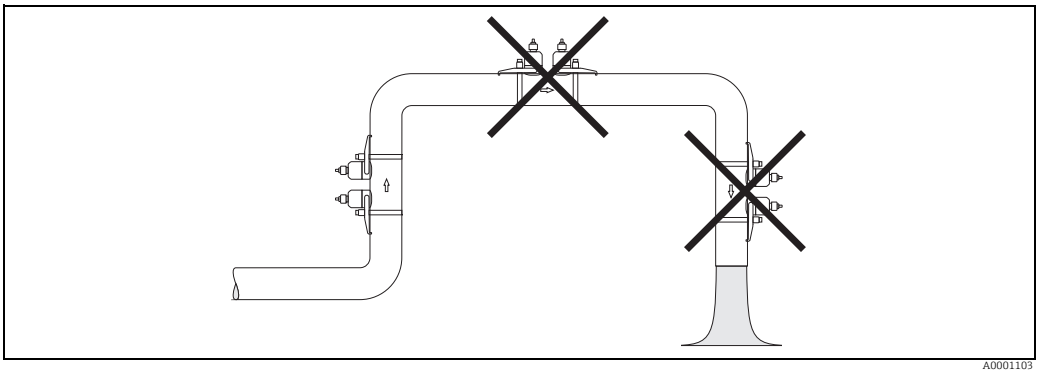

Fig. 3: Mounting location

3.2.3 Orientation

Vertical

Recommended orientation with upward direction of flow (View A). With this orientation, entrained solids will sink and gases will rise away from the sensor when the fluid is stagnant. The piping can be completely drained and protected against solids buildup.

Horizontal

In the recommended installation range in a horizontal installation position (View B), gas and air collections at the pipe cover and problematic deposits at the bottom of the pipe have a smaller influence on measurement.

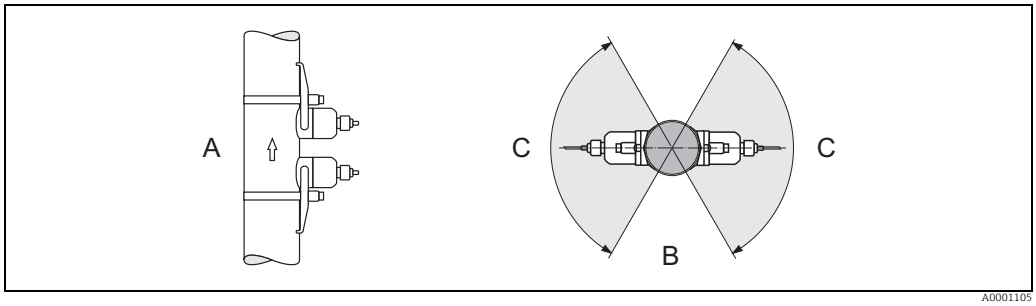

Fig. 4: Recommended orientation and recommended installation range

A Recommended orientation with upward direction of flow
B Recommended installation range with horizontal orientation
C Recommended installation range max. 120°

3.2.4 Inlet and outlet run

If possible, install the sensor well clear of fittings such as valves, T-pieces, elbows, etc. Compliance with the following inlet and outlet runs is required in order to ensure measuring accuracy.

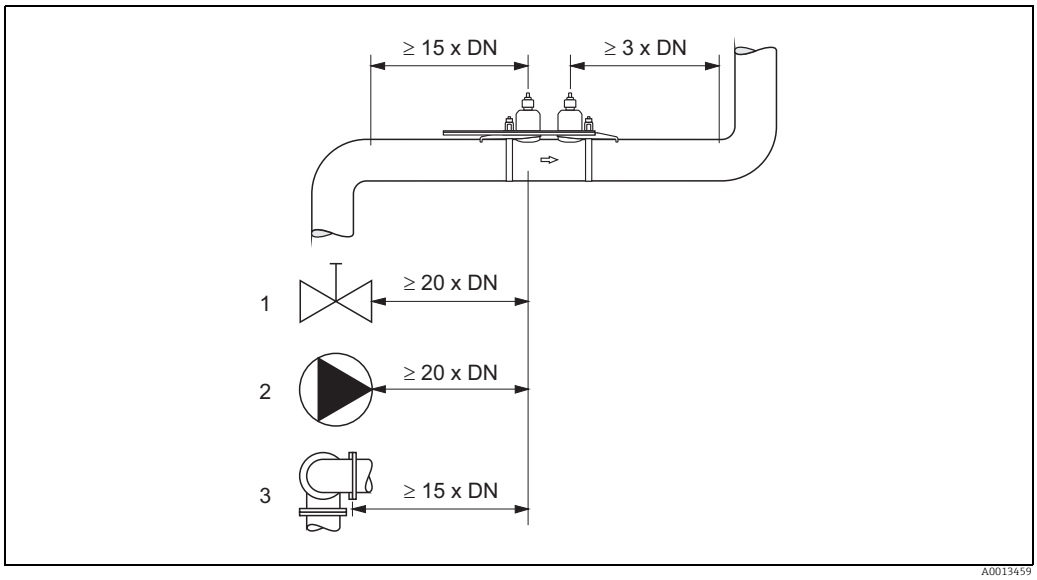

Fig. 5: Inlet and outlet run

1 Valve (2/3 open)
2 Pump
3 Two pipe bends in different directions

3.2.5 Sensor selection and arrangement

The sensors can be arranged differently:
- Mounting arrangement for measurement via one traverse: the sensors are located on opposite sides of the pipe.
- Mounting arrangement for measurement via two traverses: the sensors are located on the same side of the pipe.

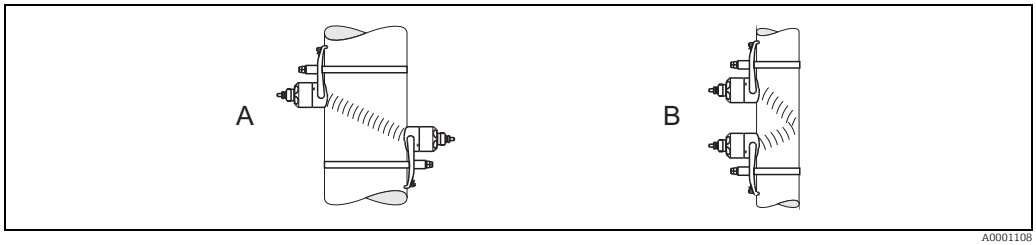

Fig. 6: Sensor mounting arrangement

A Mounting arrangement for measurement via one traverse
B Mounting arrangement for measurement via two traverses

The number of traverses required depends on the sensor type, the nominal diameter and the thickness of the pipe wall. We recommend the following types of mounting:

Sensor Type	Nominal Diameter	Sensor Frequency	Sensor ID	Type of Mounting [1]
Prosonic Flow P	DN 15 to 65 (½ to 2½")	6 MHz	P-CL-6F*	2 (or 1) traverses [4]
	DN 50 to 65 (2 to 2½")	6 MHz (or 2 MHz)	P-CL-6F* P-CL-2F*	2 (or 1) traverses [2]
	DN 80 (3")	2 MHz	P-CL-2F*	2 traverses
	DN 100 to 300 (4 to 12")	2 MHz (or 1 MHz)	P-CL-2F* P-CL-1F*	2 traverses [3]
	DN 300 to 600 (12 to 24")	1 MHz (or 2 MHz)	P-CL-1F* P-CL-2F*	2 traverses [3]
	DN 650 to 4000 (26 to 160")	1 MHz (or 0.5 MHz)	P-CL-1F* W-CL-05F*	1 traverse [3]

[1] The installation of clamp-on sensors is principally recommended in the 2 traverse type installation. This type of installation allows the easiest and most comfortable type of mounting and means that a system can also be mounted even if the pipe can only be accessed from one side. However, in certain applications a 1 traverse installation may be preferred. These include:
- Certain plastic pipes with wall thickness > 4 mm (0.16")
- Pipes made of composite materials such as GRP
- Lined pipes
- Applications with fluids with high acoustic damping

[2] If the pipe nominal diameter is small (DN 65 / 2½" and smaller), the sensor spacing with Prosonic Flow P can be too small for two traverse installation using sensor P-CL-2F*. In this case, the 1 traverse type of installation must be used.

[3] 0.5 MHz sensors (Prosonic Flow W) are also recommended for applications with composite material pipes such as GRP and may be recommended for certain lined pipes, pipes with wall thickness > 10 mm (0.4"), or applications with media with high acoustic damping. In addition, for these applications we principally recommend mounting the W sensors in a 1 traverse configuration.

[4] 6 MHz sensors for applications with flow velocity < 10 m/s.

3.3 Preparatory steps prior to installation

Depending on the conditions specific to the measuring point (e.g. Clamp On, number of traverses, fluid, etc.), a number of preparatory steps have to be taken before actually installing the sensors:

1. Determination of the values for the necessary installation distances based on the conditions specific to the measuring point. A number of methods are available for determining the values:
   – Local operation of the device
   – Applicator (software), online on the Endress+Hauser Internet site
2. Mechanical preparation of the Clamp On holders for the sensors:
   – Mount the sensor holder (DN 15 to 65 / ½ to 2½")
   – Premount the strapping bands (DN 50 to 200 / 2 to 8") or (DN 250 to 4000 / 10 to 160")

3.4 Determining the necessary installation distances

The installation distances that have to be maintained depend on:
- The type of sensor: Prosonic Flow P DN 50 to 4000 (2 to 160") or DN 15 to 65 (½ to 2½")
- The type of mounting: Clamp On with strapping band
- Number of traverses or single-path/dual-path version

3.4.1 Installation distances for Prosonic Flow P

DN 50 to 4000 (2 to 160")		DN 15 to 65 (½ to 2½")	
1 traverse	2 traverses	1 traverse	2 traverses
SENSOR DISTANCE	SENSOR DISTANCE	SENSOR DISTANCE*	
WIRE LENGTH	POSITION SENSOR	POSITION SENSOR*	
* In the SENSOR DISTANCE function, the distance is indicated in millimeters. The POSITION SENSOR function displays the values for using the mounting rail (e.g. A3).			

3.5 Determining values for installation distances

3.5.1 Determining installation distances via local operation

Perform the following steps to determine the installation distances:

1. Connect and switch on the transmitter.
2. Run the "Sensor Installation" Quick Setup menu.

Connecting and switching on the transmitter

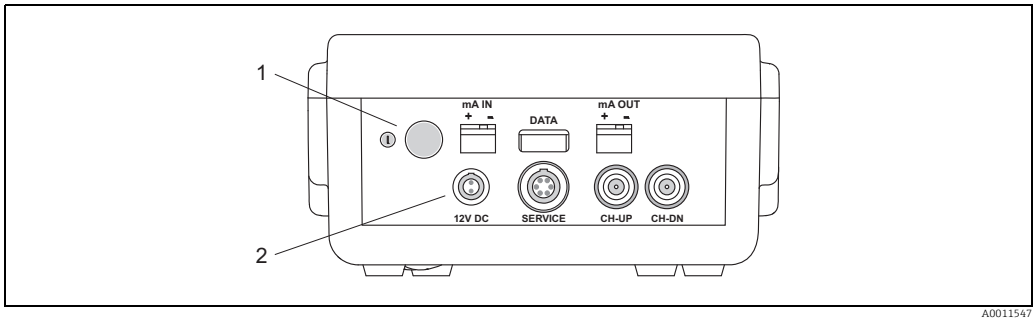

Fig. 7: Connecting and switching on the transmitter

1 On/off switch (press switch ≥ 3 seconds)
2 Charger connection (different adapters are available for the connection)

Running the "Sensor Installation" Quick Setup menu

Note!

- If you are not familiar with the operation of the device → 📄 36.
- The following section only describes the steps necessary for Clamp On type of mounting within the "Sensor Installation" Quick Setup.

Running the Quick Setup for Clamp On type of mounting

1. Enter or select installation-specific values or the values specified here.
2. Read off the installation distances necessary for mounting.

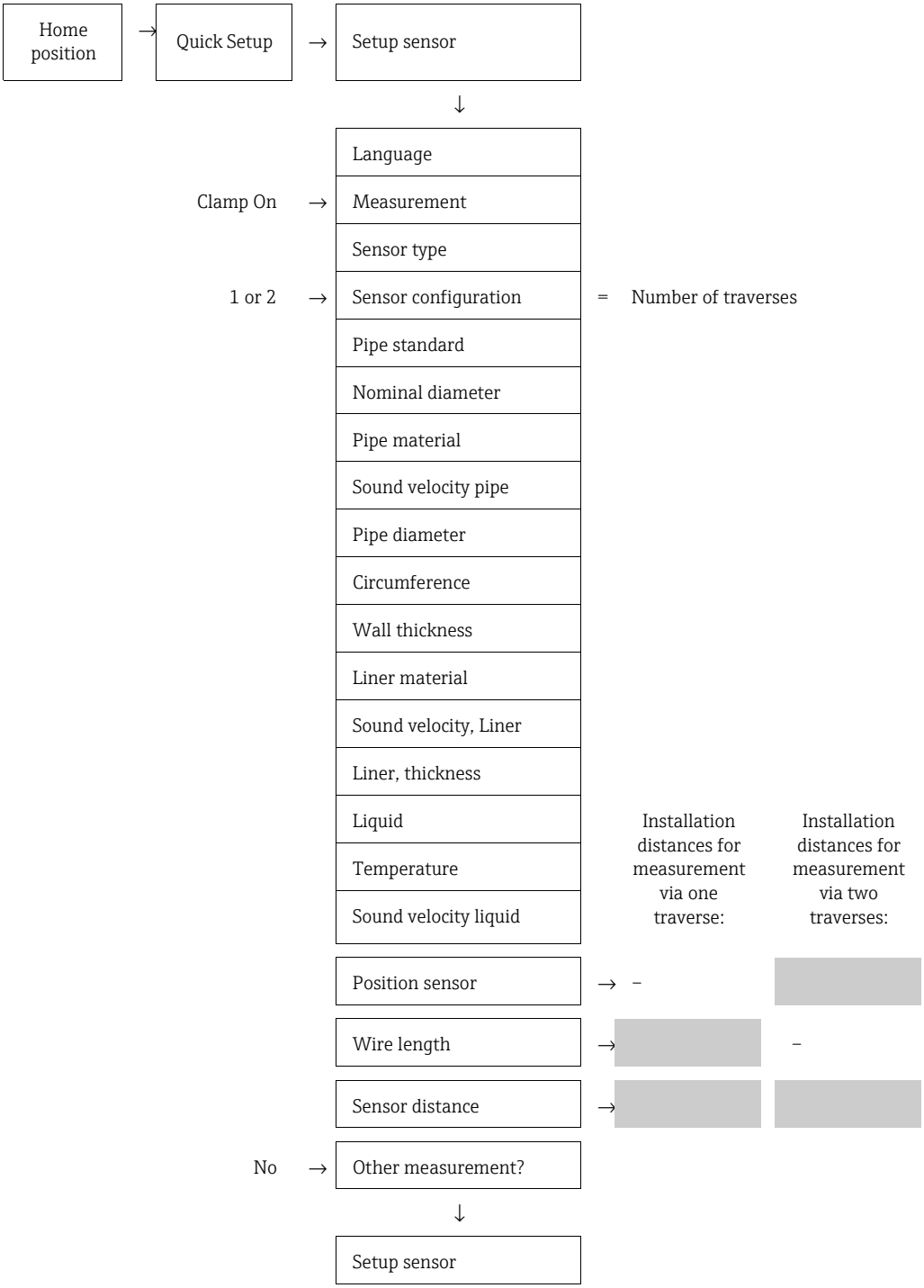

Subsequent procedure

The sensors can be installed once the installation distances have been determined:
- Prosonic Flow P (DN 15 to 65 / ½ to 2½")→ 📄 25
- Prosonic Flow P (DN 50 to 4000 / 2 to 160")→ 📄 25

3.5.2 Determining installation distances via Applicator

Applicator is a software application for selecting and planning flowmeters. The installation distances required for installation can be determined without having to connect the transmitter beforehand.

Applicator is available:
- On a CD-ROM for installation on a local PC → 📄 53.
- Via the Internet for direct online entry → www.endress.com → select country.
  On the Internet site, select → Instruments → Flow → Tooling → Applicator. In the "Applicator Sizing Flow" field, select the "Start Applicator Sizing Flow online" link.

Determining installation distances for Clamp On, measuring via one traverse

Determine the installation distances required via Applicator:
- Select the fluid.
- Select the device (e.g. 93P Clamp On).
- Enter or select measuring point-specific values.
- Select the number of traverses: 1
- Read off the necessary installation distances:
  - Wire length: _____
  - Sensor distance: _____

Subsequent procedure

The mechanical preparation tasks can be performed once the installation distances have been determined → 📄 13.

Determining installation distances for Clamp On, measuring via two traverses

Determine the installation distances required via Applicator:
- Select the fluid.
- Select the device (e.g. 93P Clamp On).
- Enter or select measuring point-specific values.
- Select the number of traverses: 2
- Read off the necessary installation distances:
  - Sensor position: _____
  - Sensor distance: _____

Subsequent procedure

The mechanical preparation tasks can be performed once the installation distances have been determined → 📄 13.

3.6 Mechanical preparation

The way in which the sensors are secured differs on account of the pipe nominal diameter and the sensor type. Depending on the type of sensor, users also have the option of securing the sensors with strapping bands or screws such that they can be later removed, or permanently fixing the sensors in place with welded bolts or welded holders.

Overview of possible ways to secure the various sensors:

Sensor	For the measuring range	Pipe nominal diameter	Secured by
P	DN 15 to 65 (½ to 2½")	DN 15 to 65 (½ to 2½")	Sensor holder → 25
P	DN 50 to 4000 (2 to 160")	DN ≤ 200 (8")	Strapping bands (metal, medium nominal diameters) → 22
		DN > 200 (8")	Strapping bands (metal, large nominal diameters) → 23
		DN 50 to 4000 (2 to 160")	Mounting with strapping bands (flexible) → 24

3.6.1 Mounting the sensor holder

- Sensor: Prosonic Flow (DN 15 to 65 / ½ to 2½")
- Sensor holder: Model 1 or 2

Model 1

1. Set the sensor distance determined (e.g. A19) on the sensor holder.
   – Release the screws of the sensor holders.
   – Position the sensor holders with the aid of the mounting rail.
   – Tighten the screws of the sensor holders again.

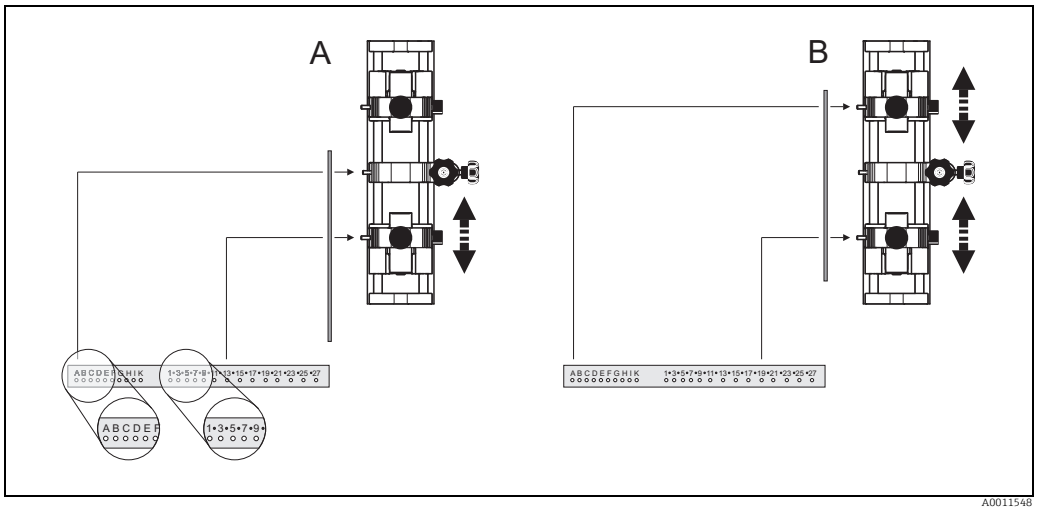

Fig. 8: Setting the sensor distance with the mounting rail (value from POSITION SENSOR function)

A Sensor distance for measurement via one traverse
B Sensor distance for measurement via two traverses

2. Guide the sensor holder over the pipe.

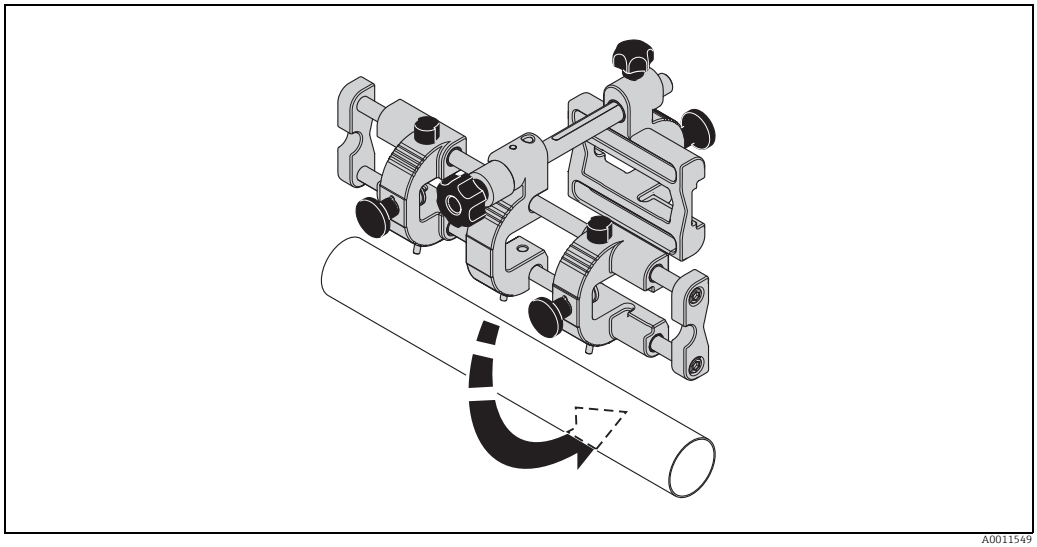

Fig. 9: Setting the sensor holder on the pipe

3. Release the screw of the retaining bracket (a) and push the retaining bracket up against the pipe.

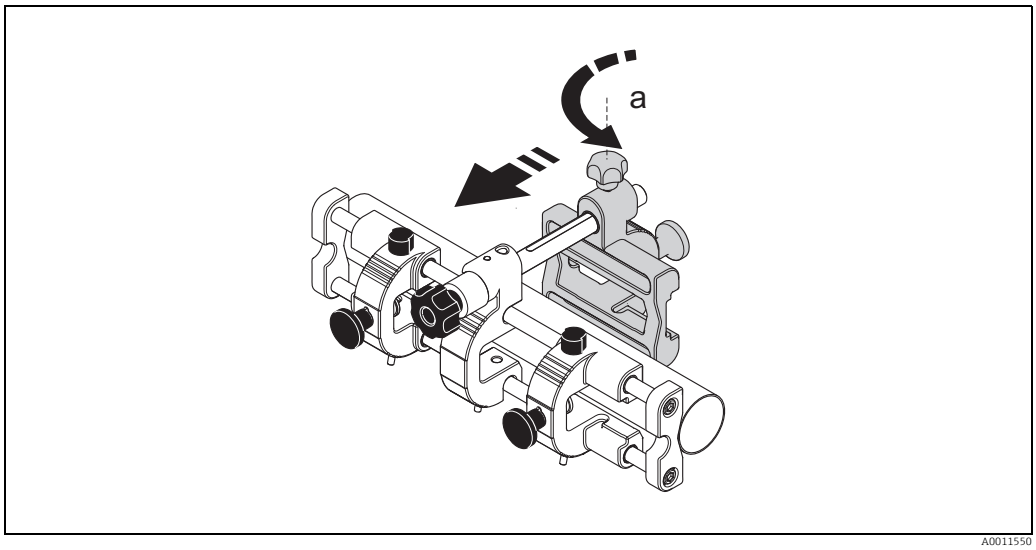

Fig. 10: Guiding the retaining bracket onto the pipe

a Screw of retaining bracket

4. Fix the sensor holder in place by:
   – Tightening the screw of the retaining bracket (a)
   – Tightening the tensioning screw (b)

   ⚠ Warning!
   Risk of damaging plastic or glass pipes if the screws are tightened too much! The use of a metal half-shell is recommended (on the opposite side of the tensioning screw) when working with plastic or glass pipes.

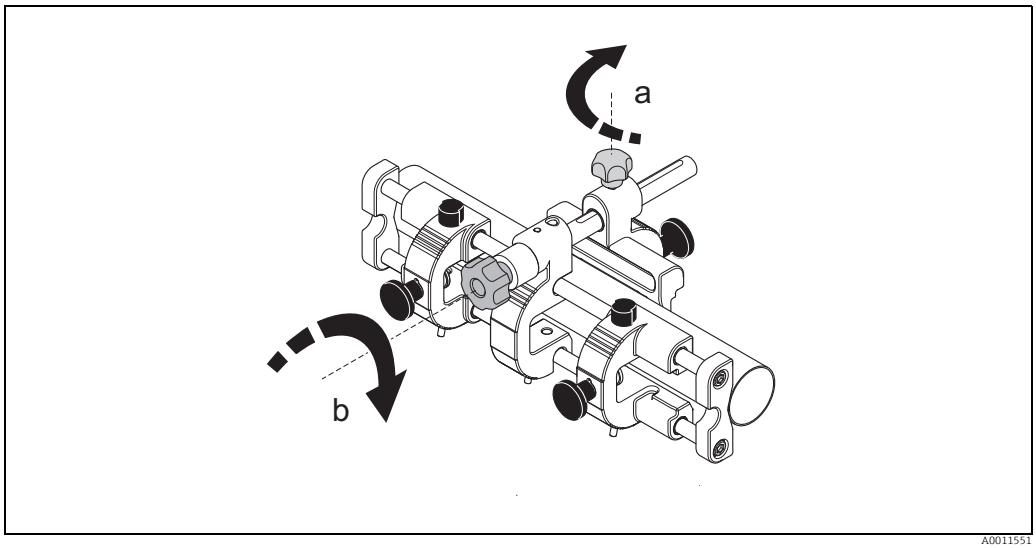

Fig. 11: Fixing the sensor holder

a Screw of retaining bracket
b Tensioning screw

Model 2

1. Set the sensor distance determined (e.g. C9) on the sensor holder.
   – Position the sensor holders with the aid of the mounting rail.

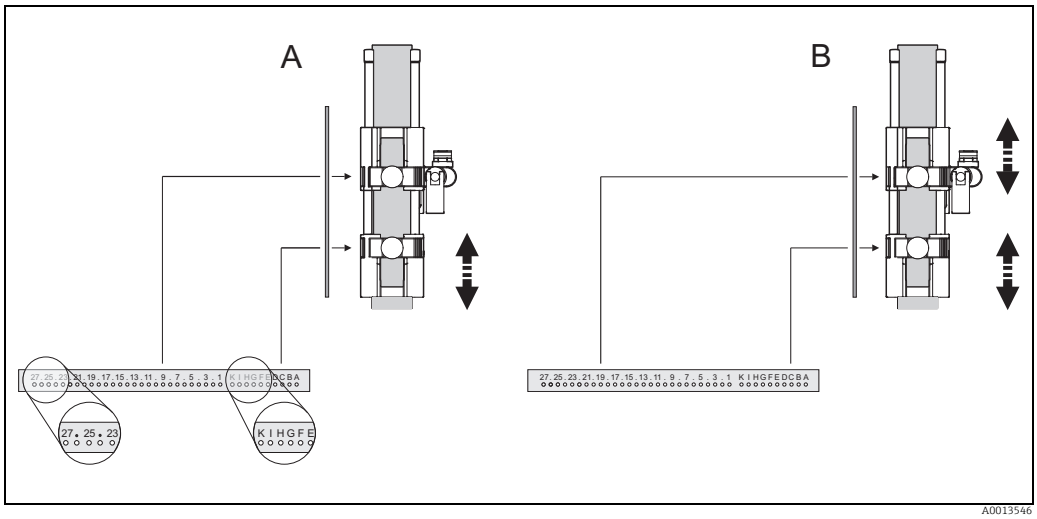

Fig. 12: Setting the sensor distance with the mounting rail (value from POSITION SENSOR function)

A Sensor distance for measurement via one traverse
B Sensor distance for measurement via two traverses

2. Guide the sensor holder over the pipe.

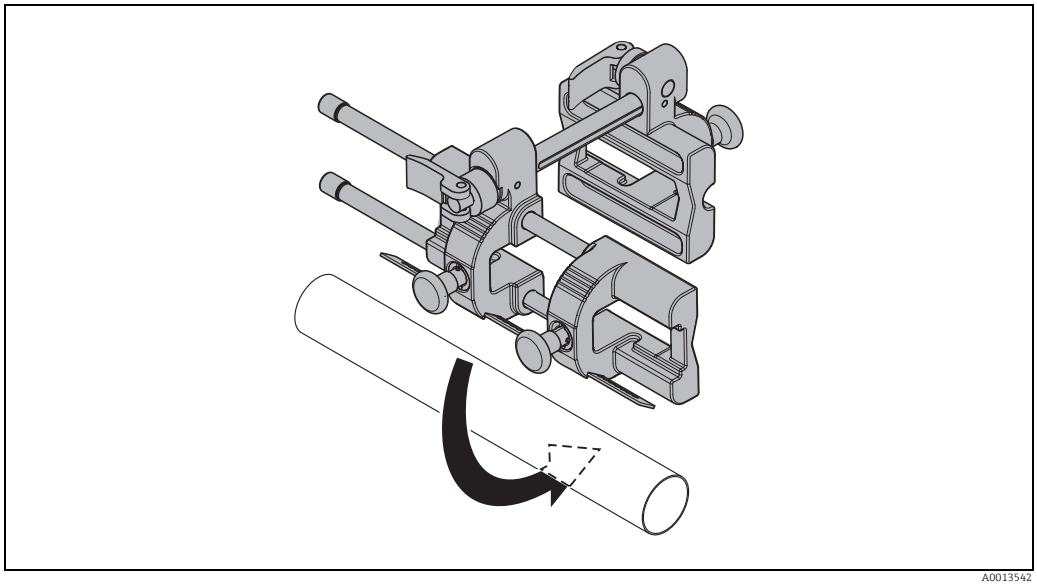

Fig. 13: Setting the sensor holder on the pipe

3. Release the quick release of the retaining bracket (a) and push the retaining bracket up against the pipe.

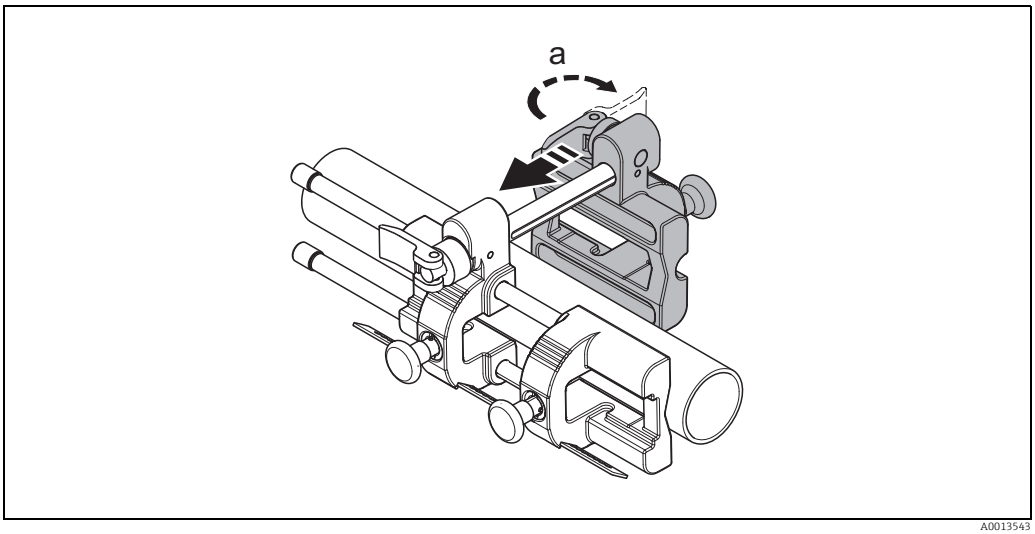

A0013543

Fig. 14: Guiding the retaining bracket onto the pipe

a Quick release of retaining bracket

4. Fix the sensor holder in place by:
   – Tightening the quick release of the retaining bracket (a)
   – Tightening the quick release (b)

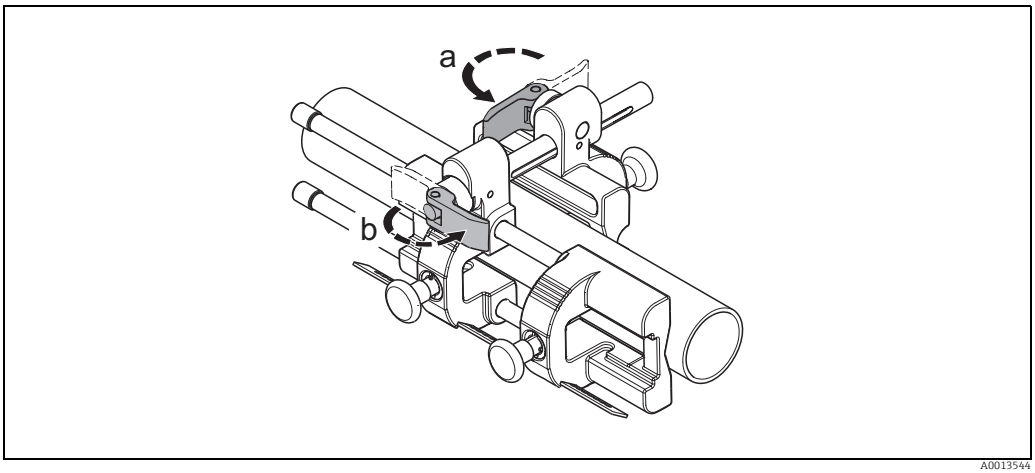

A0013544

Fig. 15: Fixing the sensor holder

a Quick release of retaining bracket
b Quick release

3.6.2 Premounting the strapping bands (metal, medium nominal diameters)

When mounting on a pipe with a nominal diameter of DN ≤ 200 (8").

Sensor: Prosonic Flow P (DN 50 to 4000 / 2 to 160")

Note!
Sensor orientation shown in the following sketches is for visual purposes only.
Please apply the recommended orientation → 📄 10.

Procedure

First strapping band

1. Fit the mounting bolt over the strapping band.
2. Wrap the strapping band around the pipe without twisting it.
3. Guide the end of the strapping band through the strapping band lock (tensioning screw is pushed up).
4. Tighten the strapping band as tight as possible by hand.
5. Set the strapping band to the desired position.
6. Push down the tensioning screw and tighten the strapping band so that it cannot slip.

Second strapping band

7. Proceed as for the first strapping band (steps 1 to 7). Only slightly tighten the second strapping band for final mounting. It must be possible to move the strapping band for final alignment.

Both strapping bands

8. Where necessary, shorten the strapping bands and trim the cut edges.

   ⚠ Warning!
   Risk of injury. To avoid sharp edges, trim the cut edges after shortening the strapping bands.

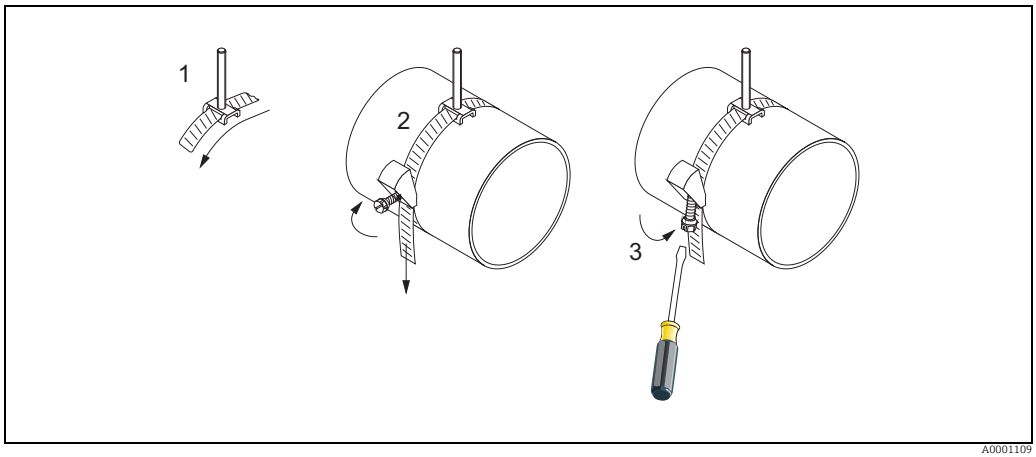

Fig. 16: Premounting strapping bands for pipe diameters DN ≤ 200 (8")

1 Mounting bolt
2 Strapping band
3 Tensioning screw

3.6.3 Premounting the strapping bands (metal, large nominal diameters)

When mounting on a pipe with a nominal diameter of DN > 200 (8").

Sensor: Prosonic Flow P (DN 50 to 4000 / 2 to 160")

Procedure

1. Measure the pipe circumference.
2. Shorten the strapping bands to one length (pipe circumference + 10 cm / 3.94") and trim the cut edges.

   ⚠ Warning!
   Risk of injury. To avoid sharp edges, trim the cut edges after shortening the strapping bands.

First strapping band

3. Fit the centering plate along with the mounting bolt over the strapping band.
4. Wrap the strapping band around the pipe without twisting it.
5. Guide the end of the strapping band through the strapping band lock (tensioning screw is pushed up).
6. Tighten the strapping band as tight as possible by hand.
7. Set the strapping band to the desired position.
8. Push down the tensioning screw and tighten the strapping band so that it cannot slip.

Second strapping band

9. Proceed as for the first strapping band (steps 3 to 8). Only slightly tighten the second strapping band for final mounting. It must be possible to move the strapping band for final alignment.

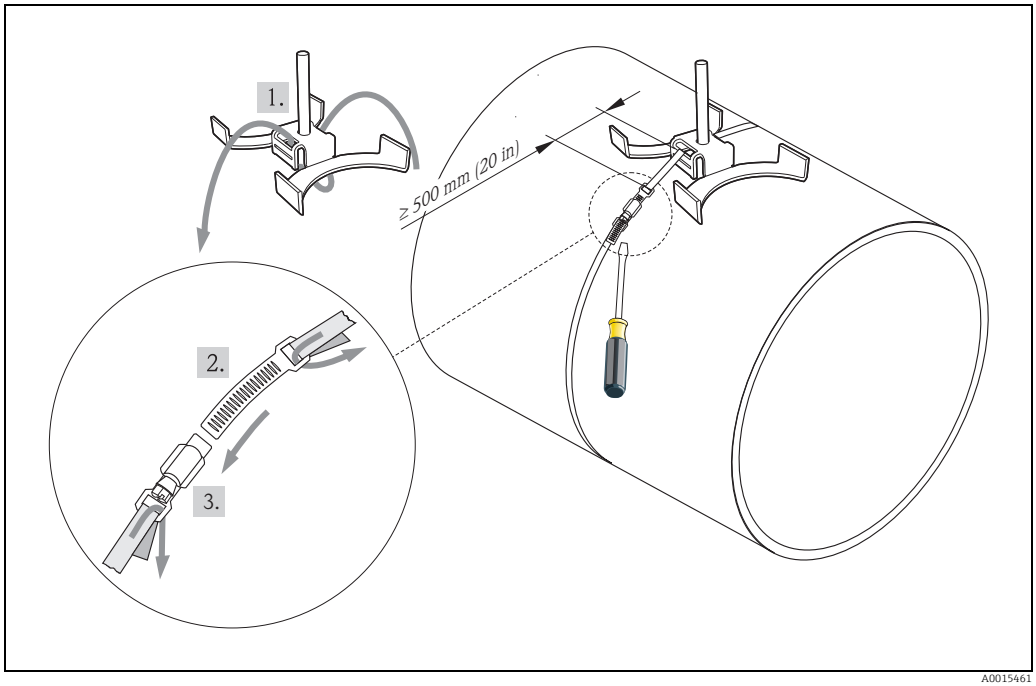

Fig. 17: Premounting strapping bands for pipe diameters DN > 200 (8")

1 Mounting bolt with centering holder alignment
2 Strapping band
3 Tensioning screw

3.6.4 Mounting with strapping bands (flexible)

For sensor Prosonic Flow P (DN 50 to 4000 / 2 to 160")

Caution!
- Each time you use the strapping bands, check that the ratchet locks and springs function safely beforehand.
- Inspect the strapping bands for damage.

Procedure

Closing the strapping band lock

1. Fit the mounting bolt onto the strapping band.
2. Guide the strapping band around the pipe making sure it is not twisted in the process and, with the ratchet lock (a) open, push the end through the slot. Pretension manually by pulling on the free end of the strapping band.

   Note!
   If you do not pretension the bands it is more difficult to release the strapping bands.
3. Tension continuously by moving the lever back and forth (b) until the strapping band is optimally tensioned.
4. Then push down the lever (c).

   Caution!
   The tensioning clamp (d) must engage on both sides!

Opening the strapping band lock

1. Pull back the lever lock (e) while simultaneously opening the lever 180° (f) until the lever lock (g) is engaged.
2. Remove the strapping band.

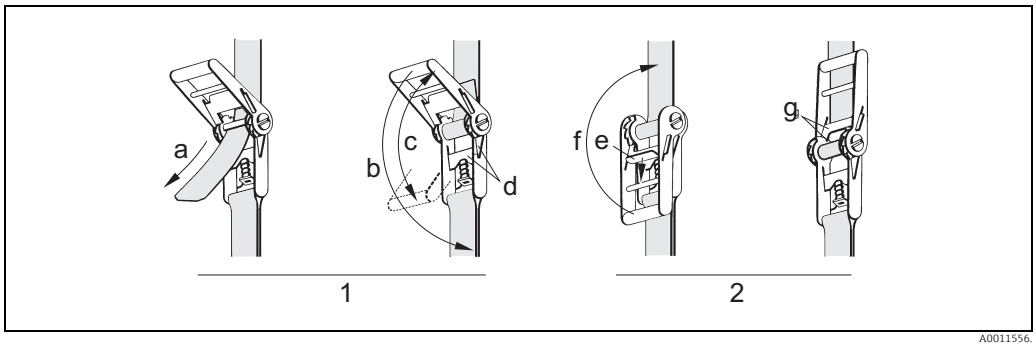

Fig. 18: Strapping band lock

1 Closing the strapping band lock
2 Opening the strapping band lock

3.7 Installing Prosonic Flow P (DN 15 to 65 / ½ to 2½")

3.7.1 Mounting the sensor

Prerequisites

- The sensor holder is already mounted → 18.
- The distance of the sensor holder is set (sensor distance) → 13.

Material

The following material is needed for mounting:
- Sensor
- Connecting cable

Note!
Prior to mounting, connect the connecting cables to the sensors.

Procedure

1. Coat the contact surfaces (1) of the sensors with an even layer of coupling fluid approx. 1 mm (0.04") thick.

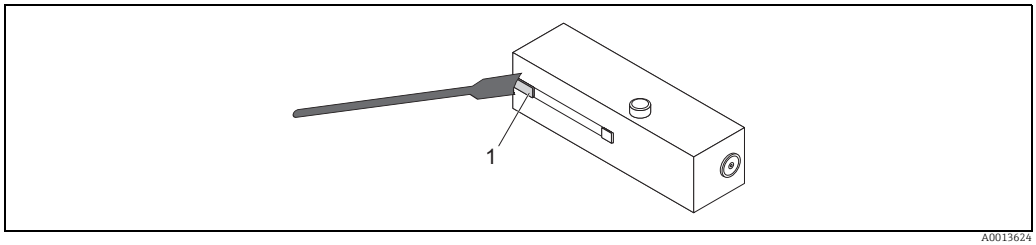

Abb. 19: Coating with coupling fluid

2. Mount as illustrated in the graphic (steps 1 to 5):

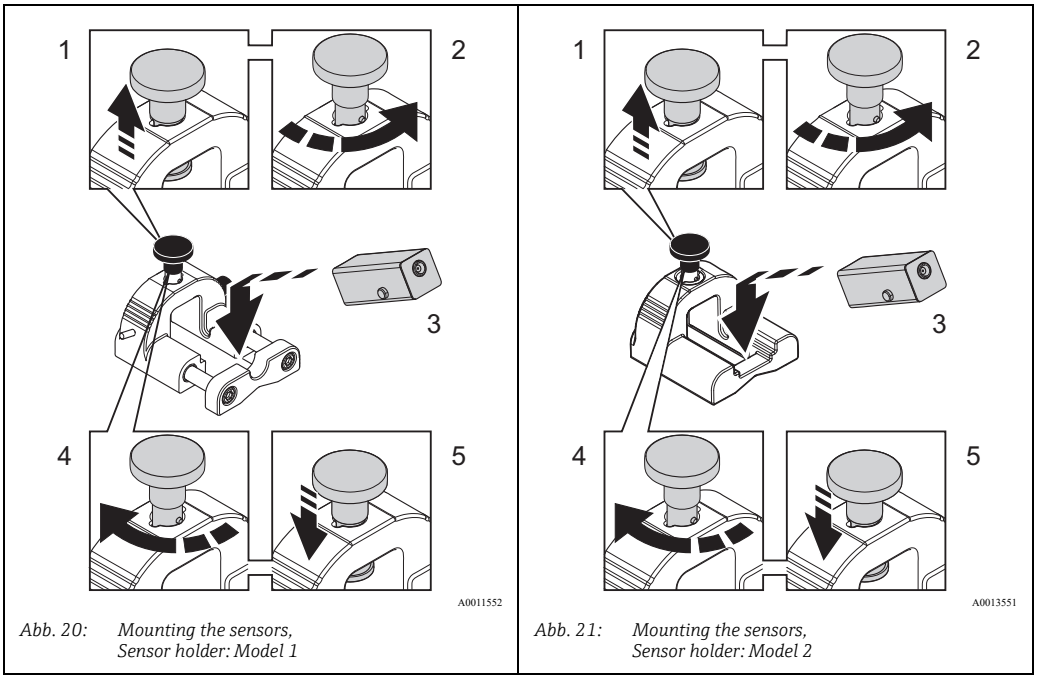

Abb. 20: Mounting the sensors, Sensor holder: Model 1

Abb. 21: Mounting the sensors, Sensor holder: Model 2

This completes the mounting process. The sensors can now be connected to the transmitter via the connecting cables → 34.

3.8 Installing Prosonic Flow P (DN 50 to 4000 / 2 to 160") (Clamp On)

3.8.1 Installation for measurement via one traverse

Prerequisites

- The installation distances (sensor distance and wire length) are known → 13.
- The strapping bands are already mounted → 22.

Material

The following material is needed for mounting:
- Two strapping bands incl. mounting bolts and centering plates where necessary (already mounted → 17)
- Two measuring wires, each with a cable lug and a fixer to position the strapping bands
- Two sensor holders
- Coupling fluid for an acoustic connection between the sensor and pipe
- Two sensors incl. connecting cables

Procedure

1. Prepare the two measuring wires:
   - Arrange the cable lugs and fixer such that the distance they are apart corresponds to the wire length (SL).
   - Screw the fixer onto the measuring wire.

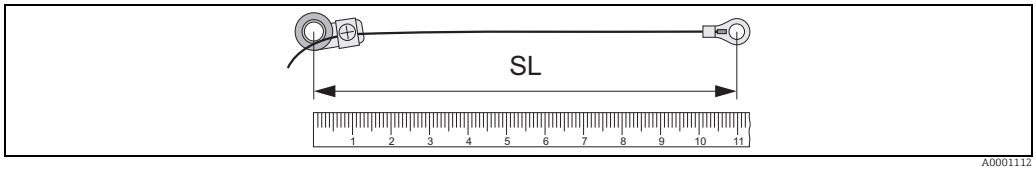

Fig. 22: Fixer (a) and cable lugs (b) at a distance that corresponds to the wire length (SL)

2. With the first measuring wire:
   - Fit the fixer over the mounting bolt of the strapping band that is already securely mounted.
   - Run the measuring wire **clockwise** around the pipe.
   - Fit the cable lug over the mounting bolt of the strapping band that can still be moved.
3. With the second measuring wire:
   - Fit the cable lug over the mounting bolt of the strapping band that is already securely mounted.
   - Run the measuring wire **counterclockwise** around the pipe.
   - Fit the fixer over the mounting bolt of the strapping band that can still be moved.
4. Take the still movable strapping band, incl. the mounting bolt, and move it until both measuring wires are evenly tensioned and tighten the strapping band so that it cannot slip.

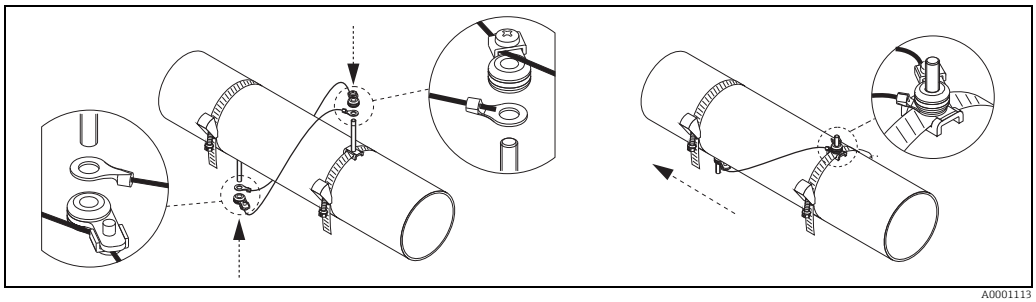

Fig. 23: Positioning the strapping bands (steps 2 to 4)

5. Loosen the screws of the fixers on the measuring wires and remove the measuring wires from the mounting bolt.
6. Fit the sensor holders over the individual mounting bolts and tighten securely with the retaining nut.

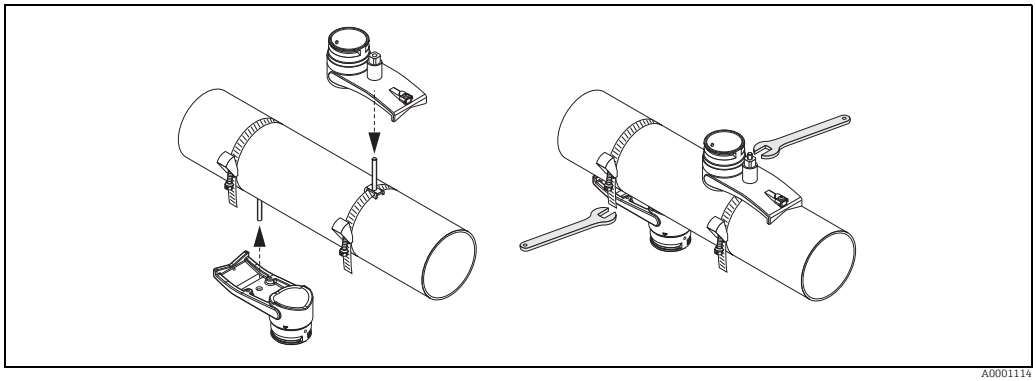

Fig. 24: Mounting the sensor holders

7. Coat the contact surfaces of the sensors with an even layer of coupling fluid approx. 1 mm (0.04") thick, going from the groove through the center to the opposite edge.

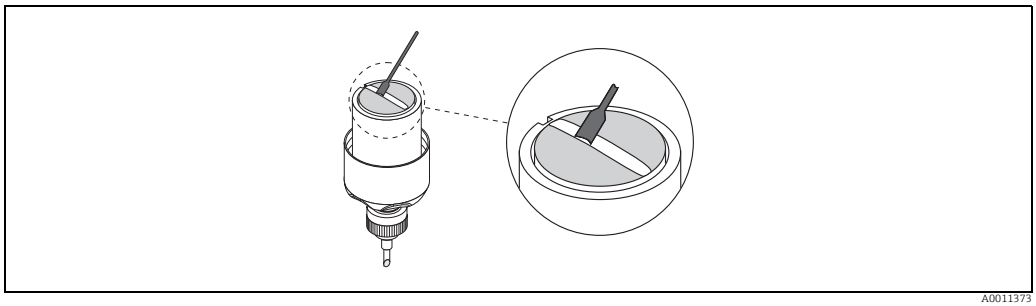

Fig. 25: Coating the contact surfaces of the sensor with coupling fluid

8. Insert the sensor into the sensor holder.
9. Fit the sensor cover on the sensor holder and turn until:
   – The sensor cover engages with a click.

The arrows (▲ / ▼ "close") are pointing towards one another.

10. Screw the connecting cable into the individual sensor.

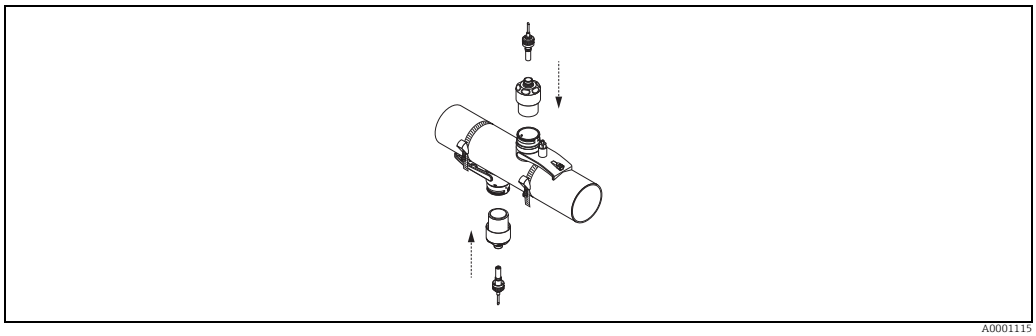

A0001115

Fig. 26: Mounting the sensor and connecting the connecting cable

This completes the mounting process. The sensors can now be connected to the transmitter via the connecting cables → 34.

3.8.2 Installation for measurement via two traverses

Prerequisites

- The installation distance (position sensor) is known → 13.
- The strapping bands are already mounted → 22.

Material

The following material is needed for mounting:
- Two strapping bands incl. mounting bolts and centering plates where necessary (already mounted → 22)
- A mounting rail to position the strapping bands
- Two mounting rail holders
- Two sensor holders
- Coupling fluid for an acoustic connection between the sensor and pipe
- Two sensors incl. connecting cables

Mounting rail and POSITION SENSOR installation distance

The mounting rail has two rows with bores. The bores in one of the rows are indicated by letters and the bores in the other row are indicated by numerical values. The value determined for the POSITION SENSOR installation distance is made up of a letter and a numerical value.
The bores that are identified by the specific letter and numerical value are used to position the strapping bands.

Procedure

1. Position the strapping bands with the aid of the mounting rail.
   - Slide the mounting rail with the bore identified by the letter from POSITION SENSOR over the mounting bolt of the strapping band that is permanently fixed in place.
   - Position the movable strapping band and slide the mounting rail with the bore identified by the numerical value from POSITION SENSOR over the mounting bolt.

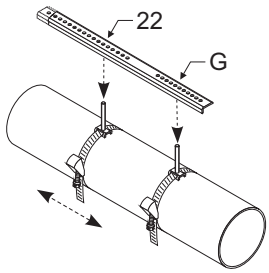

A0001116

Fig. 27: Determining the distance in accordance with the mounting rail (e.g. POSITION SENSOR G22)

2. Tighten the strapping band so that it cannot slip.
3. Remove the mounting rail from the mounting bolt.
4. Fit the sensor holders over the individual mounting bolts and tighten securely with the retaining nut.

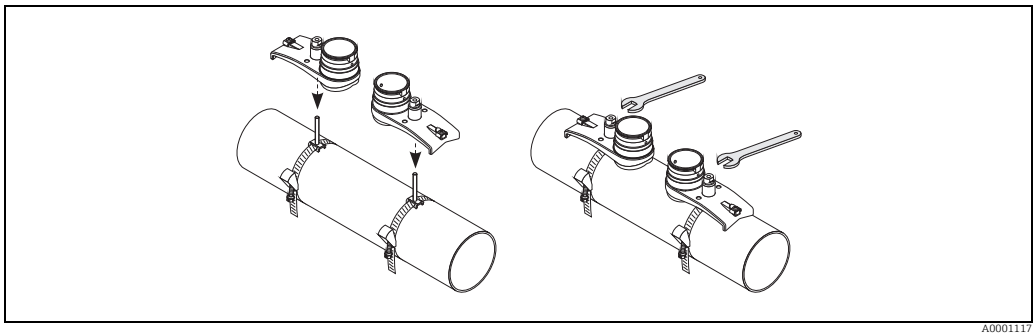

A0001117

Fig. 28: Mounting the sensor holders

5. Coat the contact surfaces of the sensors with an even layer of coupling fluid approx. 1 mm (0.04") thick, going from the groove through the center to the opposite edge.

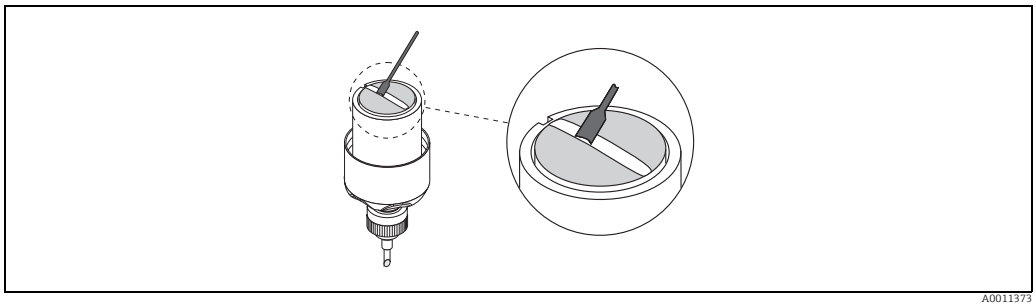

A0011373

Fig. 29: Coating the contact surfaces of the sensor with coupling fluid

6. Insert the sensor into the sensor holder.
7. Fit the sensor cover on the sensor holder and turn until:
   – The sensor cover engages with a click.
   – The arrows (▲ / ▼ "close") are pointing towards one another.
8. Screw the connecting cable into the individual sensor.

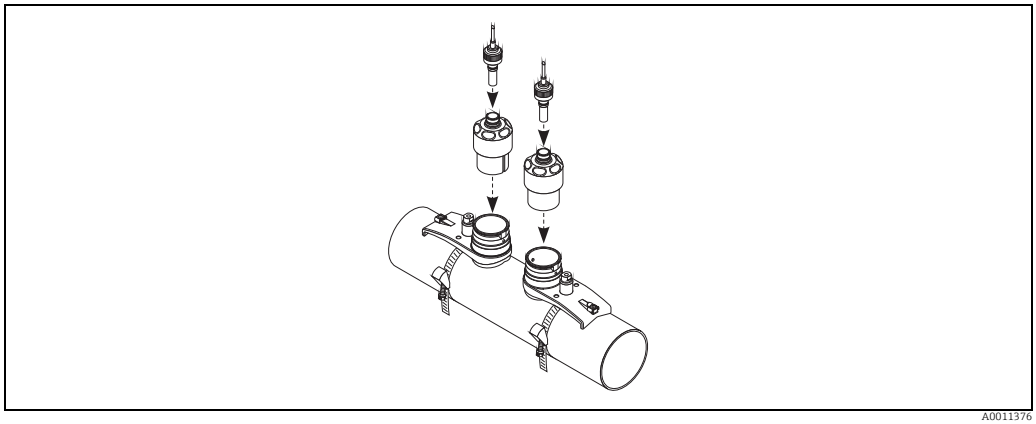

A0011376

Fig. 30: Mounting the sensor and connecting the connecting cable

This completes the mounting process. The sensors can now be connected to the transmitter via the connecting cables → 34.

3.9 Installing sensor DDU18

1. Premount the strapping band:
   – Nominal diameters DN ≤ 200 (8") → 📄 22
   – Nominal diameters DN > 200 (8") → 📄 23
   The two mounting bolts must be positioned opposite each other on either side of the pipe.
2. Fit the sensor holders over the individual mounting bolts and tighten securely with the retaining nut.
3. Coat the contact surfaces of the sensors with an even layer of coupling fluid approx. 1 mm (0.04") thick, going from the groove through the center to the opposite edge.
4. Insert the sensor into the sensor holder.
5. Fit the sensor cover on the sensor holder and turn until:
   – The sensor cover engages with a click.
   – The arrows (▲ / ▼ "close") are pointing towards one another.
6. Screw the connecting cable into the individual sensor.

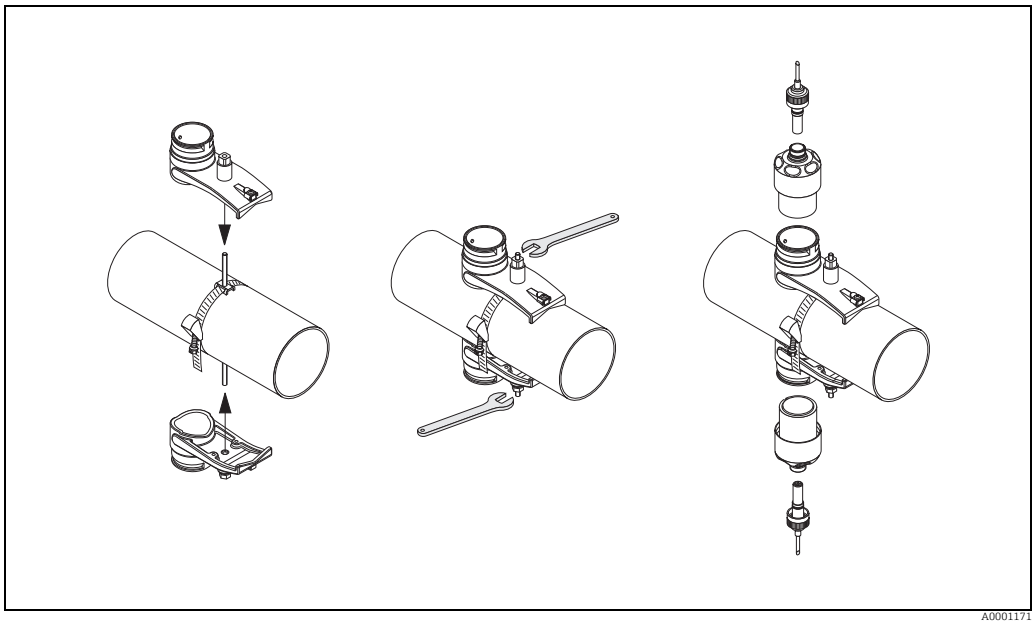

Fig. 31: Steps 1 to 5, installing the sound velocity measuring sensors

3.10 Installing sensor DDU20 (wall thickness measurement)

3.10.1 Method 1

Measuring the wall thickness on pipes DN 15 to 65 (½ to 2½") when using the sensor holder shown on → 18 or → 20.

1. Mount sensor holder per instructions → 18 or → 20.
2. Coat the contact surface (1) of the sensor with an even layer of coupling fluid approx. 1 mm (0.04") thick.

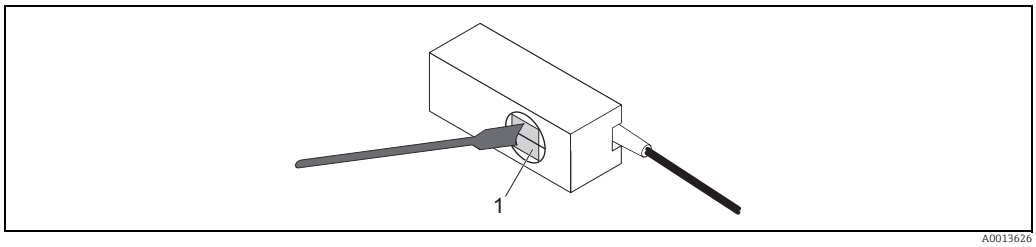

Abb. 32: Coating with coupling fluid

3. Mount sensor as illustrated in the graphic (steps 1 to 5).

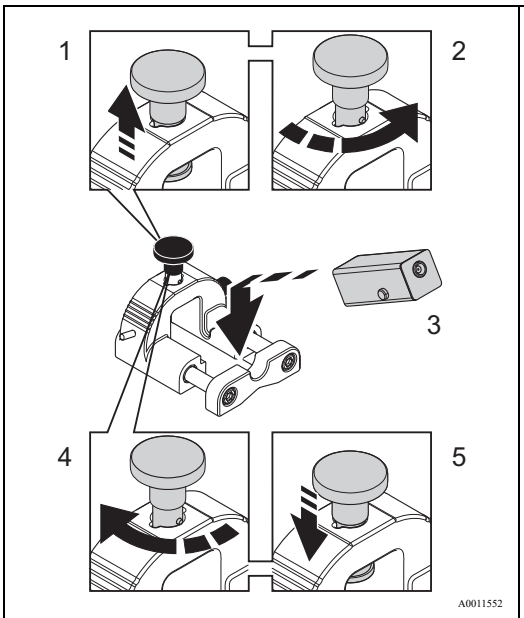

Abb. 33: Mounting the sensor, Sensor holder: Model 1

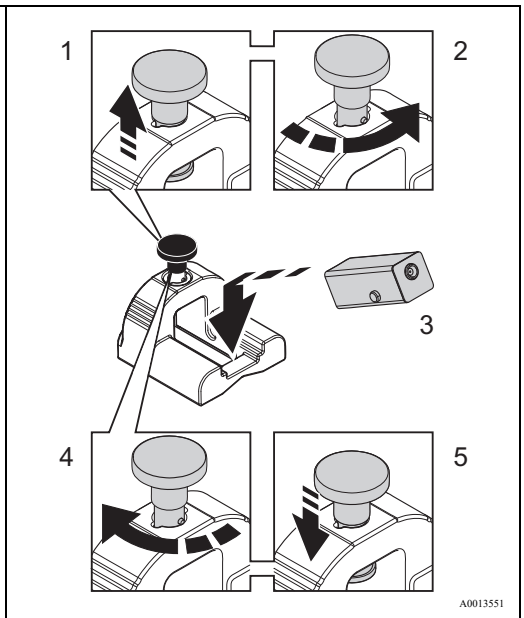

Abb. 34: Mounting the sensor, Sensor holder: Model 2

4. The sensor can now be connected to the 93T transmitter via the connecting cables.

Note!
The polarity of the connections to the 93T transmitter is not important for wall thickness measurement.
If flow sensors are to be installed after the wall thickness measurement is made, be sure to clean the pipe surface once again.

3.10.2 Method 2

Measuring the wall thickness on pipes DN 50 to 4000 (2 to 160").

1. Coat the contact surface of the sensor with an even layer of coupling fluid approx. 1 mm (0.04") thick.
2. Hold the sensor by hand on the pipe for measurement. Be sure that the horizontal line on the sensor contact surface is parallel to the axis of the pipe.

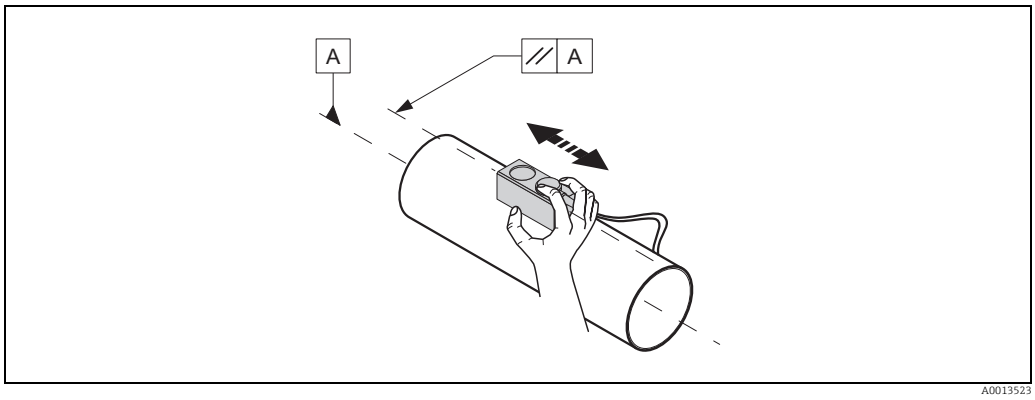

Fig. 35: Measuring the wall thickness

3. The sensor can now be connected to the 93T transmitter via the connecting cables.

Note!
The polarity of the connections to the 93T transmitter is not important for wall thickness measurement.
If flow sensors are to be installed after the wall thickness measurement is made, be sure to clean the pipe surface once again.

3.11 Post-installation check

Perform the following checks after installing the measuring device on the pipe:

Device condition and specifications	Notes
Is the cable or the device damaged (visual inspection)?	–
Does the device correspond to specifications at the measuring point, including process temperature, ambient temperature, measuring range, etc.?	→ 📄 64
Installation	Notes
Are the measuring point number and labeling correct (visual inspection)?	–
Process environment / process conditions	Notes
Have the inlet and outlet runs been observed?	→ 📄 11
Is the measuring device protected against moisture and direct sunlight?	–

4 Wiring

4.1 Charging the NiMH storage battery

Warning!
- The storage battery for the device (NiMH storage batteries) may only be charged with the charger supplied. Other equipment could cause the battery to overheat.
- Compare the information on the nameplate of the charger with the local supply voltage and frequency.

To charge the storage battery, connect the charger to the connection for 12 V DC power supply of the measuring device (→ 36, No. 7). It takes approx. 3.6 hours to charge the battery. Once charged, the unit operating life is approx. 8 hours.

4.2 Connecting the connecting cable

Warning!
- Only use the connecting cables supplied by Endress+Hauser.
- The measuring device only complies with the general safety requirements in accordance with EN 61010-1 and the EMC requirements of IEC/EN 61326 during storage battery operation. Disconnect the charger from the measuring device for measuring operation.

The connecting cables are available in different lengths → 52.

Connect the connecting cable to the connections CH-DN (downstream) and CH-UP (upstream) (→ 36, No. 4 and 5). The connectors on the connecting cable and measuring device have the same color code.

Note!
To ensure correct measuring results, route the cable well clear of electrical machines and switching elements.

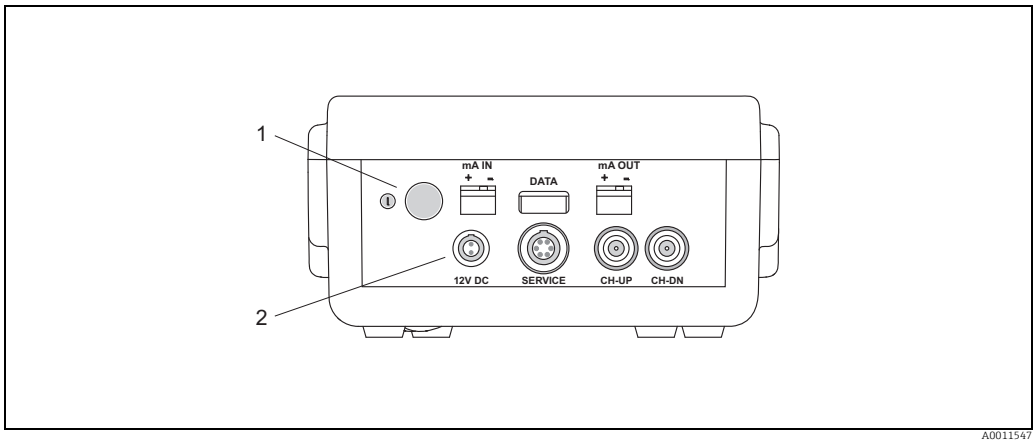

Fig. 36: Transmitter connections

1 *On/off switch (press switch ≥ 3 seconds)*
2 *Current input connection*
3 *USB plug connection*
4 *Connecting cable connection (CH-DN, downstream)*
5 *Connecting cable connection (CH-UP, upstream)*
6 *FXA193/FXA291 modem connection*
7 *Charger connection (different adapters are available for the connection*
8 *Current output connection*

4.3 Cable specification for connecting cable

Information on the cable specifications → 61.

4.4 Potential equalization

No special measures are necessary for potential equalization.

4.5 Degree of protection

Information on the degree of protection → 64.

4.6 Post-connection check

Perform the following checks after completing electrical installation of the measuring device:

Device condition and specifications	Notes
Are cables or the device damaged (visual inspection)?	–
Electrical connection	**Notes**
Does the supply voltage match the information on the nameplate on the charger?	→ 61
Is the connecting cable connected correctly?	→ 34

5 Operation

5.1 Quick operation guide

You have a number of options for configuring and commissioning the device:

1. Local display (option) → 36
   The local display enables you to read all of the important parameters directly at the measuring point, configure device-specific parameters in the field and commission the instrument.
2. Configuration program → 42
   You can commission the device with the FieldCare operating program.

5.2 Display and operating elements

The local display enables you to read all important parameters directly at the measuring point and configure the device using the "Quick Setup" or the function matrix.

The display area consists of four lines; this is where measured values are displayed, and/or status variables (direction of flow, bar graph, etc.). You can change the assignment of display lines to different variables to suit your needs and preferences.

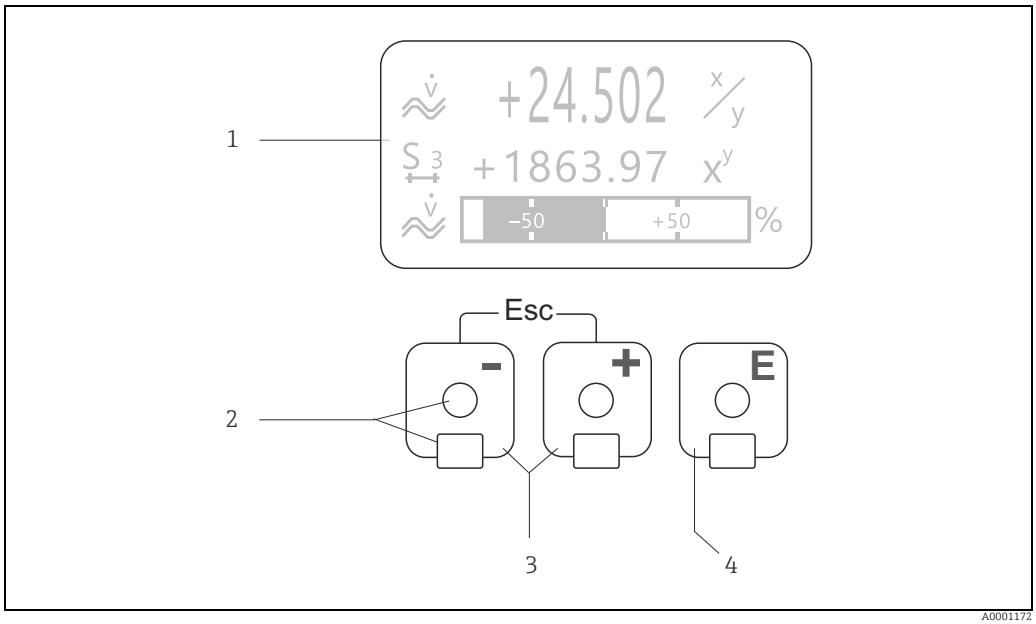

Fig. 37: Display and operating elements

Liquid crystal display (1)
The backlit, four-line liquid-crystal display shows measured values, dialog texts, error messages and notice messages. The display as it appears when normal measuring is in progress is known as the HOME position (operating mode).
Optical sensors for "Touch Control" (2)

2 Plus/minus keys (3)
- *HOME position → Direct access to totalizer values and actual values of inputs/outputs*
- *Enter numerical values, select parameters*
- *Select different blocks, groups and function groups within the function matrix*

Press the [+][−] keys simultaneously to trigger the following functions:
- *Exit the function matrix step by step → HOME position*
- *Press and hold down the [+][−] keys for longer than 3 seconds → Return directly to HOME position*
- *Cancel data entry*

3 Enter key (4)
- *HOME position → Entry into the function matrix*
- *Save the numerical values you input or settings you change*

Display (operating mode)

The display area consists of three lines in all; this is where measured values are displayed, and/or status variables (direction of flow, bar graph, etc.). You can change the assignment of display lines to different variables to suit your needs and preferences.

Multiplex mode:
A maximum of two different display variables can be assigned to each line. Variables multiplexed in this way alternate every 10 seconds on the display.

Error messages:
In-depth information on how system/process errors are displayed is provided on → 54 ff.

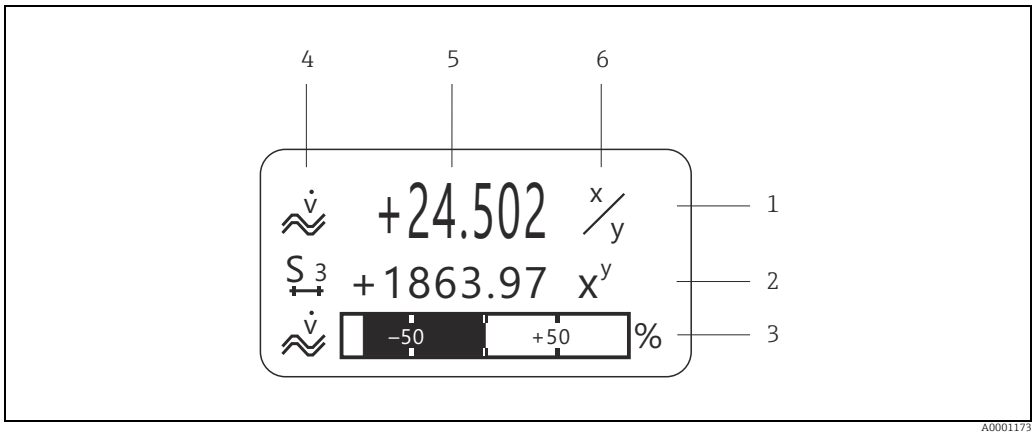

Fig. 38: Typical display for standard operating mode (HOME position)

1 *Main line: shows main measured values, e.g. volume flow in [l/s].*
2 *Additional line: shows additional measured variables and status variables, e.g. totalizer reading No. 3 in [m3].*
3 *Information line: shows additional information on the measured variables and status variables, e.g. bar graph display of the end value achieved by the volume flow.*
4 *"Info icons" field: icons representing additional information on the measured values are shown in this field. A full overview of all the symbols and their meaning is provided on → 38.*
5 *"Measured values" field: the current measured values appear in this field.*
6 *"Unit of measure" field: the units of measure and time defined for the current measured values appear in this field.*

Note!
From the HOME position, you can use the [+][−] keys to open an "Info Menu" containing the following information:
- Totalizers (including overflow)
- Actual values or states of the configured inputs/outputs
- Device TAG number (user-definable).

[+][−] key → Scan of individual values within the list
Esc key ([−][+]) → Return to HOME position

Icons

The icons which appear in the field on the left make it easier to read and recognize measured variables, device status, and error messages.

Icon	Meaning	Icon	Meaning
S	System error	P	Process errors
ϟ	Fault message (with effect on outputs)	!	Notice message (without effect on outputs)
Σ 1 to n	Totalizer 1 to n	A0013672	Signal strength
A0001181	Measuring mode: PULSATING FLOW	A0001182	Measuring mode: SYMMETRY (bidirectional)
A0001183	Measuring mode: STANDARD	A0001184	Totalizer count mode: BALANCE (forward and backward)
A0001185	Totalizer count mode: Forward	A0001186	Totalizer count mode: Backward
A0001187	Signal input (current input or status input)	A0001188	Volume flow
A000xxxx	Device operation active	A0013613	Battery operation
		A0013614	Connected to mains power

5.3 Brief guide to the function matrix

Note!
- See the general notes → 40.
- Function description→ 69

1. HOME position → E → Entry into the function matrix
2. Select a block (e.g. USER INTERFACE)
3. Select a group (e.g. CONTROL)
4. Select a function group (e.g. BASIC CONFIGURATION)
5. Select a function (e.g. LANGUAGE)

   Change parameter / enter numerical values:
   + − → Select or enter enable code, parameters, numerical values
   E → Save your entries
6. Exit the function matrix:
   – Press and hold down Esc key (Esc − +) for longer than 3 seconds → HOME position
   – Repeatedly press Esc key (Esc − +) → Return step-by-step to HOME position.

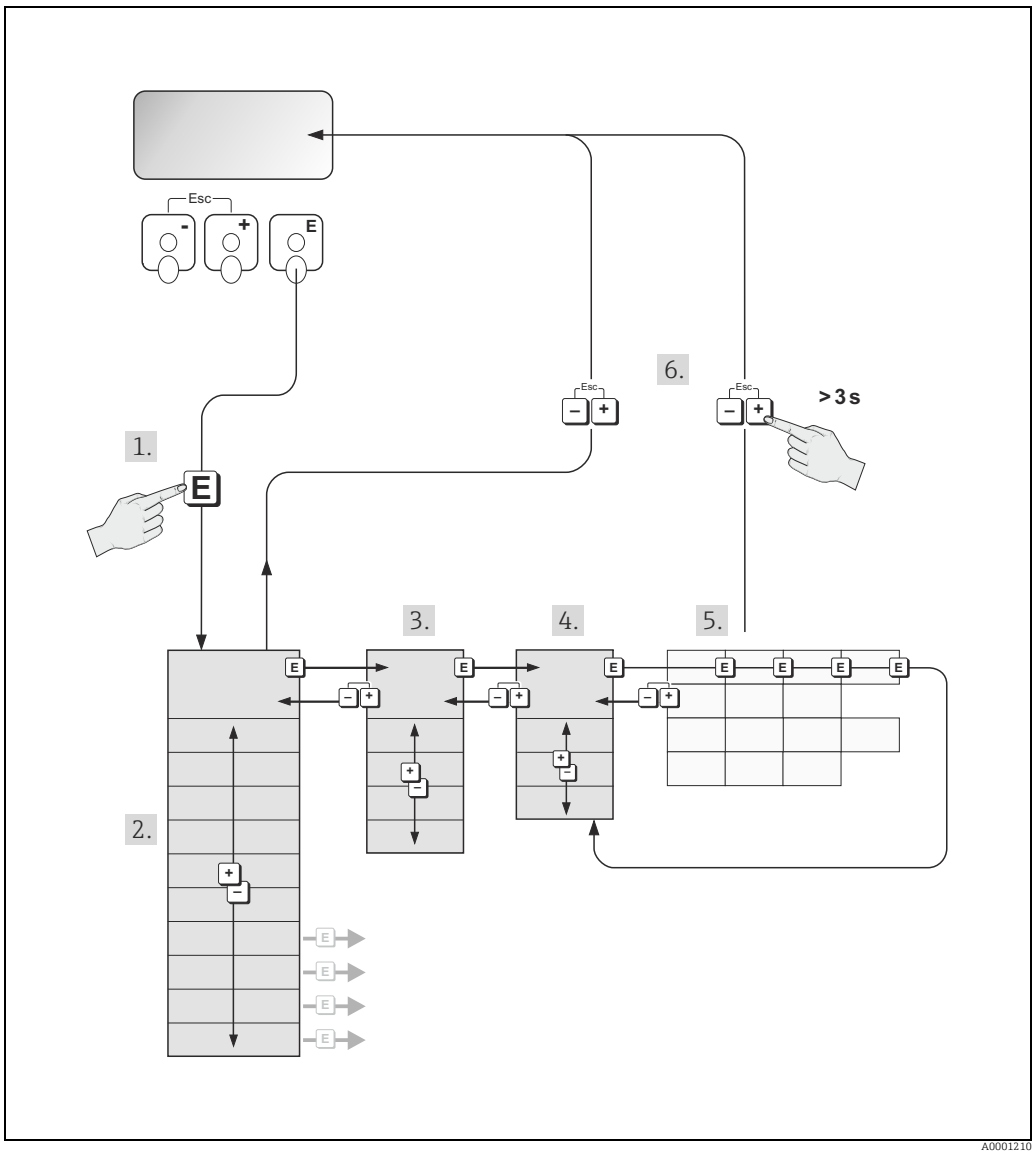

Fig. 39: Selecting functions and configuring parameters (function matrix)

5.3.1 General notes

The Quick Setup menu (→ 46) contains the default settings that are adequate for commissioning. Complex measuring operations on the other hand necessitate additional functions that you can configure as necessary and customize to suit your process parameters. The function matrix, therefore, comprises a multiplicity of additional functions which, for the sake of clarity, are arranged on a number of menu levels (blocks, groups, and function groups).

Comply with the following instructions when configuring functions:
- You select functions as described on → 39. Each cell in the function matrix is identified by a numerical or letter code on the display.
- You can switch off certain functions (OFF). If you do so, related functions in other function groups will no longer be displayed.
- Certain functions prompt you to confirm your data entries.
  Press [+][−] to select "SURE [YES]" and press [E] to confirm. This saves your setting or starts a function, as applicable.
- Return to the HOME position is automatic if no key is pressed for 5 minutes.

Note!
- The transmitter continues to measure while data entry is in progress, i.e. the current measured values are output via the signal outputs in the normal way.
- If the power supply fails all preset and parameterized values remain safely stored in the EEPROM.

Caution!
All functions are described in detail, as is the function matrix itself on → 69.

5.3.2 Enabling the programming mode

The function matrix can be disabled. Disabling the function matrix rules out the possibility of inadvertent changes to device functions, numerical values or factory settings. A numerical code (factory setting = 80) has to be entered before settings can be changed.
If you use a code number of your choice, you exclude the possibility of unauthorized persons accessing data.

Comply with the following instructions when entering codes:
- If programming is disabled and the [+][−] operating elements are pressed in any function, a prompt for the code automatically appears on the display.
- If "0" is entered as the private code, programming is always enabled.
- The Endress+Hauser service organization can be of assistance if you mislay your personal code.

Caution!
Changing certain parameters such as all sensor characteristics, for example, influences numerous functions of the entire measuring system, particularly measuring accuracy.
There is no need to change these parameters under normal circumstances and consequently, they are protected by a special code known only to the Endress+Hauser service organization.
Please contact Endress+Hauser if you have any questions.

5.3.3 Disabling the programming mode

Programming mode is disabled if you do not press an operating element within 60 seconds following automatic return to the HOME position.
You can also disable programming in the "ACCESS CODE" function by entering any number other than the customer's code.

5.4 Error messages

5.4.1 Type of error

Errors that occur during commissioning or measuring are displayed immediately. If two or more system or process errors occur, the error with the highest priority is the only one shown on the display.

The measuring system distinguishes between two types of error:
- *System error:* this group includes all device errors, for example communication errors, hardware errors, etc. (→ 54).
- *Process error:* this group includes all application errors, e.g. measuring range exceeded (→ 57).

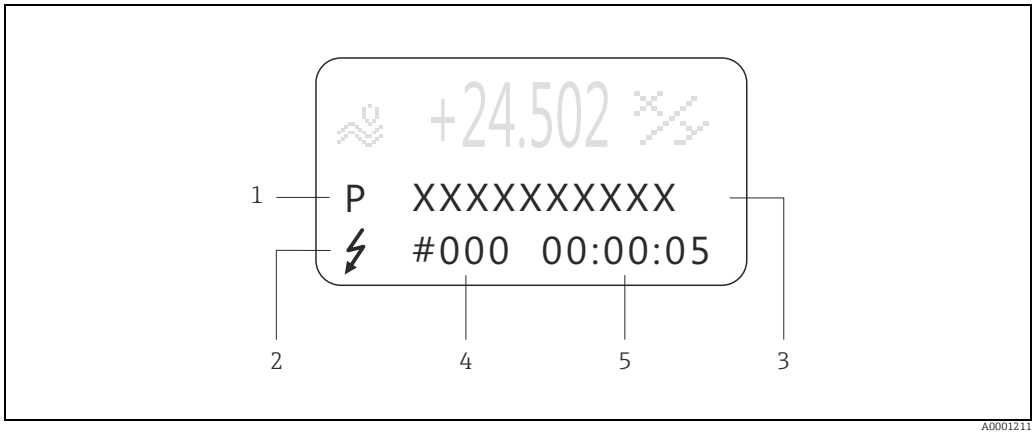

Fig. 40: Error messages on the display (example)

1 *Error type: P = process error, S = system error*
2 *Error message type: ϟ = fault message, ! = notice message, (definition: → 54)*
3 *Error designation: e.g. S. V. RANGE CH1. = sound velocity of channel 1 is outside the measuring range*
4 *Error number: e.g. #492*
5 *Duration of most recent error occurrence (in hours, minutes and seconds)*

5.4.2 Error message types

Users have the option of weighting system and process errors differently, by defining them as either **Fault messages** or **Notice messages**. This is specified by means of the functions in the function matrix. → 69. Serious system errors, e.g. module defects, are always identified and classed as "fault messages" by the measuring device.

Notice message (!)
- Displayed as → Exclamation mark (!), error group (S: system error, P: process error).
- The error in question has no effect on the outputs of the measuring device.

Fault message (ϟ)
- Displayed as → Lightning flash (ϟ), error designation (S: system error, P: process error)
- The error in question has a direct effect on the outputs.
  The response of the outputs (failsafe mode) can be defined by means of functions in the function matrix (→ 59).

Note!
- Error conditions can be output via the relay outputs.
- If an error message occurs, an upper or lower signal level for the breakdown information according to NAMUR NE 43 can be output via the current output.

5.4.3 Confirming error messages

For plant and process safety reasons, the measuring device can be configured in such a way that fault messages displayed (ϟ) not only have to be eliminated but also have to be confirmed by pressing E. Only then will error messages disappear from the display!
This function is enabled or disabled via the ACKNOWL. FAULTS function.

Note!
- Fault messages (ϟ) can also be reset and confirmed via the status input.
- Notice messages (!) do not have to be confirmed. However, they remain on the display until the cause for the error has been eliminated.

5.5 Communication

5.5.1 FieldCare

FieldCare is Endress+Hauser's FDT-based plant asset management tool and allows the configuration and diagnosis of intelligent field devices. By using status information, you also have a simple but effective tool for monitoring devices. The Proline flowmeters are accessed via a service interface or via the service interface FXA193.

6 Commissioning

6.1 Function check

Make sure that all final checks have been completed before you commission your measuring point:
- Checklist for "Post-installation check" → 33
- Checklist for "Post-connection check" → 35

6.2 Switching on the measuring device

Warning!
The measuring device only complies with the general safety requirements in accordance with EN 61010-1 and the EMC requirements of IEC/EN 61326 during storage battery operation. Disconnect the charger from the measuring device for measuring operation.

The measuring device is switched on by pressing the ON/OFF switch ≥ 3 seconds (→ 34, → 36, No. 1).

The measuring system performs a number of internal test functions after power-up. During this process, the following sequence of messages appears on the local display:

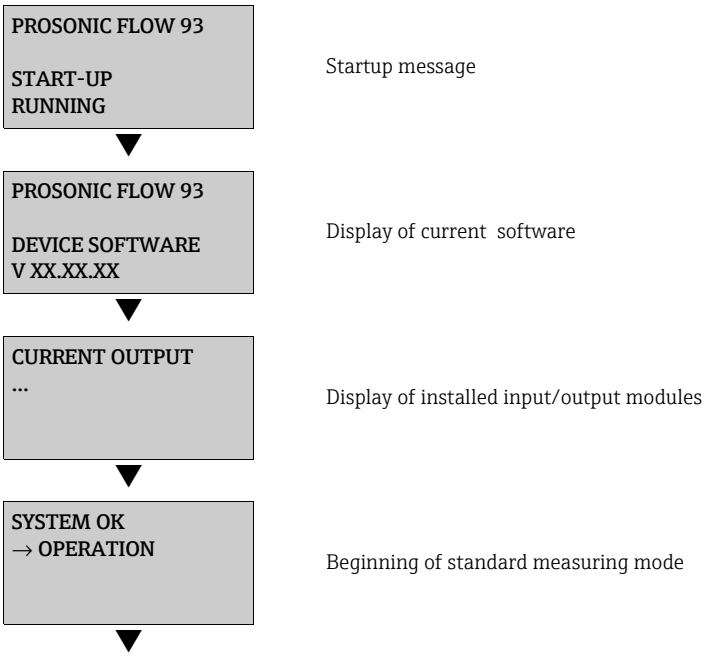

Normal measuring mode commences as soon as startup completes.
Various measured value and/or status variables appear on the display (HOME position).

Note!
If startup fails, an appropriate error message is displayed, depending on the cause.

6.2.1 Resetting the measuring device

The measuring device is reset by pressing the ON/OFF switch ≥ 30 seconds (→ 34, → 36, No. 1). Only the internal clock of the measuring device is reset during the reset. All the other settings remain unchanged.

6.3 Commissioning via onsite display

6.3.1 Quick Setup "Sensor Installation"

The installation distances needed to install the sensors can be determined using the Quick Setup menu → 13.

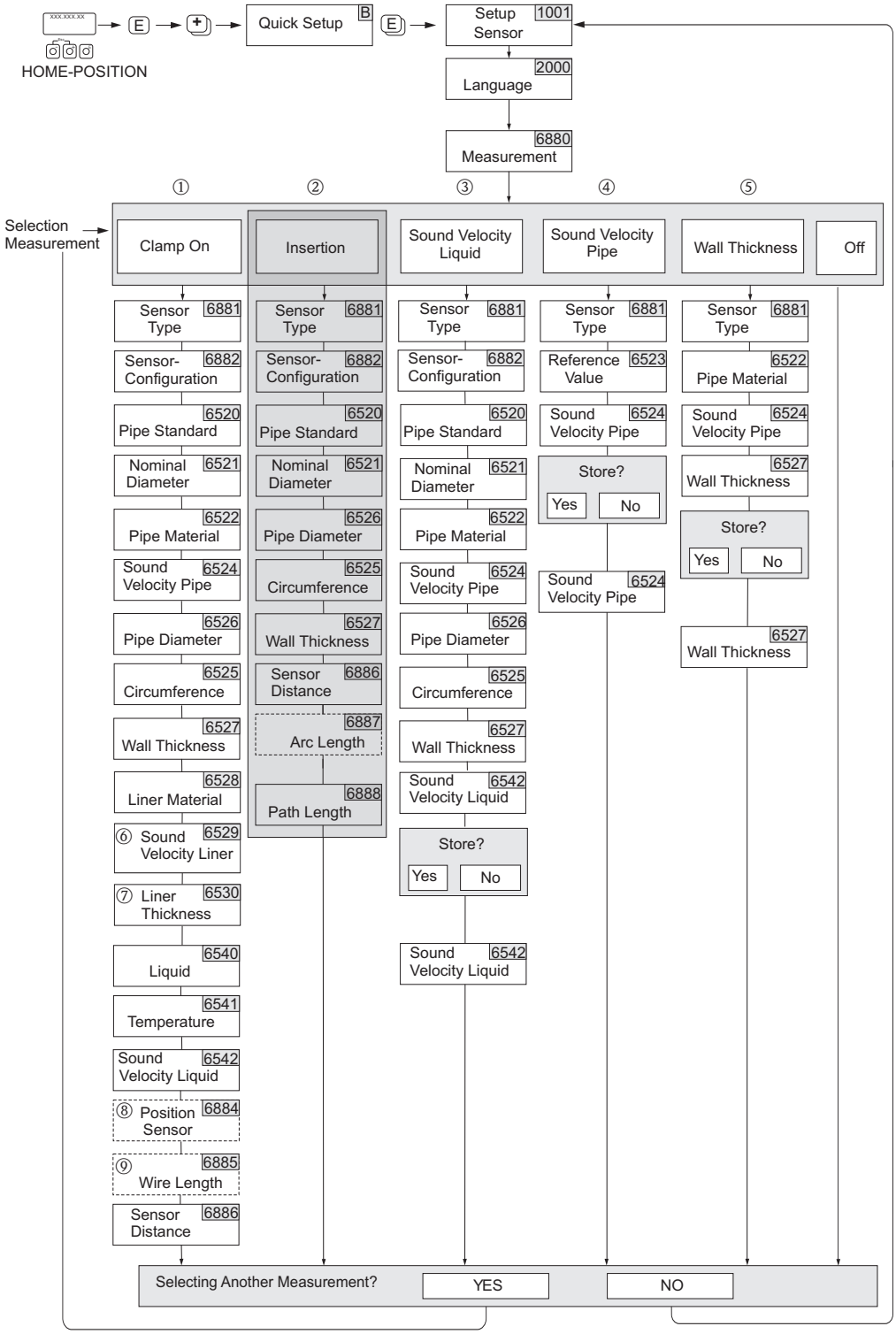

Fig. 41: Quick Setup menu "Sensor" (only via onsite display)

Note!
- The installation distances can also be determined via the Applicator online tool → 16.
- The display returns to the function SETUP SENSOR (1001) if you press the ESC key combination during parameter interrogation.

① The necessary installation distances are determined with the CLAMP ON option.

② The INSERTION option is not supported by the Prosonic Flow 93T sensor.

③ The SOUND VELOCITY LIQUID option is only needed for the DDU18 sensor.
"Save?" prompt:
- YES = The value measured during Quick Setup is accepted in the appropriate function.
- NO = The measurement is discarded and the original value remains.

④ The SOUND VELOCITY PIPE option is only needed for the DDU18 sensor.
"Save?" prompt:
- YES = The value measured during Quick Setup is accepted in the appropriate function.
- NO = The measurement is discarded and the original value remains.

⑤ The WALL THICKNESS option is only needed for the DDU20 sensor.
"Save?" prompt:
- YES = The value measured during Quick Setup is accepted in the appropriate function.
- NO = The measurement is discarded and the original value remains.

⑥ The SOUND VELOCITY LINER (6529) only appears if:
- The LINER MATERIAL is selected to something other than NONE. (6880)

⑦ The LINER THICKNESS (6530) only appears if:
- The LINER MATERIAL is selected to something other than NONE. (6880)

⑧ The POSITION SENSOR function (6884) only appears if:
- The CLAMP ON option is selected in the MEASUREMENT function (6880)
  and
- Two traverses are selected in the SENSOR CONFIGURATION function (6882)

⑨ The WIRE LENGTH function (6885) only appears if:
- The CLAMP ON option is selected in the MEASUREMENT function (6880)
  and
- One traverse is selected in the SENSOR CONFIGURATION function (6882)

6.3.2 Quick Setup "Commissioning"

All the device parameters important for standard measuring mode, as well as additional functions, can be configured easily and quickly using the Quick Setup menu.

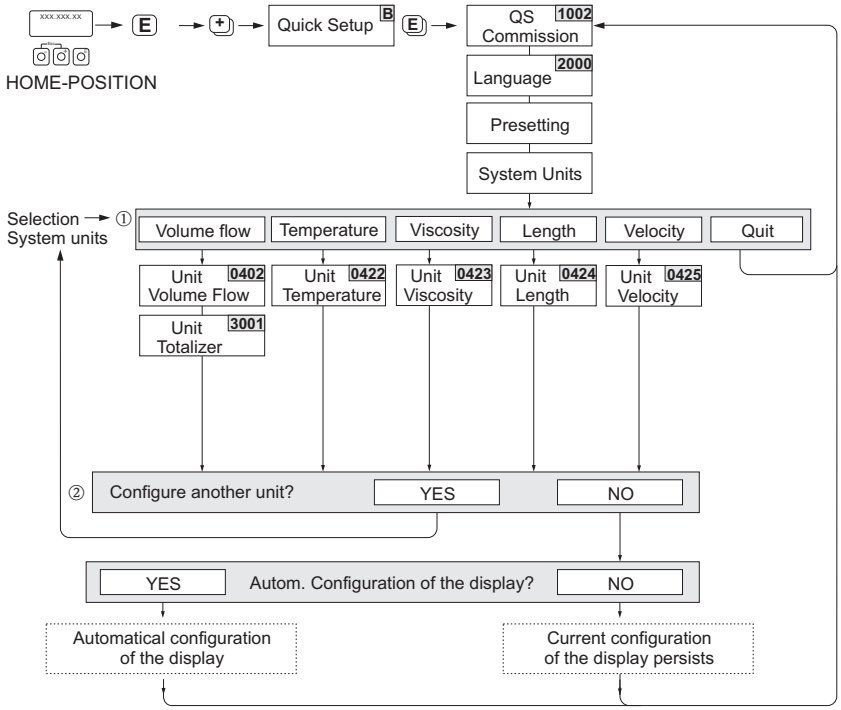

Fig. 42: Quick Setup "Commissioning"

Note!

- The display returns to the function SETUP COMMISSIONING (1002) if you press the ESC key combination during parameter interrogation.
- If you answer YES to the question regarding the "Automatic configuration of the display", the display lines are assigned as follows:
  - Main line = volume flow
  - Additional line = totalizer 1
  - Information line = operating/system condition

① Only units not yet configured in the current Quick Setup are offered for selection in each cycle. The volume unit is derived from the volume flow unit.

② The "YES" option remains visible until all the units have been configured.
"NO" is the only option displayed when no further units are available.

③ Only outputs not yet configured in the current Quick Setup are offered for selection in each cycle.

6.4 Application-specific commissioning

6.4.1 Zero point adjustment

Zero point adjustment is generally not necessary!

Experience shows that the zero point adjustment is advisable only in special cases:
- To achieve highest measuring accuracy with very low flow rates.
- Under extreme process or operating conditions (e.g. very high process temperatures or very high viscosity fluids).

Preconditions for a zero point adjustment

Note the following before you perform a zero point adjustment:
- A zero point adjustment can be performed only with fluids that have no gas or solid contents.
- Zero point adjustment is performed with the measuring tube completely filled and at zero flow (v=0 m/s). This can be achieved, for example, with shutoff valves upstream and/or downstream of the measuring range or by using existing valves and gates (→ 47).
  - Standard operation → Valves 1 and 2 open
  - Zero point adjustment with pump pressure → Valve 1 open / valve 2 closed
  - Zero point adjustment without pump pressure → Valve 1 closed / valve 2 open

Caution!
- If the fluid is very difficult to measure (e.g. containing entrained solids or gas) it may prove impossible to obtain a stable zero point despite repeated zero point adjustments. In instances of this nature, please contact your Endress+Hauser service center.
- You can view the currently valid zero point value using the ZERO POINT function.

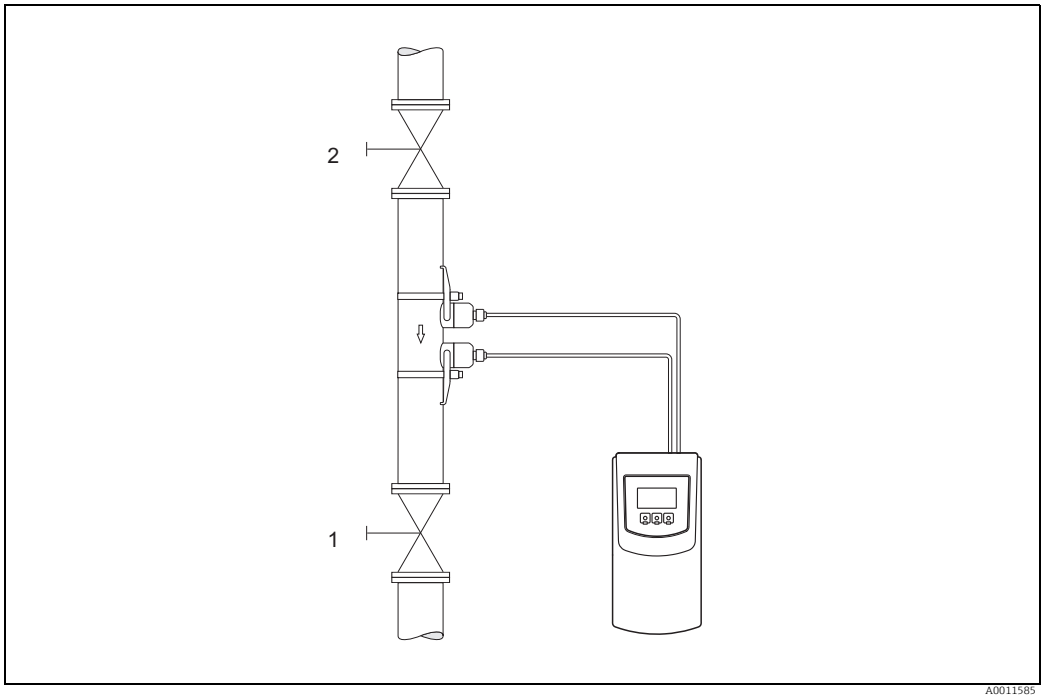

Fig. 43: Zero point adjustment and shutoff valves

Performing a zero point adjustment

1. Operate the system until normal operating conditions resume.
2. Stop the flow (v = 0 m/s).
3. Check the shutoff valves for leaks.
4. Check that operating pressure is correct.
5. Using the local display, select the "ZEROPOINT ADJUST" function in the function matrix:

   HOME → E → R → BASIC FUNCTIONS
   BASIC FUNCTIONS → E → R → PROCESS PARAMETER CH1/CH2
   PROCESS PARAMETER → E → R → ADJUSTMENT
   ADJUSTMENT → E → ZEROPOINT ADJUST
6. When you press + − you are automatically prompted to enter the access code if the function matrix is still disabled. Enter the code.
7. With + −, select the START setting and confirm with E .
   Acknowledge the security prompt with YES and press E to confirm. Zero point adjustment is now started:
   – The message "ZEROPOINT ADJUST RUNNING" appears on the display for 30 to 60 seconds while adjustment is in progress.
   – If the flow in the pipe exceeds 0.1 m/s, the following error message appears on the display: ZERO ADJUST NOT POSSIBLE.
   – When the zero point adjustment completes, the "ZERO ADJUST" function reappears on the display.
8. Back to the HOME position
   – Press and hold down Esc key (Esc − +) for longer than three seconds.
   – Repeatedly press and release the Esc key (Esc − +).

6.5 Using the data logger

Prosonic Flow has the capability to log volume flow, flow velocity, sound velocity, signal strength, signal to noise ratio, the content of the three internal totalizers, external volume flow, and the actual current of the current input. The data set is fixed and not configurable. The sampling time is configurable. The logged data are stored on an external memory unit (1 GB USB memory stick) in a CSV text format.
Logging is started from the LOGGING function found in the OUTPUTS → E →DATA LOGGER menu when a memory stick is available. Logging is stopped in the same function or by removing the memory stick from the unit. The latter is not a recommended method due to the remote possibility corrupting the data.

6.6 Data exchange with Prosonic Flow 93T

Prosonic Flow 93T uses a text file format commonly referred to as a CSV format (**C**omma **S**eparated **V**alues) for its data exchange.
A logged data record is placed on one line. A record contains a number of fields (time stamp, measurement parameters, flow data, etc.). A delimiter – a blank space, semi-colon, comma or other character that indicates the beginning or end of a field – is used to organize the fields into columns. A separator – usually a point (.) or a comma (,) – is used to identify the location of the decimal.

The Prosonic Flow 93T can be configured to record logs using different characters assigned as decimal separator and field delimiter. → 106 The settings required are dependant on the local settings used by the PCs and Laptops in a particular region.

6.7 Site Manager

The Prosonic Flow 93T is equipped with the capability to store and recall user information for a given set-up. This set of programmed (such as Pipe Data, Sensor Parameters, Liquid Data, etc.) defines a specific a "site". Using the Site Manager feature the user can store site data in files for current and future access.

One site is in always stored in the instrument's internal memory. The storage of additional sites is physically located on the USB stick. Thus, the Site Manager can only be accessed and used when the USB stick is installed in the Prosonic Flow 93T transmitter. A maximum of 20 sites can be created and stored.

The Site Manager is accessed via the Output function block. OUTPUTS → E →DATA LOGGER→ E → SITE MANAGER.

The Site Manager allows the user to perform the following specific functions:

- SAVE a set of programmed information as a site to the USB stick → 104
- Assign a user defined NAME to the site → 105
- LOAD a site stored on the USB stick to the 93T transmitter → 104
- DELETE sites stored on the USB stick → 105

The "site" data currently being used by the instrument for measurement (the data in the instrument's internal memory) is referred to as the ACTUAL SITE. When the Site Manager is first accessed the instrument compares the site data currently being used in its internal memory with the all the site data files located on the external USB stick. During this process the meter will display the message CHECKING. If there is a match between these two data sets the unit will display the name of the site in the ACTUAL SITE position. If there is no match the instrument will display "_ _ _ _ _ _". The user then has ability to save this data as a NEW SITE and assign a name or choose a previously stored site and LOAD that site to the instrument.
A site is defined only by the most important information specific to a given metering application, the table below indicates which specific information is stored when a site is created or loaded into the instrument memory.

Group SYSTEM UNITS	UNIT VOLUME FLOW (0402)
	UNIT TEMPERATURE (0422)
	UNIT VISCOSITY (0423)
	UNIT LENGTH (0424)
	UNIT VELOCITY (0425)
Group SENSOR PARAMETER	MEASUREMENT (6880)
	SENSOR TYPE (6681)
	SENSOR CONFIGURATION (6882)

Group PIPE DATA	PIPE STANDARD (6520)
	NOMINAL DIAMETER (6521)
	PIPE DIAMETER (6526)
	PIPE MATERIAL (6522)
	SOUND VELOCITY PIPE (6524)
	WALL THICKNESS (6527)
	LINER MATERIAL (6528)
	SOUND VELOCITY LINER (6529)
	LINER THICKNESS (6528)
Group LIQUID DATA	LIQUID (6540)
	TEMPERATURE (6541)
	SOUND VELOCTITY LIQUID (6542)
	VISCOSITY (6543)
Group TOTALIZER (1..3)	ASSIGN (3000)
	UNIT TOTALIZER (3001)
	TOTALIZER MODE (3002)

All other programming data in the instrument's memory remains unchanged when sites are saved or loaded. This means that other parameters not included in the list above need to be managed manually via the keypad and program menu.

Note!
The Correction Factor (BASIC FUNCTIONS → E SENSOR DATA → E CALIBRATION DATA) is set to 1.00 for all sites saved to the USB stick. If correction factors are applied in the field these values need to be manually reset via the keypad and program menu. A Correction Factor is valid until the site is saved or a new site is loaded.

Note!
The Zero Point (BASIC FUNCTIONS → E SENSOR DATA → E CALIBRATION DATA) is set to 0.000 nanoseconds for all sites saved to the USB stick. If a zero point adjustment is made in the field these saves need to be manually reset via the keypad and program menu. A zero point adjustment is valid until teh site is saved or a new site is loaded.

Note!
The Arbitrary Volume Function is not supported by the Site Manager. No custom volume units will be stored in the saved site information.

Note!
All Site Manager functions are disabled if a data log is running.

Note!
It is recommended to delete sites from the USB stick via the Prosonic Flow 93T Site Manager and not via PC or laptops. The name of the stored site is only visible via the Site Manager.

7 Maintenance

7.1 General

The flow measuring system Prosonic Flow 93T requires no special maintenance.

Exterior cleaning

When cleaning the exterior of measuring devices, always use cleaning agents that do not attack the surface of the housing and the seals.

Coupling fluid

A coupling fluid is required to ensure the acoustic link between the sensor and the piping. This is applied to the sensor surface during commissioning. Periodic replacement of the coupling fluid is usually not required.

7.2 Charging the device

Prosonic Flow 93T is charged applying the supplied power supply type FW7362M12 or the optional DK9ZT-2 automobile cigarette lighter charging cable. Prosonic Flow 93T is supplied pre-charged, but it is recommended to charge the device before first use.
The Prosonic Flow 93T can be charged in the temperature range +5 to +45 °C (+41 to +113 °F). The charging process is monitored and protected. It will idle when the temperature at the battery pack exceeds +35 °C (+95 °F) and resume when the temperature drops below that temperature. Below +5 °C (+41 °F) and above +45 °C (+113 °F) charging is terminated. The charging time is 4 hours when starting empty. Good maintenance praxis is to charge the battery pack fully before use and optimally to discharge it fully before recharging to ensure optimal battery life.
The device will automatically stop the charging when the battery is fully charged. The charge bar will indicate 100%.

Caution!
Unit should not be left without a recharge cycle for more than approximately 4 months. After 4 months without a charge the battery may need replacement.

8 Accessories

Various accessories, which can be ordered separately from Endress+Hauser, are available for the transmitter and the sensor. The Endress+Hauser service organization can provide detailed information on the order codes on request.

Device-specific accessories

Accessory	Description	Order code
Sensor P (DN 15 to 65 / ½ to 2½") Clamp-on version	DN 15 to 65 (½ to 2½") ▪ −40 to +100 °C (−40 to +212 °F) ▪ −40 to +150 °C (−40 to +302 °F)	 DK9PT - 1A DK9PT - 2A
Sensor P (DN 50 to 4000 / 2 to 160") Clamp-on version	DN 50 to 300 (2 to 12") ▪ −40 to +80 °C (−40 to +176 °F) ▪ −40 to +170 °C (−40 to +338 °F) DN 100 to 4000 (4 to 160") ▪ −40 to +80 °C (−40 to +176 °F) ▪ 0 to +170 °C (+32 to +338 °F)	 DK9PT - BA DK9PT - FA DK9PT - AA DK9PT - EA
Sensor DDU18	Sensor for sound velocity measurement −40 to +80 °C (−40 to +176 °F) 0 to +170 °C (+32 to +338 °F)	 50091703 50091704
Sensor DDU20	Sensor for wall thickness measurement. ▪ −20 to +60 °C (−4 to +140 °F)	 71112217

Measuring principle-specific accessories

Accessory	Description	Order code
Sensor holder set	▪ Prosonic Flow P (DN 15 to 65 / ½ to 2½"): Sensor holder, clamp-on version ▪ Prosonic Flow P (DN 50 to 4000 / 2 to 160") − Sensor holder, fixed retaining nut, clamp-on version − Sensor holder, removable retaining nut, clamp-on version	 DK9SH - 2 DK9SH - A DK9SH - B
Clamp-on installation set Clamp On	▪ DN < 1500 (60") (textile strapping) ▪ DN ≥ 1500 (60") (textile strapping)	DK9ZT - D DK9ZT - E
Connecting cable	5 m (16.4 ft) sensor cable, PTFE, −40 to +170 °C (−40 to +338 °F) 10 m (32.8 ft) sensor cable, PTFE, −40 to +170 °C (−40 to +338 °F)	DK9SS - CEE DK9SS - CEF
Acoustic coupling fluid	▪ Coupling fluid: −40 to +170 °C (−40 to +338 °F), standard, high temperature ▪ Adhesive coupling fluid: −40 to +80 °C (−40 to +176 °F) ▪ Water-soluble coupling fluid: −20 to +80 °C (−4 to +176 °F) ▪ Coupling fluid DDU20: −20 to +60 °C (−4 to +140 °F) ▪ Coupling fluid: −40 to +100 °C (−40 to +212 °F), standard, type MBG2000	DK9CM - 2 DK9CM - 3 DK9CM - 4 DK9CM - 6 DK9CM - 7

Service-specific accessories

Accessory	Description	Order code
Applicator	Software for selecting and planning flowmeters. The Applicator can be downloaded from the Internet or ordered on CD-ROM for installation on a local PC. Contact your Endress+Hauser representative for more information.	DXA80 - *
Fieldcheck	Tester/simulator for testing flowmeters in the field. When used in conjunction with the "FieldCare" software package, test results can be imported into a database, printed out and used for official certification. Contact your Endress+Hauser representative for more information.	50098801
FieldCare	FieldCare is Endress+Hauser's FDT-based plant asset management tool. It can configure all intelligent field units in your system and helps you manage them. By using the status information, it is also a simple but effective way of checking their status and condition.	See the product page on the Endress+Hauser website: www.endress.com
FXA193	Service interface from the measuring device to the PC for operation via FieldCare.	FXA193 – *
Communication cable	Communication cable for connecting the Prosonic Flow 93T transmitter to the FXA193 service interface.	DK9ZT – A
FXA291	Service interface from the measuring device to the PC for operation via FieldCare.	FXA291 – *
Communication cable	Communication cable for connecting the Prosonic Flow 93T transmitter to the FXA291 service interface.	DK9ZT – 8

9 Troubleshooting

9.1 Troubleshooting instructions

Always start troubleshooting with the following checklist if faults occur after commissioning or during operation. The routine takes you directly to the cause of the problem and the appropriate remedial measures.

Check the display	
Nothing shown on the display.	Check the device storage battery and charge it if necessary.
Display texts are in a foreign language.	1. Switch off the measuring device. 2. Press and hold down both the + − keys and switch on the measuring device. The display text will appear in English (default) and is displayed at maximum contrast.

▼

Error messages on display	
Errors that occur during commissioning or measuring are displayed immediately. Error messages consist of a variety of icons. The meanings of these icons are as follows: – Type of error: **S** = System error, **P** = Process error – Error message type: ϟ = Fault message, **!** = Notice message – S.V. RANGE CH1 = error designation (e.g. sound velocity for channel 1 is outside the measuring range) – **03:00:05** = duration of error occurrence (in hours, minutes and seconds) – **#492** = error number Caution! ▪ See the information on → 📄 41! ▪ The measuring system interprets simulations and positive zero return as system errors, but displays them as notice messages only.	
Error number: No. 001 – 399 No. 501 – 799	System error (device error) has occurred → 📄 54
Error number: No. 401 – 499	Process error (application error) has occurred → 📄 57

▼

Other error (without error message)	
Some other error has occurred.	Diagnosis and rectification → 📄 58

9.2 System error messages

Serious system errors are **always** recognized by the instrument as "Fault message" and are shown as a lightning flash (ϟ) on the display! Fault messages immediately affect the inputs and outputs.

Caution!
In the event of a serious fault, a flowmeter might have to be returned to the manufacturer for repair. Important procedures must be carried out before you return a flowmeter to Endress+Hauser → 📄 5. Always enclose a duly completed "Declaration of Contamination" form. A copy of the form can be found at the end of these Operating Instructions!

Note!
See the information or troubleshooting guide on → 📄 54.

No.	Error message/type	Cause	Remedy (spare parts → 🗎 52 ff.)
S = System error ϟ = Fault message (with an effect on the outputs) ! = Notice message (without any effect on the outputs)			
No. # 0xx → Hardware error			
001	S: CRITICAL FAILURE $: # 001	Critical device error.	Replace the amplifier board.
011	S: AMP HW EEPROM $: # 011	Amplifier: Faulty EEPROM	Replace the amplifier board.
012	S: AMP SW EEPROM $: # 012	Amplifier: Error when accessing data of the EEPROM.	The EEPROM data blocks in which an error occurred are displayed in the TROUBLESHOOTING function. The errors in question have to be confirmed with the Enter key; faulty parameters are then replaced by predefined standard values. Note! The device has to be restarted if an error occurs in the totalizer block (see also error # 111 / CHECKSUM TOTAL.).
082	S: SENS. DOWN CH1 $: # 082	Connection between sensor channel 1 and transmitter interrupted.	▪ Check the cable connection between the sensor and transmitter. ▪ Check whether the sensor connector is inserted until the stop. ▪ The sensor might be defective. ▪ Incorrect sensor connected. ▪ The wrong sensor was selected in the SENSOR TYPE function (No. 6881).
085	S: SENS. UP CH1 $: # 085		
No. # 2xx → Error with DAT / no data reception			
261	S: COMMUNIC. I/O $: # 261	No data reception between amplifier and I/O board or faulty internal data transfer.	Check BUS contacts
No. # 3xx → System range limits exceeded			
363	S: RANGE CUR.IN !: # 363	Current input: The active current value is outside the set range.	▪ Change the start and end values configured. ▪ Check the settings of the external sensor.
392	S: SIGNA. LOW CH1 $: # 392	Attenuation of acoustic measurement section too high.	▪ Check whether the coupling fluid has to be renewed. ▪ The attenuation of the fluid might be too high. ▪ The attenuation of the pipe might be too high. ▪ Check the sensor distance (installation dimensions). ▪ Reduce the number of traverses if possible.
No # 5xx → Application errors			
501	S: SW.-UPDATE ACT. !: # 501	New amplifier or communication module software version being loaded. Currently no other functions are possible.	Wait until the procedure is complete. The device will restart automatically.

No.	Error message/type	Cause	Remedy (spare parts → 🗎 52 ff.)
502	S: UP-/DOWNLOAD ACT. !: # 502	Up- or downloading the device data via operating program. Currently no other functions are possible.	Wait until the procedure is complete.
No. # 6xx → Simulation operation active			
601	S: POS. ZERO RET. !: # 601	Positive zero return active. ☞ Caution! This notice message has the highest display priority!	Switch off positive zero return.
661 to 664	S: SIM. CURR. INP. !: # 661 to 664	Current input simulation active.	Switch off simulation.
691	S: SIM. FAILSAFE !: # 691	Simulation of failsafe mode (outputs) active.	Switch off simulation.
692	S: SIM. MEASURAND !: # 692	Simulation of a measured variable active (e.g. mass flow).	Switch off simulation.
698	S: DEV. TEST ACT. !: # 698	The measuring device is being checked on site via the test and simulation device.	–
743 to 745	S: 0-ADJ.FAIL CHn !: # 743 to 745	The static zero point calibration of Channel 1/2 is not possible or was interrupted.	Check that the flow velocity is = 0 m/s.
752	S: W. THICKNESS CH 1 !: # 752	Channel 1: Wall thickness measurement active	Switch off wall thickness measurement

9.3 Process error messages

Process errors can be defined as either "Fault" or "Notice" messages and can thus be weighted differently.

Note!
See the information on → 40 ff. and → 58.

Type	Error message / No.	Cause	Remedy
P = Process error ϟ = Fault message (with an effect on the inputs/outputs) ! = Notice message (without any effect on the inputs/outputs)			
P $	PIPE DATA? CH1 # 469	The internal diameter is negative.	In the "PIPE DATA" function group, check the values of the functions "OUTER DIAMETER" and "WALL THICKNESS" or "LINING THICKNESS".
P $	S. V. RANGE CH1 # 492	The sound velocity in channel 1/2 is outside the search range of the transmitter.	– Check the installation dimensions. – If possible, check the sound velocity of the liquid or check the specialist literature. If the current sound velocity is outside the defined search range, the corresponding function must be changed in the LIQUID DATA function group. Detailed explanations can be found under the SOUND VELOCITY LIQUID function (6542).
P !	INTERF. CH1 # 495	The wave transmitted in the pipe may superimpose the useful signal. We recommend you alter the sensor configuration in the event of this error message. Caution! The sensor configuration must be changed if the measuring device indicates zero flow or low flow.	In the SENSOR CONFIGURATION function (6882), change the number of traverses from 2 or 4 to 1 or 3 and mount the sensors accordingly.

9.4 Process errors without messages

Symptoms	Rectification
Note! You may have to change or correct certain settings of the function matrix in order to rectify faults. For an explanation of the functions listed below, e.g. DISPLAY DAMPING, see → 69 ff.	
Negative flow values displayed even though the fluid is flowing forwards in the pipe.	1. Check the wiring → 34. If necessary, switch the connections for the terminals for "up" and "down". 2. Change the "INSTL. DIR. SENSOR" function accordingly.
Measured value reading fluctuates even though flow is steady.	1. Check the fluid for presence of gas bubbles. 2. "TIME CONSTANT" function (current output) → Increase value 3. "DISPLAY DAMPING" function → Increase value
The measured value display or measured value output is pulsating or fluctuating, e.g. due to reciprocating pumps, peristaltic pumps, diaphragm pumps or pumps with similar transporting characteristics.	Run the "Pulsating Flow" Quick Setup → 77. If these measures do not rectify the problem, a pulsation damper has to be installed between the pump and the flowmeter.
Measured value reading shown on display, even though the fluid is at a standstill and the measuring tube is full.	1. Check the fluid for presence of gas bubbles. 2. Activate the "LOW FLOW CUTOFF" function, i.e. enter or increase the value for the switch point.
The fault cannot be rectified or some other fault not described above has occurred. In these instances, please contact your Endress+Hauser service organization.	The following options are available for tackling problems of this nature: **Request the services of an Endress+Hauser service technician** If you contact our service organization to have a service technician sent out, please be ready with the following information: – Brief description of the fault – Nameplate specifications: order code and serial number **Return devices to Endress+Hauser** The measures listed must be carried out before you return a measuring device requiring repair or calibration to Endress+Hauser. Always enclose the duly completed "Declaration of Contamination" form with the flowmeter. You will find a preprinted blank of this form at the back of this manual.

9.5 Response of outputs to errors

Note!
The response of the totalizer (failsafe mode) can be configured by means of various functions in the function matrix.

You can use positive zero return to set the signals to their fallback value, for example when operation has to be interrupted while a pipe is being cleaned. This function has priority over all other device functions; simulations are suppressed, for example.

Error response mode of outputs and totalizers		
	Process/system error present	**Positive zero return activated**
Caution! System or process errors defined as "notice messages" have no effect whatsoever on the inputs and outputs. See the information on → 41 ff.		
Totalizer	STOP The totalizers stop if a fault is present. ACTUAL VALUE The fault is ignored. The totalizers continue to count in accordance with the current flow measured value. HOLD VALUE The totalizers continue to count in accordance with the last valid flow measured value (before the fault occurred).	The totalizer stops.

9.6 Spare parts

Only accessories are available for the measuring device → 52.

9.7 Return

→ 5

9.8 Disposal

Observe the regulations applicable in your country!

9.9 Software history

Date	Software version	Changes to software	Operating Instructions
06.2011	2.03.XX	– Added Site Manager – Added Current Output – Added Liner Information to Quick Set-up – Added some ANSI standards to pipe standards	71136630/13.11
04.2010	2.02.XX	No changes to software	71112144/04.10
06.2009	2.02.XX	Original software for Prosonic Flow 93T Portable	71093720/06.09

10 Technical data

10.1 Quick technical data guide

10.1.1 Application

- Measuring the flow rate of liquids in closed piping systems.
- Applications in measuring, control and regulation technology for monitoring processes.

10.1.2 Function and system design

Measuring principle

The measuring system operates on the principle of transit time difference.

Measuring system

The measuring system consists of one transmitter and two sensors.

Transmitter

Prosonic Flow 93T Portable

Sensor

- Prosonic Flow P Clamp On version, Nominal diameters DN 15 to 65 (½ to 2½")
- Prosonic Flow P Clamp On version, Nominal diameters DN 50 to 4000 (2 to 160")
- Prosonic Flow DDU18 (sound velocity measurement),
  Nominal diameters DN 50 to 4000 (2 to 160")
- Prosonic Flow DDU20 (wall thickness measurement),
  - for wall thicknesses from 2 to 50 mm (1/12 to 2") for steel pipes
  - for wall thicknesses from 4 to 15 mm (1/8 to ½") for plastic pipes
    (only suitable for use with PTFE and PE pipes to a certain extent)

10.1.3 Input

Measured variable

Flow velocity
(transit time difference proportional to flow velocity)

Measuring range

Typically v = 0 to 15 (0 to 50 ft/s)

Operable flow range

Over 150 : 1

Input signal

Current input

- Galvanically isolated
- Passive: 0/4 to 20 mA, R_i < 150 Ω , max. 30 V DC
- Terminal voltage: min. 2 V DC to max. 30 V DC
- Time constant selectable (0.05 to 100 s)

- Full scale value adjustable
- Temperature coefficient: typ. 0.002 % o.r./°C (o.r. = of reading)
- Resolution: 0.82 µA

10.1.4 Output

Output signal

Current Output

- Active/Passive selectable
  - Active 0/4 to 20 mA, R_i < 700 Ω
  - Passive 4 to 20 mA, 30VDC, R_i < 150 Ω
- Full Scale adjustable
- Temperature Coefficient type 0.005 % o.r./°C (o.r. = of reading)
- Time Constant Selectable (0.05 to 100 s)

Data logger function

The device has a data logger function. The measured values can be stored in CSV format on an external USB storage device (FAT 16/FAT 32). A recording cycle of between 1 and 99999 seconds can be selected. USB storage devices with a maximum capacity greater than 2 GB should not be used.
Approx. 130 bytes are needed per recording. The standard supplied USB storage device has a maximum capacity of 1 GB.

The following values are stored:
- Time (dd.mm.yyyy hh:mm:ss)
- Flow
- Sound velocity
- Flow velocity
- Signal strength
- Noise ratio
- Counter 1 to 3
- System status
- 0/4 to 20 mA current input (flow rate and active current value)

Each recording is marked with the tag name and device-specific information, such as the serial number for example.

Site Manager function

Allows for storage of programmed sites (pipe data, sensor data, fluid data, etc.) on an eternal USB storage device. Up to 20 sites can be stored.

Low flow cut off

Switch points for low flow cutoff are selectable.

Galvanic isolation

All circuits for inputs, outputs, and power supply are galvanically isolated from each other.

10.1.5 Power supply

Measuring unit electrical connection

→ 📄 34

Connecting the connecting cable

→ 📄 34

Supply voltage

Transmitter

Power unit
- 100 to 240 V AC, 47 to 63 Hz to Power Adapter (12 V DC, 2.5 A)

NiMH accumulator

- Operating time: up to 8 hours
- Charge time: approx. 3.6 hours

Sensor

Powered by the transmitter

Connecting cable (sensor/transmitter)

Only use the connecting cables supplied by Endress+Hauser.

Different versions of the connecting cables are available → 📄 52.
- Cable material: PTFE
- Cable lengths: 5 m (16.4 feet), 10 m (32.8 feet)

Note!
To ensure correct measuring results, route the connecting cable well clear of electrical machines and switching elements.

Potential equalization

For potential equalization, no special measures are necessary.

10.1.6 Performance characteristics

Reference operating conditions

- Fluid temperature: +20 to +30 °C
- Ambient temperature: +22 °C ± 2 K
- Warm-up period: 30 minutes

Installation:
- Sensors and transmitter are grounded.
- The measuring sensors are correctly installed.

Maximum measured error

The measured error depends on a number of factors. A distinction is made between the measured error of the device (Prosonic Flow 93T = 0.5 % of the measured value) and an additional installation-specific measured error (typically 1.5 % of the measured value) that is independent of the device.
The installation-specific measured error depends on the installation conditions on site, such as the nominal diameter, wall thickness, real pipe geometry, fluid, etc.
The sum of the two measured errors is the measured error at the measuring point.

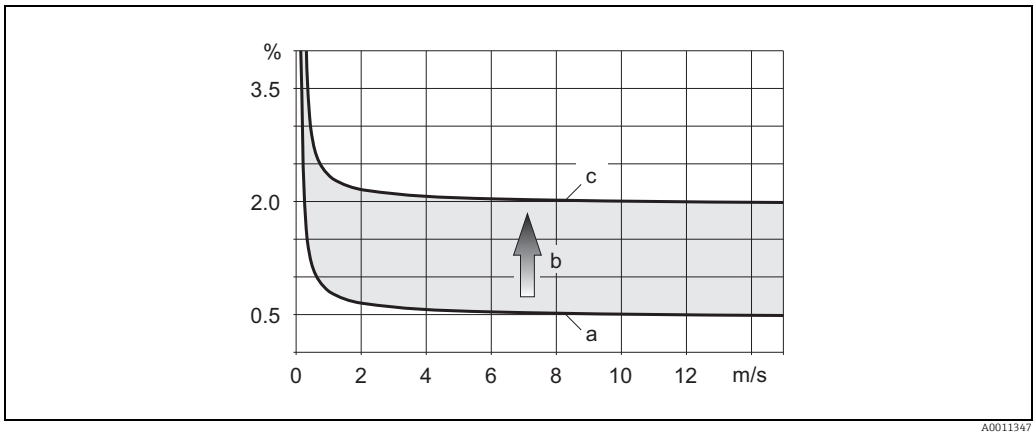

Fig. 44: Example of the measured error in a pipe with a nominal diameter DN > 200 (8")

a Measured error of the device (0.5 % o.r. ± 3 mm/s)
b Measured error due to installation conditions (typically 1.5 % o.r.)
c Measured error at the measuring point: 0.5 % o.r. ± 3 mm/s + 1.5 % o.r. = 2 % o.r. ± 3 mm/s

Measured error at the measuring point

The measured error at the measuring point is made up of the measured error of the device (0.5 % o.r.) and the measured error resulting from the installation conditions on site. Given a flow velocity > 0.3 m/s (1 ft/s) and a Reynolds number > 10 000, the following are typical error limits:

Nominal diameter	Device error limits	+	Installation-specific error limits (typical)	→	Error limits at the measuring point (typical)
DN 15 (½")	±0.5 % o.r. ± 5 mm/s	+	±2.5 % o.r.	→	±3 % o.r. ± 5 mm/s
DN 25 to 200 (1 to 8")	±0.5 % o.r. ± 7.5 mm/s	+	±1.5 % o.r.	→	±2 % o.r. ± 7.5 mm/s
> DN 200 (8")	±0.5 % o.r. ± 3 mm/s	+	±1.5 % o.r.	→	±2 % o.r. ± 3 mm/s

o.r. = of reading

Measurement Report

If required, the device can be supplied with a factory measurement report. To certify the performance of the device, a measurement is performed under reference conditions. Here, the sensors are mounted on a pipe with a nominal diameter of DN 50 (2") or DN 100 (4") respectively.

The measurement report guarantees the following error limits of the device [at a flow velocity > 0.3 m/s (1 ft/s) and a Reynolds number > 10000]:

Nominal diameter	Guaranteed error limits of the device
DN 50 (2")	±0.5 % o.r. ± 5 mm/s
DN 100 (4")	±0.5 % o.r. ± 7.5 mm/s

o.r. = of reading

Repeatability

±0.3 % for flow velocities > 0.3 m/s (1 ft/s)

10.1.7 Operating conditions: installation

Installation instructions

Mounting location

→ 📄 9

Orientation

→ 📄 10

Inlet and outlet run

→ 📄 11

Length of connecting cable (sensor/transmitter)

The connecting cable is available in the following lengths:
- 5 m (16.4 ft)
- 10 m (32.8 ft)

10.1.8 Operating conditions: environment

Ambient temperature range

Transmitter

0 to +60 °C (+32 to +140 °F)

Prosonic Flow P sensor

DN 15 to 65 (½ to 2½")
- Standard: −40 to +100 °C (−40 to +212 °F)
- Optional: −40 to +150 °C (−40 to +302 °F)

DN 50 to 4000 (2 to 160")
- Standard: −40 to +80 °C (−40 to +176 °F)
- Optional: 0 to +170 °C (+32 to +338 °F)

DDU18 sensor (accessories: sound velocity measurement)

- Standard: −40 to +80 °C (−40 to +176 °F)
- Optional: 0 to +170 °C (+32 to +338 °F)

DDU20 sensor (accessories: wall thickness measurement)

−20 to +60 °C (−4 to +140 °F)

Connecting cable (sensor/transmitter)

−40 to +170 °C (−40 to +338 °F)

Storage temperature

The storage temperature corresponds to the ambient temperature range.

Degree of protection

Transmitter

IP 40

Sensor

IP 68 (NEMA 6P), connection IP 50

DDU18 sensor (accessories: sound velocity measurement)

IP 68 (NEMA 6P), connection IP 50

DDU20 sensor (accessories: wall thickness measurement)

IP 67 (NEMA 4X), connection IP 50

Shock and vibration resistance

According to IEC 68-2-6

Electromagnetic compatibility (EMC)

Electromagnetic compatibility (EMC requirements) according to IEC/EN 61326 "Emission to class A requirements" and NAMUR Recommendation NE 21 and NE 43.

10.1.9 Operating conditions: process

Medium temperature range

Prosonic Flow P sensor

DN 15 to 65 (½ to 2½")
- Standard: −40 to +100 °C (−40 to +212 °F)
- Optional: −40 to +150 °C (−40 to +302 °F)

DN 50 to 4000 (2 to 160")
- Standard: −40 to +80 °C (−40 to +176 °F)
- Optional: 0 to +170 °C (+32 to +338 °F)

DDU18 sensor (accessories: sound velocity measurement)

- Standard: −40 to +80 °C (−40 to +176 °F)
- Optional: 0 to +170 °C (+32 to +338 °F)

DDU20 sensor (accessories: wall thickness measurement)

−10 to +60 °C (+14 to +140 °F)

Medium pressure range (nominal pressure)

No pressure limitation, however perfect measurement requires that the static fluid pressure is higher than vapor pressure.

Pressure loss

There is no pressure loss.

10.1.10 Mechanical construction

Design / dimensions

The dimensions and lengths of the sensor and transmitter are provided in the separate "Technical Information" document on the device in question. This can be downloaded as a PDF file from www.endress.com.
A list of the "Technical Information" documents available is provided on → 68.

Weight

Transmitter

1.6 kg (3.53 lbs)

Sensor Prosonic Flow P

- DN 15 to 65 (½ to 2½") (incl. mounting material): 1.78 kg (3.9 lbs)
- DN 50 to 4000 (2 to 160") (incl. mounting material): 2.8 kg (6.2 lbs)

Sensor (accessories)

- Prosonic Flow DDU18 (incl. mounting material): 2.4 kg (5.3 lbs)
- Prosonic Flow DDU20 (incl. mounting material): 0.23 kg (0.5 lbs)

Note!
Weight information without packaging material.

Materials

Transmitter

Plastic

Sensor Prosonic Flow P

DN 15 to 65 (½ to 2½")
- Sensor holder: corrosion protected aluminum, stainless steel 1.4301
- Sensor housing: stainless steel 1.4301
- Sensor contact surfaces: chemically stable plastic

DN 50 to 4000 (2 to 160")
- Sensor holder: stainless steel 1.4301
- Sensor housing: stainless steel 1.4301
- Strapping bands/bracket: textile or stainless steel 1.4301
- Sensor contact surfaces: chemically stable plastic

Sensor (accessories)

Prosonic Flow DDU18; Prosonic Flow DDU20
- Sensor holder: stainless steel 1.4301
- Sensor housing: stainless steel 1.4301
- Strapping bands/bracket: textile or stainless steel 1.4301
- Sensor contact surfaces: chemically stable plastic

Connecting cable (sensor/transmitter)

PTFE connecting cable
- Cable sheath: PTFE
- Cable connector: stainless steel

10.1.11 Human interface

Display elements

- Liquid crystal display: illuminated, four lines each with 16 characters
- Custom configuration for presenting different measured values and status variables

Operating elements

- Local operation with three optical keys
- Application specific Quick Setup menus for straightforward commissioning

Language groups

Language groups available for operation in different countries:

- Western Europe and America (WEA):
  English, German, Spanish, Italian, French, Dutch and Portuguese
- Eastern Europe/Scandinavia (EES):
  English, Russian, Polish, Norwegian, Finnish, Swedish and Czech
- South and Eastern Asia (SEA):
  English, Japanese, Indonesian
- China (CN):
  English, Chinese

You can change the language group via the FieldCare operating program.

Remote operation

Operation via FieldCare, with:
- Option of loading or saving preprogrammed measuring points
- Configuration logging
- Measured value visualization

10.1.12 Certificates and approvals

CE mark

The measuring system is in conformity with the statutory requirements of the EC Directives. Endress+Hauser confirms successful testing of the device by affixing to it the CE mark.

C-Tick mark

The measuring system is in conformity with the EMC requirements of the "Australian Communications and Media Authority (ACMA)".

Other standards and guidelines

- EN 60529
  Degrees of protection provided by enclosures (IP code).
- EN 61010-1
  Safety requirements for electrical equipment for measurement, control and laboratory use.
- IEC/EN 61326
  "Emission in accordance with Class A requirements".
  Electromagnetic compatibility (EMC requirements).
- ANSI/ISA-S82.01
  Safety Standard for Electrical and Electronic Test, Measuring, Controlling and Related Equipment - General Requirements. Pollution Degree 2, Installation Category II.

- CAN/CSA-C22.2 No. 1010.1-92
  Safety Requirements for Electrical Equipment for Measurement and Control and Laboratory Use.
  Pollution Degree 2.

10.1.13 Ordering information

The Endress+Hauser service organization can provide detailed ordering information and information on the order codes on request.

10.1.14 Documentation

- Flow measurement (FA005D/06)
- Technical Information for Prosonic Flow 93T Portable (TI00085D/06)

11 Description of Device Functions

11.1 Function matrix

11.1.1 General layout of the function matrix

The function matrix consists of four levels:

Blocks -> Groups -> Function groups -> Functions

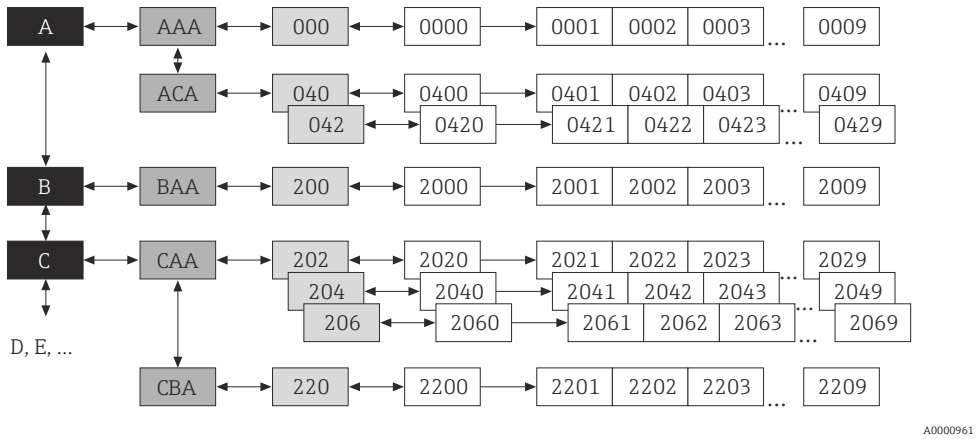

Blocks (A, B, C, etc.)
The blocks are the highest-level grouping of the operation options for the device. Examples of blocks available are MEASURED VARIABLES, QUICK SETUP, USER INTERFACE, TOTALIZERS, etc.

Groups (AAA, AEA, CAA, etc.)
A block consists of one or more groups. Each group represents a more detailed selection of the operation options in the higher-order block. Examples of groups available in the USER INTERFACE block are CONTROL, MAIN LINE, ADDITIONAL LINE, etc.

Functions (0000, 0001, 0002, etc.)
Each function group consists of one or more functions. The functions are used to operate and parameterize the device. Numerical values can be entered or parameters selected and saved. Examples of functions available in the BASIC CONFIGURATION function group are LANGUAGE, DISPLAY DAMPING, CONTRAST LCD, etc.
If the operating language of the device is to be changed, for example, proceed as follows:

1. Select the block USER INTERFACE.
2. Select the group CONTROL.
3. Select the function group BASIC CONFIGURATION.
4. Select the function LANGUAGE (here you can set the language required).

Function groups (000, 020, 060, etc.)
A group consists of one or more function groups. Each function group represents a more detailed selection of the operation options in the higher-order group. Examples of function groups available in the CONTROL group are BASIC CONFIGURATION, UNLOCKING/ LOCKING, OPERATION, etc.

11.1.2 Codes identifying cells

Each cell (block, group, function group and function) in the function matrix has an individual, unique code.

Blocks:

The code is a letter (A, B, C, etc.).

Groups:

The code consists of three letters (AAA, ABA, BAA, etc.).
The first letter matches the block code (i.e. each group in block A has a code starting with an A_ _; the codes of the groups in block B start with a B _ _, and so on). The other two letters are for identifying the group within the respective block.

Function groups:

The code consists of three digits (000, 001, 100, etc.).

Functions:

The code consists of four digits (0000, 0001, 0201, etc.).
The first three digits are the same as the code for the function group.
The last digit in the code is a counter for the functions in the function group, incrementing from 0 to 9 (e.g. function 0005 is the sixth function in group 000).

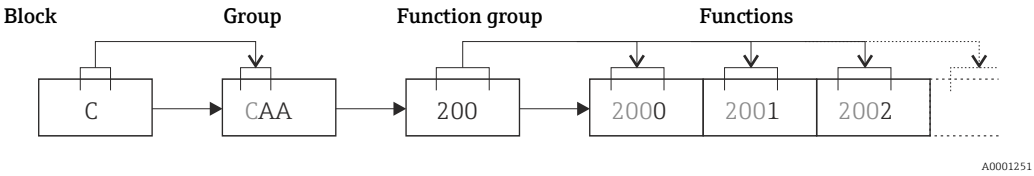

11.2 Function matrix of Prosonic Flow 93T Portable

Blocks		→	Groups		→	Function groups		Functions
MEASURED VARIABLES	A	→	MEASURING VALUES	AAA	→	MAIN VALUES CH1	000	→ 73
			SYSTEM UNITS	ACA	→	CONFIGURATION	040	→ 74
						ADDITIONAL CONFIGURATION	042	→ 75
			SPECIAL UNITS	AEA	→	ARBITRARY UNIT	060	→ 76
QUICK SETUP	B	→		→				→ 76
USER INTERFACE	C	→	CONTROL	CAA	→	BASIC CONFIGURATION	200	→ 78
						UNLOCKING/LOCKING	202	→ 79
						OPERATION	204	→ 80
			MAIN LINE	CCA	→	CONFIGURATION	220	→ 81
						MULTIPLEX	222	→ 82
			ADDITIONAL LINE	CEA	→	CONFIGURATION	240	→ 81
						MULTIPLEX	242	→ 82
			INFORMATION LINE	CGA	→	CONFIGURATION	260	→ 81
						MULTIPLEX	262	→ 82
TOTALIZER	D	→	TOTALIZER 1 TOTALIZER 2 TOTALIZER 3	DAA DAB DAC	→	CONFIGURATION	300	→ 83
						OPERATION	304	→ 80
			HANDLING TOTALIZER	DJA	→			→ 92
OUTPUTS	E	→	DATA LOGGER	ELA	→	CONFIGURATION	490	→ 107
						INFORMATION	498	→ 107
						SITE MANAGER	499	→ 103
			CURRENT OUTPUT	EAA	→	CONFIGURATION	400	→ 107
						OPERATION	404	→ 108
INPUTS	F	→	CURRENT INPUT	FCA	→	CONFIGURATION	520	→ 108
						OPERATION	524	→ 108
BASIC FUNCTIONS	G	→	PROCESS PARAMETER CH1	GIA	→	CONFIGURATION	640	→ 109
						ADJUSTMENT	648	→ 111
						PIPE DATA	652	→ 111
						LIQUID DATA	654	→ 114
			SYSTEM PARAMETER CH1	GLA	→	CONFIGURATION	660	→ 117
			SENSOR DATA CH1	GNA	→	SENSOR PARAM.	688	→ 118
						CALIBRATION DATA	689	→ 120

Blocks		→	Groups		→	Function groups		Functions
SUPERVISION	J	→	SYSTEM	JAA	→	CONFIGURATION	800	→ 121
						OPERATION	804	→ 122
			VERSION INFO	JCA	→	DEVICE	810	→ 123
						SENSOR	820	→ 123
						AMPLIFIER	822	→ 124
						I/O MODULE	830	→ 124
						I/O SUBMODULE 1	832	→ 124
						I/O SUBMODULE 3	834	→ 124

11.3 Block MEASURED VARIABLES

11.3.1 Group MEASURING VALUES

Function group MAIN VALUES CH1

Functional description MEASURED VARIABLES → MEASURING VALUES → MAIN VALUES CH1	
The measuring values of channel 1 currently being measured are displayed in this function group. Note! ▪ The engineering units of all the measured variables shown here can be set in the SYSTEM UNITS group. ▪ If the fluid in the pipe flows backwards, a negative sign prefixes the flow reading on the display.	
VOLUME FLOW CH1 (0001)	The volume flow currently measured appears on the display (channel 1). **User interface** 5-digit floating-point number, including unit and sign e.g. 5.545 dm^3/min; 1.4359 kg/h; 731.63 gal/d, etc.
SOUND VELOCITY (0002)	The sound velocity currently measured in the liquid appears on the display (channel 1). **User interface** 5-digit fixed-point number, incl. units e.g. 1400.0 m/s, 5249.3 ft/s, etc.
FLOW VELOCITY CH1 (0003)	The flow velocity currently measured appears on the display (channel 1). **User interface** 5-digit floating-point number, including unit and sign e.g. 8.0000 m/s, 26.247 ft/s, etc.
SIGNAL STRENGTH CH1 (0007)	The signal strength appears on the display (channel 1). **User interface** 4-digit fixed-point number e.g. 80.0 Note! To ensure reliable measurement takes place, Prosonic Flow requires a signal strength of > 30.
VOLUME FLOW DEVICE 2 (0011)	The current actual value of the input current at the current input appears on the display. **User interface** 0.0 to 25 mA

11.3.2 Group SYSTEM UNITS

Function group CONFIGURATION

Functional description MEASURED VARIABLES → SYSTEM UNITS → CONFIGURATION	
UNIT VOLUME FLOW (0402)	Use this function to select the unit for displaying the volume flow. The unit you select here is also valid for low flow cut off. **Options** Metric: Cubic centimeter → cm^3/s; cm^3/min; cm^3/h; cm^3/day Cubic decimeter → dm^3/s; dm^3/min; dm^3/h; dm^3/day Cubic meter → m^3/s; m^3/min; m^3/h; m^3/day Milliliter → ml/s; ml/min; ml/h; ml/day Liter→ l/s; l/min; l/h; l/day Hectoliter → hl/s; hl/min; hl/h; hl/day Megaliter →Ml/s; Ml/min; Ml/h; Ml/day US: Cubic centimeter → cc/s; cc/min; cc/h; cc/day Acre foot → af/s; af/min; af/h; af/day Cubic foot → ft^3/s; ft^3/min; ft^3/h; ft^3/day Fluid ounce → oz f/s; oz f/min; oz f/h; oz f/day Gallon → gal/s; gal/min; gal/h; gal/day, US kgal/s; US kgal/min; US kgal/h; US kgal/day Million gallon → Mgal/s; Mgal/min; Mgal/h; Mgal/day Barrel (normal fluids: 31.5 gal/bbl) → bbl/s; bbl/min; bbl/h; bbl/day Barrel (beer: 31.0 gal/bbl) → bbl/s; bbl/min; bbl/h; bbl/day Barrel (petrochemicals: 42.0 gal/bbl) → bbl/s; bbl/min; bbl/h; bbl/day Barrel (filling tanks: 55.0 gal/bbl) → bbl/s; bbl/min; bbl/h; bbl/day Imperial: Gallon → gal/s; gal/min; gal/h; gal/day Million gallon/Mega gallon → Mgal/s; Mgal/min; Mgal/h; Mgal/day Barrel (beer: 31.0 gal/bbl) → bbl/s; bbl/min; bbl/h; bbl/day Barrel (petrochemicals: 34.97 gal/bbl → bbl/s; bbl/min; bbl/h; bbl/day Barrel (filling tanks: 55.0 gal/bbl) → bbl/s; bbl/min; bbl/h; bbl/day Arbitrary unit (from ARB. UNIT function group → 🗎 76): _ _ _ _ → _ _ _ _/s; _ _ _ _/min; _ _ _ _/h; _ _ _ _/day **Factory setting** l/s
UNIT VOLUME (0403)	Use this function to select the unit for displaying the volume. **Options** Metric: cm^3; dm^3; m^3; ml; l; hl; Ml MEGA US: cc; af; ft^3; oz f; gal; kgal; Mgal; bbl (NORMAL FLUIDS); bbl (BEER); bbl (PETROCHEMICALS), bbl (FILLING TANKS) Imperial: gal; Mgal; bbl (BEER); bbl (PETROCHEMICALS) Arbitrary unit (from ARBITRARY UNIT function group → 🗎 76): _ _ _ _ **Factory setting** Liter Note! The unit of the totalizers is independent of your choice here. The unit for each totalizer is selected separately for the totalizer in question.

Function group ADDITIONAL CONFIGURATION

Functional description MEASURED VARIABLES → SYSTEM UNITS → ADDITIONAL CONFIGURATION	
UNIT TEMPERATURE (0422)	Use this function to select the unit for displaying the fluid temperature. **Options** °C (Celsius) K (Kelvin) °F (Fahrenheit) R (Rankine) **Factory setting** ° C Note! The fluid temperature is entered in the function TEMPERATURE (→ 114).
UNIT VISCOSITY (0423)	Use this function to select the unit for liquid viscosity. **Options** mm^2/s cSt St **Factory setting** mm^2/s
UNIT LENGTH (0424)	Use this function to select the unit for the measure of length. The unit you select here is valid for: ▪ Nominal diameter ▪ Diameter ▪ Wall thickness ▪ Liner thickness ▪ Path length ▪ Wire length ▪ Sensor spacing **Options** MILLIMETER INCH **Factory setting** MILLIMETER
UNIT VELOCITY (0425)	Use this function to select the unit for displaying the velocity. The unit you select here is valid for: ▪ Sound velocity ▪ Flow velocity **Options** mm^2/s cSt St **Factory setting** m/s
FORMAT DATE/TIME (0429)	Use this function to select the date and time format of the calibration history. **Options** DD.MM.YY 24 H MM/DD/YY 12 H A/P DD.MM.YY 12 H A/P MM/DD/YY 24 H **Factory setting** DD.MM.YY 24 H

11.3.3 Group SPECIAL UNITS

Function group ARBITRARY UNITS

Functional description MEASURED VARIABLES → SPECIAL UNITS → ARBITRARY UNIT	
Use this function group to define an arbitrary unit for the flow rate variable.	
TEXT ARBITRARY VOLUME (0602)	Use this function to enter a text for the selectable volume (flow) unit. You define only the text, the unit of time is provided from a choice of options (s, min, h, day). **User input** 7-digit floating-point number **Factory setting** _ _ _ _ (No text) **Example** If your text entry is "GLAS", this text string appears on the display complete with the unit of time, e.g. "GLAS/min": GLAS = Volume (text input) GLAS / min = Volume flow as shown (on the display)
FACTOR ARBITRARY VOLUME (0603)	Use this function to define a quantity factor (without time) for the free selectable unit. The volume unit on which this factor is based is one liter. **User input** xxxxxxx (max. 4 characters) Valid characters are A–Z, 0–9, +, –, decimal point, white space or underscore **Factory setting** 1 **Reference quantity** Liter **Example** The volume of a glass is 0.5 l→ 2 glasses = 1 liter User input: 2

11.4 Block QUICK SETUP

Functional description QUICK SETUP	
Description of the procedure and illustration of the subsequent Quick Setups → 📄 44 ff.	
QUICK SETUP SENSOR INSTALLATION (1001)	Use this function to start the Setup menu for sensor installation. **Options** YES NO **Factory setting** NO
QUICK SETUP COMMISSIONING (1002)	Use this function to start the Setup menu for commissioning. **Options** YES NO **Factory setting** NO

Functional description QUICK SETUP	
QUICK SETUP PULSATING FLOW	Use this function to start the Setup menu for commissioning. **Options** YES NO **Factory setting** NO

11.5 Block USER INTERFACE

11.5.1 Group CONTROL

Function group BASIC CONFIGURATION

Functional description USER INTERFACE → CONTROL → BASIC CONFIGURATION	
LANGUAGE (2000)	Use this function to select the language for all texts, parameters and messages shown on the local display. Note! The displayed options depend on the available language group shown in the LANGUAGE GROUP (8226) function. **Language groups** Language groups WEST EU / USA ENGLISH DEUTSCH FRANCAIS ESPANOL ITALIANO NEDERLANDS PORTUGESE Language groups EAST EU / SCAND. ENGLISH NORSK SVENSKA SUOMI POLISH CZECH RUSSIAN Language group ASIA ENGLISH BAHASA INDONESIA JAPANESE (syllabary) Language group CHINESE CHINESE ENGLISH **Factory setting** Country-dependent (→ 125) Note! ▪ If you press the keys simultaneously during startup, the language defaults to "ENGLISH". ▪ You can change the language group via the operating program "FieldCare".
DISPLAY DAMPING (2002)	Use this function to enter a time constant defining how the display reacts to severely fluctuating flow variables, either very quickly (enter a low time constant) or with damping (enter a high time constant). **User input** 0 to 100 seconds **Factory setting** 1 s Note! Setting the time constant to zero seconds switches off damping.

Functional description USER INTERFACE → CONTROL → BASIC CONFIGURATION	
CONTRAST LCD (2003)	Use this function to optimize display contrast to suit local operating conditions. **User input** 10 to 100% **Factory setting** 50%
BACKLIGHT (2004)	Use this function to optimize the backlight to suit local operating conditions. **User input** 10 to 100% **Factory setting** 50%
SHUT BACKLIGHT (2005)	Use this function to specify the conditions to automatically switch off background lighting. **Options** 30 sec. 1 min. 5 min. Always ON **Factory setting** Always ON

Function group UNLOCKING/LOCKING

Functional description USER INTERFACE → CONTROL → UNLOCKING/LOCKING	
ACCESS CODE (2020)	All data of the measuring system are protected against inadvertent change. Programming is disabled and the settings cannot be changed until a code is entered in this function. If you press the ⊞ keys in any function, the measuring system automatically goes to this function and the prompt to enter the code appears on the display (when programming is disabled). You can enable programming by entering your personal code (factory setting = 93). **User input** 0 to 9999 (max. 4-digit number) **Factory setting** Max. 4-digit number: 0 to 9999 Note! ▪ The programming levels are disabled if you do not press a key within 60 seconds following automatic return to the HOME position. ▪ You can also disable programming in this function by entering any number (other than the defined private code). ▪ The Endress+Hauser service organization can be of assistance if you mislay your personal code.

Functional description USER INTERFACE → CONTROL → UNLOCKING/LOCKING	
DEFINE PRIVATE CODE (2021)	Use this function to enter a personal code number for enabling programming. **User input** 0 to 9999 (max. 4-digit number) **Factory setting** 93 Note! ▪ Programming is always enabled with the code "0". ▪ Programming has to be enabled before this code can be changed. When programming is disabled this function is not available, thus preventing others from accessing your personal code.
STATUS ACCESS (2022)	Use this function to check the access status for the function matrix. **User interface** ACCESS CUSTOMER (parameterization possible) LOCKED (parameterization disabled) **Factory setting** 50%
ACCESS CODE COUNTER (2023)	The number of times the private or service code was entered to access the device appears on the display. **User interface** Integer (delivery status: 0)

Function group OPERATION

Functional description USER INTERFACE → CONTROL → OPERATION	
TEST DISPLAY (2040)	Use this function to test the operability of the local display and its pixels. **Options** YES NO **Factory setting** OFF Test sequence: 1. Start the test by selecting ON. 2. All pixels of the main line, additional line and information line are darkened for minimum 0.75 seconds. 3. Main line, additional line and information line show an "8" in each field for minimum 0.75 seconds. 4. Main line, additional line and information line show a "0" in each field for minimum 0.75 seconds. 5. Main line, additional line and information line show nothing (blank display) for minimum 0.75 seconds. When the test completes the local display returns to its initial state and the setting changes to OFF.

11.5.2 Group MAIN LINE

Function group CONFIGURATION

Functional description USER INTERFACE → MAIN LINE → CONFIGURATION	
1 = Main line 2 = Additional line 3 = Information line	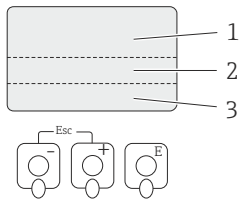
ASSIGN (2200)	Use this function to define the display value assigned to the main line (the top line of the local display) during normal measuring operation. **Options** OFF VOLUME FLOW (CH1) VOLUME FLOW IN % (CH1) SOUND VELOCITY (CH1) SIGNAL STRENGTH (CH1) FLOW VELOCITY (CH1) ACTUAL CURRENT 1 TOTALIZER (1 to 3) ACTUAL CURRENT INPUT VOLUME FLOW DEVICE 2 **Factory setting** VOLUME FLOW DEVICES (CH1)
100% VALUE (2201)	Note! This function is not available unless VOLUME FLOW IN % was selected in the ASSIGN function (2200). Use this function to define the flow value to be shown on the display as the 100% value. **User input** 5-digit floating-point number **Factory setting** 10 l/s
FORMAT (2202)	Use this function to define the maximum number of places after the decimal point displayed for the reading in the main line. **Options** XXXXX. - XXXX.X - XXX.XX - XX.XXX -X.XXXX **Factory setting** X.XXXX Note! ▪ Note that this setting only affects the reading as it appears on the display, it has no influence on the accuracy of the system's calculations. ▪ The places after the decimal point as computed by the measuring device cannot always be displayed, depending on this setting and the engineering unit. In such instances an arrow appears on the display between the measuring value and the engineering unit (e.g. 1.2→ m3/h), indicating that the measuring system is computing with more decimal places than can be shown on the display.

Function group MULTIPLEX

Functional description USER INTERFACE → MAIN LINE → MULTIPLEX	
ASSIGN (2220)	Use this function to define a second reading to be displayed in the main line alternately (every 10 seconds) with the reading defined in the function ASSIGN (2200). **Options** OFF VOLUME FLOW (CH1) VOLUME FLOW IN % (CH1) SOUND VELOCITY (CH1) SIGNAL STRENGTH (CH1) FLOW VELOCITY (CH1) ACTUAL CURRENT 1 TOTALIZER (1 to 3) ACTUAL CURRENT INPUT VOLUME FLOW DEVICE 2 ACCUMULATOR CHARGE **Factory setting** OFF
100% VALUE (2221)	Note! This function is not available unless VOLUME FLOW IN % was selected in the ASSIGN function (2220). Use this function to define the flow value to be shown on the display as the 100% value. **User input** 5-digit floating-point number **Factory setting** Depends on nominal diameter and country, [value] / [dm^3 to m^3 or US-gal to US-Mgal] Corresponds to the factory setting for the full scale value (→ 125).
FORMAT (2222)	Use this function to define the maximum number of places after the decimal point displayed for the reading in the main line. **Options** XXXXX. - XXXX.X - XXX.XX - XX.XXX -X.XXXX **Factory setting** X.XXXX Note! ▪ Note that this setting only affects the reading as it appears on the display, it has no influence on the accuracy of the system's calculations. ▪ The places after the decimal point as computed by the measuring device cannot always be displayed, depending on this setting and the engineering unit. In such instances an arrow appears on the display between the measuring value and the engineering unit (e.g. 1.2→ m3/h), indicating that the measuring system is computing with more decimal places than can be shown on the display.

11.5.3 Group ADDITIONAL LINE

Function group CONFIGURATION

Functional description USER INTERFACE → ADDITIONAL LINE → CONFIGURATION	
1 = Main line 2 = Additional line 3 = Information line	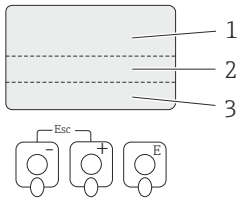
ASSIGN (2400)	Use this function to define the display value assigned to the additional line (the middle line of the local display) during normal measuring operation. **Options** OFF VOLUME FLOW (CH1) VOLUME FLOW IN % (CH1) SOUND VELOCITY (CH1) SIGNAL STRENGTH (CH1) FLOW VELOCITY (CH1) VOLUME FLOW BARGRAPH IN % (CH1) SIGNAL BARGRAPH IN % (CH1) ACTUAL CURRENT 1 TOTALIZER (1 to 3) FLOW DIRECTION ACCUMULATED CHARGE ACTUAL CURRENT INPUT VOLUME FLOW DEVICE 2 **Factory setting** TOTALIZER 1
100% VALUE (2401)	Note! This function is not available unless VOLUME FLOW IN % was selected in the ASSIGN function (2400). ▪ VOLUME FLOW IN % (CH1) ▪ VOLUME FLOW BARGRAPH IN % (CH1) ▪ SIGNAL BARGRAPH IN % (CH1) Use this function to define the flow value to be shown on the display as the 100% value. **User input** 5-digit floating-point number **Factory setting** Depends on nominal diameter and country, [value] / [dm^3 to m^3 or US-gal to US-Mgal] Corresponds to the factory setting for the full scale value (→ 125).

Functional description USER INTERFACE → ADDITIONAL LINE → CONFIGURATION	
FORMAT (2402)	Note! This function is not available unless a number was selected in the function ASSIGN (2400). Use this function to define the maximum number of places after the decimal point displayed for the reading in the additional line. **Options** XXXXX. - XXXX.X - XXX.XX - XX.XXX -X.XXXX **Factory setting** X.XXXX Note! ▪ Note that this setting only affects the reading as it appears on the display, it has no influence on the accuracy of the system's calculations. ▪ The places after the decimal point as computed by the measuring device cannot always be displayed, depending on this setting and the engineering unit. In such instances an arrow appears on the display between the measuring value and the engineering unit (e.g. 1.2→ m3/h), indicating that the measuring system is computing with more decimal places than can be shown on the display.
DISPLAY MODE (2403)	Note! This function is only available if VOLUME FLOW BARGRAPH IN % or SIGNAL BARGRAPH IN % was selected in the function ASSIGN (2400). Use this function to define the format of the bar graph. **Options** STANDARD (Simple bar graph with 25 / 50 / 75% gradations and integrated sign). A0001258 SYMMETRY (Symmetrical bar graph for positive and negative directions of flow, with −50 / 0 / +50% gradations and integrated sign). 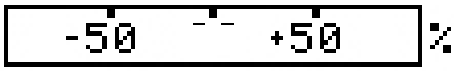 A0001259 **Factory setting** STANDARD

Function group MULTIPLEX

Functional description USER INTERFACE → ADDITIONAL LINE → MULTIPLEX	
ASSIGN (2420)	Use this function to define a second reading to be displayed in the main line alternately (every 10 seconds) with the reading defined in the function ASSIGN (2400). **Options** OFF VOLUME FLOW (CH1) VOLUME FLOW IN % (CH1) SOUND VELOCITY (CH1) SIGNAL STRENGTH (CH1) FLOW VELOCITY (CH1) VOLUME FLOW BARGRAPH IN % (CH1) SIGNAL BARGRAPH IN % (CH1) ACTUAL CURRENT 1 TOTALIZER (1 to 3) FLOW DIRECTION ACCUMULATOR CHARGE ACTUAL CURRENT INPUT VOLUME FLOW DEVICE 2 **Factory setting** OFF Note! Multiplex mode is suspended as soon as a fault / notice message is generated. The message in question appears on the display. ▪ Fault message (identified by a lightning icon): – If ON was selected in the function ACKNOWLEDGE FAULTS (8004), multiplex mode is resumed as soon as the fault has been acknowledged and is no longer active. – If OFF was selected in the function ACKNOWLEDGE FAULTS (8004), multiplex mode is resumed as soon as the fault is no longer active. ▪ Notice message (identified by an exclamation mark): – Multiplex mode is resumed as soon as the notice message is no longer active. If a channel is not visible, it does not appear in the options. Channels can be displayed or hidden by means of the function MEASUREMENT (6880).
100% VALUE (2421)	Note! This function is not available unless VOLUME FLOW IN % was selected in the ASSIGN function (2420). ▪ VOLUME FLOW IN % (CH1) ▪ VOLUME FLOW BARGRAPH IN % (CH1) ▪ SIGNAL BARGRAPH IN % (CH1) Use this function to define the flow value to be shown on the display as the 100% value. **User input** 5-digit floating-point number **Factory setting** Depends on nominal diameter and country, [value] / [dm^3 to m^3 or US-gal to US-Mgal] Corresponds to the factory setting for the full scale value (→ 📄 125).

Functional description USER INTERFACE → ADDITIONAL LINE → MULTIPLEX	
FORMAT (2422)	Note! This function is not available unless a number was selected in the function ASSIGN (2420). Use this function to define the maximum number of places after the decimal point displayed for the reading in the main line. **Options** XXXXX. - XXXX.X - XXX.XX - XX.XXX -X.XXXX **Factory setting** X.XXXX Note! ▪ Note that this setting only affects the reading as it appears on the display, it has no influence on the accuracy of the system's calculations. ▪ The places after the decimal point as computed by the measuring device cannot always be displayed, depending on this setting and the engineering unit. In such instances an arrow appears on the display between the measuring value and the engineering unit (e.g. 1.2 →m3/h), indicating that the measuring system is computing with more decimal places than can be shown on the display.
DISPLAY MODE (2423)	Note! This function is only available if VOLUME FLOW BARGRAPH IN % or SIGNAL BARGRAPH IN % was selected in the function ASSIGN (2420). Use this function to define the format of the bar graph. **Options** STANDARD (Simple bar graph with 25 / 50 / 75% gradations and integrated sign). A0001258 SYMMETRY (Symmetrical bar graph for positive and negative directions of flow, with −50 / 0 / +50% gradations and integrated sign). A0001259 **Factory setting** STANDARD

11.5.4 Group INFORMATION LINE

Function group CONFIGURATION

Functional description USER INTERFACE → INFORMATION LINE → CONFIGURATION	
1 = Main line 2 = Additional line 3 = Information line	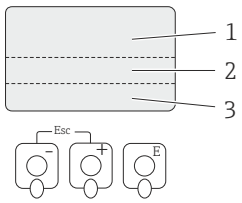
ASSIGN (2600)	Use this function to define the display value assigned to the additional line (the bottom line of the local display) during normal measuring operation. **Options** OFF VOLUME FLOW (CH1) VOLUME FLOW IN % (CH1) SOUND VELOCITY (CH1) SIGNAL STRENGTH (CH1) FLOW VELOCITY (CH1) VOLUME FLOW BARGRAPH IN % (CH1) SIGNAL BARGRAPH IN % (CH1) ACTUAL CURRENT 1 TOTALIZER (1 to 3) OPERATING/SYSTEM CONDITIONS FLOW DIRECTION ACCUMULATOR CHARGE ACTUAL CURRENT INPUT VOLUME FLOW DEVICE 2 **Factory setting** ACCUMULATOR CHARGE
100% VALUE (2601)	Note! This function is not available unless VOLUME FLOW IN % was selected in the ASSIGN function (2600). ▪ VOLUME FLOW IN % (CH1) ▪ VOLUME FLOW BARGRAPH IN % (CH1) ▪ SIGNAL BARGRAPH IN % (CH1) Use this function to define the flow value to be shown on the display as the 100% value. **User input** 5-digit floating-point number **Factory setting** Depends on nominal diameter and country, [value] / [dm^3 to m^3 or US-gal to US-Mgal] Corresponds to the factory setting for the full scale value (→ 125).

Functional description USER INTERFACE → INFORMATION LINE → CONFIGURATION	
FORMAT (2602)	Note! This function is not available unless a number was selected in the function ASSIGN (2600). Use this function to define the maximum number of places after the decimal point displayed for the reading in the additional line. **Options** XXXXX. - XXXX.X - XXX.XX - XX.XXX -X.XXXX **Factory setting** X.XXXX Note! ▪ Note that this setting only affects the reading as it appears on the display, it has no influence on the accuracy of the system's calculations. ▪ The places after the decimal point as computed by the measuring device cannot always be displayed, depending on this setting and the engineering unit. In such instances an arrow appears on the display between the measuring value and the engineering unit (e.g. 1.2→ m3/h), indicating that the measuring system is computing with more decimal places than can be shown on the display.
DISPLAY MODE (2603)	Note! This function is only available if VOLUME FLOW BARGRAPH IN % or SIGNAL BARGRAPH IN % was selected in the function ASSIGN (2600). Use this function to define the format of the bar graph. **Options** STANDARD (Simple bar graph with 25 / 50 / 75% gradations and integrated sign). A0001258 SYMMETRY (Symmetrical bar graph for positive and negative directions of flow, with −50 / 0 / +50% gradations and integrated sign). 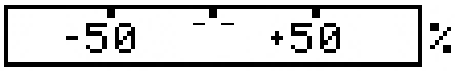 A0001259 **Factory setting** STANDARD

Function group MULTIPLEX

Functional description USER INTERFACE → INFORMATION LINE → MULTIPLEX	
ASSIGN (2620)	Use this function to define a second reading to be displayed in the main line alternately (every 10 seconds) with the reading defined in the function ASSIGN (2600). **Options** OFF VOLUME FLOW (CH1) VOLUME FLOW IN % (CH1) SOUND VELOCITY (CH1) SIGNAL STRENGTH (CH1) FLOW VELOCITY (CH1) VOLUME FLOW BARGRAPH IN % (CH1) SIGNAL BARGRAPH IN % (CH1) ACTUAL CURRENT 1 TOTALIZER (1 to 3) OPERATING/SYSTEM CONDITIONS FLOW DIRECTION ACCUMULATOR CHARGE ACTUAL CURRENT INPUT VOLUME FLOW DEVICE 2 **Factory setting** OFF Note! Multiplex mode is suspended as soon as a fault / notice message is generated. The message in question appears on the display. ▪ Fault message (identified by a lightning icon): – If ON was selected in the function ACKNOWLEDGE FAULTS (8004), multiplex mode is resumed as soon as the fault has been acknowledged and is no longer active. – If OFF was selected in the function ACKNOWLEDGE FAULTS (8004), multiplex mode is resumed as soon as the fault is no longer active. ▪ Notice message (identified by an exclamation mark): – Multiplex mode is resumed as soon as the notice message is no longer active. If a channel is not visible, it does not appear in the options. Channels can be displayed or hidden by means of the function MEASUREMENT (6880).
100% VALUE (2621)	Note! This function is not available unless VOLUME FLOW IN % was selected in the ASSIGN function (2620). ▪ VOLUME FLOW IN % (CH1) ▪ VOLUME FLOW BARGRAPH IN % (CH1) ▪ SIGNAL BARGRAPH IN % (CH1) Use this function to define the flow value to be shown on the display as the 100% value. **User input** 5-digit floating-point number **Factory setting** Depends on nominal diameter and country, [value] / [dm^3 to m^3 or US-gal to US-Mgal] Corresponds to the factory setting for the full scale value (→ 📄 125).

Functional description USER INTERFACE → INFORMATION LINE → MULTIPLEX	
FORMAT (2622)	Note! This function is not available unless a number was selected in the function ASSIGN (2620). Use this function to define the maximum number of places after the decimal point displayed for the reading in the main line. **Options** XXXXX. - XXXX.X - XXX.XX - XX.XXX -X.XXXX **Factory setting** X.XXXX Note! ▪ Note that this setting only affects the reading as it appears on the display, it has no influence on the accuracy of the system's calculations. ▪ The places after the decimal point as computed by the measuring device cannot always be displayed, depending on this setting and the engineering unit. In such instances an arrow appears on the display between the measuring value and the engineering unit (e.g. 1.2→ m3/h), indicating that the measuring system is computing with more decimal places than can be shown on the display.
DISPLAY MODE (2623)	Note! This function is only available if VOLUME FLOW BARGRAPH IN % or SIGNAL BARGRAPH IN % was selected in the function ASSIGN (2620). Use this function to define the format of the bar graph. **Options** STANDARD (Simple bar graph with 25 / 50 / 75% gradations and integrated sign). A0001258 SYMMETRY (Symmetrical bar graph for positive and negative directions of flow, with −50 / 0 / +50% gradations and integrated sign). A0001259 **Factory setting** STANDARD

11.6 Block TOTALIZER

11.6.1 Group TOTALIZER (1 to 3)

Function group CONFIGURATION

Functional description TOTALIZER → TOTALIZER → CONFIGURATION	
ASSIGN (3000)	Use this function to assign a measured variable to the totalizer in question. **Options** OFF VOLUME FLOW (CH1) **Factory setting** VOLUME FLOW (CH1) Note! ▪ The totalizer is reset to 0 as soon as the selection is changed. ▪ If you select OFF in the function group CONFIGURATION of the totalizer in question, only the ASSIGN (3000) function remains visible.
UNIT TOTALIZER (3001)	Use this function to define the unit for the totalizer's measured variable, as selected beforehand. **Options** Metric: cm3; dm3; m3; ml; l; hl; Ml US: cc; af; ft3; oz f; gal; Mgal; bbl (normal fluids); bbl (beer); bbl (petrochemicals); bbl (filling tanks) Imperial: gal; Mgal; bbl (beer); bbl (petrochemicals) Arbitrary unit (from ARBITRARY UNIT function group → 76): – – – – **Factory setting** m^3
TOTALIZER MODE (3002)	Use this function to define how the flow components are to be totaled by the totalizer in question. **Options** BALANCE Positive and negative flow components. The positive and negative flow components are balanced. In other words, net flow in the flow direction is registered. FORWARD Positive flow components only REVERSE Negative flow components only **Factory setting** Totalizer 1 = BALANCE Totalizer 2 = FORWARD Totalizer 3 = REVERSE
RESET TOTALIZER (3003)	Use this function to reset the sum and the overflow of the totalizer in question to zero. **Options** NO YES **Factory setting** NO

Function group OPERATION

Functional description TOTALIZER → TOTALIZER → OPERATION	
SUM (3040)	Use this function to view the total for the particular totalizer's measured variable aggregated since measuring commenced. The value can be positive or negative, depending on the setting selected in the "TOTALIZER MODE" function (3002), and the direction of flow. **User interface** max. 7-digit floating-point number, including sign and unit (e.g. 15467.04 m3) Note! Multiplex mode is suspended as soon as a fault / notice message is generated. The message in question appears on the display. ▪ The effect of the setting in the "TOTALIZER MODE" function (→ 📄 91) is as follows: – If the setting is "BALANCE", the totalizer balances flow in the positive and negative directions. – If the setting is "POSITIVE", the totalizer registers only flow in the positive direction. – If the setting is "NEGATIVE", the totalizer registers only flow in the negative direction. ▪ The totalizer's response to faults is defined in the "FAILSAFE ALL TOTALIZERS" function (3801) (→ 📄 91).
OVERFLOW (3041)	Use this function to view the totaled overflow for the particular totalizer aggregated since measuring commenced. Total flow quantity is represented by a floating-point number consisting of max. 7 digits. You can use this function to view higher numerical values (>9,999,999) as overflows. The effective quantity is thus the total of OVERFLOW plus the value returned by the SUM function. **Example** Reading for 2 overflows: 2 10^7 dm^3 (= 20,000,000 dm^3) The value displayed in the function SUM = 196,845.7 dm^3 Effective total quantity = 20,196,845.7 dm^3 **User interface** Integer with exponent, including sign and unit, e.g. 2 107 dm3

11.6.2 Group HANDLING TOTALIZER

Functional description TOTALIZER → HANDLING TOTALIZER	
RESET ALL TOTALIZERS (3800)	Use this function to reset the totals (including all overflows) of the totalizers (1 to 3) to "zero" (= RESET). **Options** NO YES **Factory setting** NO

Functional description TOTALIZER → HANDLING TOTALIZER	
FAILSAFE ALL TOTALIZERS (3801)	Use this function to define the common response of all totalizers (1 to 3) in case of error. **Options** STOP The totalizers stop if a fault is present. ACTUAL VALUE The totalizer continues to count based on the current flow measuring value. The fault is ignored. HOLD VALUE The totalizer continues to count the flow is based on the last valid flow value (before the fault occurred). **Factory setting** STOP

11.7 Block OUTPUTS

11.7.1 Group CURRENT OUTPUT

Function group CONFIGURATION

Functional description OUTPUTS E → CURRENT OUTPUT 1 EAA → CONFIGURATION 400	
ASSIGN CURRENT OUTPUT (4000)	Use this function to define a second reading to be displayed in the main line alternately (every 10 seconds) with the reading defined in the function ASSIGN (2600). **Options** OFF VOLUME FLOW CH 1 SOUND VELOCITY CH 1 SIGNAL STRENGTH CH 1 FLOW VELOCITY CH 1 **Factory setting** VOLUME FLOW CH 1 Note! If you select OFF, the only function shown in the function group CONFIGURATION (400) is this function, in other words, ASSIGN CURRENT OUTPUT (4000).

Functional description OUTPUTS E → CURRENT OUTPUT 1 EAA → CONFIGURATION 400	
CURRENT SPAN (4001)	Use this function to define the current span. The selection specifies the operational range and the lower and upper signal on alarm. **Options** 0–20 mA 4–20 mA 4–20 mA NAMUR 4–20 mA US 0–20 mA (25 mA) 4–20 mA (25 mA) **Factory setting** 4–20 mA NAMUR Current span, operational range and signal on alarm level

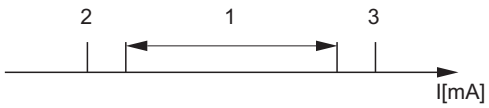

a	1	2	3
0-20 mA	0 - 20.5 mA	0	22
4-20 mA	4 - 20.5 mA	2	22
4-20 mA NAMUR	3.8 - 20.5 mA	3.5	22.6
4-20 mA US	3.9 - 20.8 mA	3.75	22.6
0-20 mA (25 mA)	0 - 24 mA	0	25
4-20 mA (25 mA)	4 - 24 mA	2	25

A0001222

A = Current span
1 = Operational range (measuring information)
2 = Lower signal on alarm level
3 = Upper signal on alarm level

Note!
- If the measured value exceeds the measuring range (as defined in the functions VALUE 0_4 mA (4002) and VALUE 20 mA (4003)) a notice message is generated (#351–354, current span).
- In case of a fault the behaviour of the current output is according to the selected option in the function FAILSAFE MODE (4006.) Change the error category in the function ASSIGN SYSTEM ERROR (8000) to generate a fault message instead of a notice message.

Functional description OUTPUTS E → CURRENT OUTPUT 1 EAA → CONFIGURATION 400	
VALUE 0_4 mA (4002)	Use this function to assign the 0/4 mA current a value. The value can be greater or less than the value assigned to 20 mA (function VALUE 20 mA (4003)). Positive and egative values are permissible, depending on the measured variable in question (e.g. CH1 volume flow). Example: 4 mA assigned value = – 250 l/h 20 mA assigned value = +750 l/h Calculated current value = 8 mA (at zero flow) Note! Values with different signs cannot be entered for 0/4 mA and 20 mA (function 4003) if SYMMETRY is the setting selected for the MEASURING MODE function (4004). In this case the message "INPUT RANGE EXCEEDED" appears on the display. Example for STANDARD measuring mode: 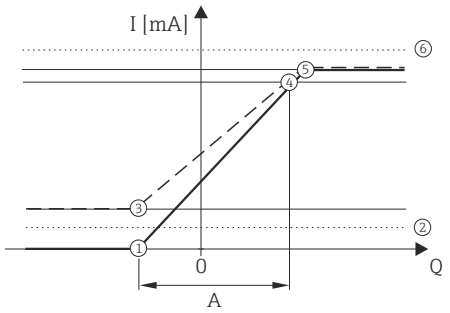 ① = Initial value (0...20 mA) ② = Lower signal on alarm level:: depends on the setting in the function CURRENT SPAN ③ = Initial value (4...20 mA): depends on the setting in the function CURRENT SPAN ④ = Full scale value (0/4...20 mA): depends on the setting in the function CURRENT SPAN ⑤ = Maximum current value: depends on the setting in the function CURRENT SPAN ⑥ = mode (upper signal on alarm level): depends on the setting in the functions CURRENT SPAN → 107 and FAILSAFE MODE, → 122 A = Measuring range (the minimum measuring range has to exceed the value that correlates with a flow velocity of 0.3 m/s). **User input:** 5-digit floating-point number, with sign **Factory setting:** 0 [unit] Note! ▪ ▪ The appropriate unit is taken from the function UNIT VOLUME FLOW (0402) → 74. ▪ For details on current span, operational range and signal on alarm level → 107. Caution! The current output responds differently, depending on the parameters set in the various functions. Some examples of parameter settings and their effect on the current output are given in the following section.

Functional description OUTPUTS E → CURRENT OUTPUT 1 EAA → CONFIGURATION 400	
VALUE 20 mA (4003)	**Parameter setting example A:** 1. VALUE 0_4 mA (4002) = not equal to zero flow (e.g. -5 m^3/h) VALUE 20 mA (4003) = not equal to zero flow (e.g. 10 m^3/h) or 2. VALUE 0_4 mA (4002) = not equal to zero flow (e.g. 100 m^3/h) VALUE 20 mA (4003) = not equal to zero flow (e.g. -40 m^3/h) and MEASURING MODE (4004) = STANDARD When you enter the values for 0/4 mA and 20 mA, the working range of the measuring device is defined. If the effective flow drops below or exceeds this working range (see ①), a fault/notice message is generated (#351-354, current range) and the current output responds in accordance with the parameter settings in the function FAILSAFE MODE (4006). A0001262 **Parameter setting example B:** 1. VALUE 0_4 mA (4002) = equal to zero flow (e.g. 0 m3/h) VALUE 20 mA (4003) = not equal to zero flow (e.g. 10 m3/h) or 2. VALUE 0_4 mA (4002) = not equal to zero flow (e.g. 100 m3/h) VALUE 20 mA (4003) = equal to zero flow (e.g. 0 m3/h) and MEASURING MODE (4004) = STANDARD When you enter the values for 0/4 mA and 20 mA, the working range of the measuring device is defined. In doing so, one of the two values is parameterised as zero flow (e.g. 0 m3/h). If the effective flow drops below or exceeds the value parameterised as the zero flow, no fault/notice message is generated and the current output retains its value. If the effective flow drops below or exceeds the other value, a fault/notice message is generated (#351-354, current range) and the current output responds in accordance with the parameter settings in the function FAILSAFE MODE (4006). A0001264 Deliberately only one flow direction is output with this setting and flow values in the other flow direction are suppressed. **Parameter setting example C:** MEASURING MODE (4004) = SYMMETRY The current output signal is independent of the direction of flow (absolute amount of the measured variable). The 0_4 mA value ① and the 20 mA value ② must have the same sign (+ or -). The "20 mA VALUE" ③ (e.g. backflow) corresponds to the mirrored 20 mA VALUE ② (e.g. flow). 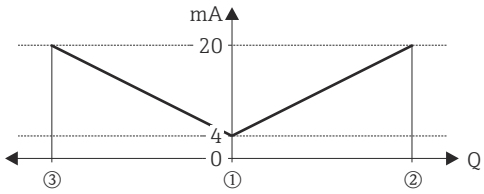 A0001249 ASSIGN RELAY (4700) = FLOW DIRECTION With this setting e.g. the flow direction output via a switching contact can be made.

Function group OPERATION

Functional description TOTALIZER → TOTALIZER → OPERATION	
VALUE 20 mA (4003)	Use this function to assign the 20 mA current a value. The value can be greater or less than the value assigned to 0/4 mA, (function VALUE 0_4 mA (4002)). Positive and negative values are permissible, depending on the measured variable in question (e.g.). The assignment applies for both flow directions for measuring mode SYMMETRY (→ 98) and only for the selected flow direction for measuring mode STANDARD. Example: 4 mA assigned value = − 250 l/h 20 mA assigned value = +750 l/h Calculated current value = 8 mA (at zero flow) Note! Values with different signs cannot be entered for 0/4 mA (function 4002) and 20 mA if SYMMETRY is the setting selected in the function MEASURING MODE (4004). In this case the message "INPUT AREA EXCEEDED" appears. **User input:** 5-digit floating-point number, with sign **Factory setting** depends on the setting in the function ASSIGN CURRENT OUTPUT (4000): volume flow: 20 l/s sound velocity: 1800 m/s flow velocity: 10 m/s corresponds to the factory setting for the final value. Note! ▪ The appropriate unit is taken from the function UNIT VOLUME FLOW (0402) → 74. ▪ For an example for STANDARD measuring mode → 95. ▪ If a channel is not visible, it does not appear in the options. Channels can be displayed or hidden by means of the function MEASUREMENT (6880). Caution! It is very important to read and comply with the information in the function VALUE 0_4 mA (under "Caution"; Examples of parameterization) on → 107.

Functional description TOTALIZER → TOTALIZER → OPERATION	
MEASURING MODE (4004)	Use this function to define the measuring mode for the current output. **Options:** STANDARD SYMMETRY The current output signal is proportional to the measured variable. The flow components outside the scaled measuring range (defined by the 0_4 mA VALUE ① and the 20 mA VALUE ②) are taken into account as follows for signal output: ▪ If one of the values is defined as equal to the zero flow (e.g. VALUE 0_4 mA = 0 m^3/h), no message is given if this value is exceeded or not achieved and the current output retains its value (4 mA in the example). If the other value is exceeded or not achieved, the message "CURRENT OUTPUT AT FULL SCALE VALUE" appears and the current output responds in accordance with the parameter setting in the function FAILSAFE MODE (4006). ▪ If both values are defined as not equal to the zero flow (e.g. VALUE 0_4 mA = −5 m^3/h, VALUE 20 mA = 10 m^3/h) the message "CURRENT OUTPUT AT FULL SCALE VALUE" appears if the measuring range is exceeded or not achieved and the current output responds in accordance with the parameter setting in the function FAILSAFE MODE (4006). 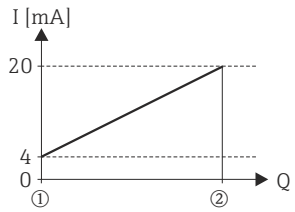 A0001248 SYMMETRY The current output signal is independent of the direction of flow (absolute amount of the measured variable). The 0_4 mA VALUE ① and the 20 mA VALUE ② must have the same sign (+ or −). The "20 mA VALUE" ③ (e.g. backflow) corresponds to the mirrored 20 mA VALUE ② (e.g. flow). 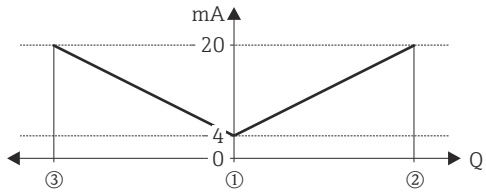 A0001249 Note! ▪ The direction of flow can be output via the configurable relay or status outputs. ▪ SYMMETRY cannot be selected unless the values in the VALUE 0_4 mA (4002) and VALUE 20 mA (4003) functions have the same sign or one of the values is zero. If the signs of the two values differ, SYMMETRY cannot be selected and an "ASSIGNMENT NOT POSSIBLE" message is issued.

Functional description TOTALIZER → TOTALIZER → OPERATION	
Further explanations and information	**How the current output responds under the following postulated conditions:** 1. Defined measuring range (①–②):① and ② have the **same** sign 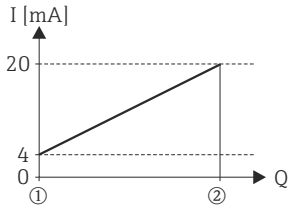 A0001248 and the following flow behaviour: 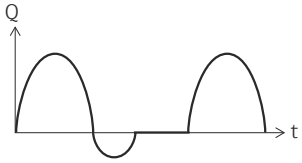 A0001265 ▪ STANDARD The current output signal is proportional to the measured variable. The flow components outside the scaled measuring range are not taken into account for signal output. 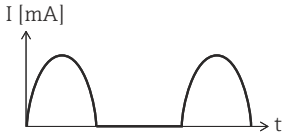 A0001267 ▪ SYMMETRY The current output signal is independent of the direction of flow. 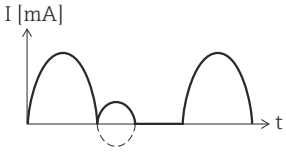 A0001268

Functional description TOTALIZER → TOTALIZER → OPERATION	
Detailed explanations and information	2. Defined measuring range (①–②):① and ② have the same sign 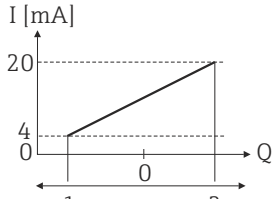 A0001272 3. Flow a (—) outside, b (- -) within the measuring range. 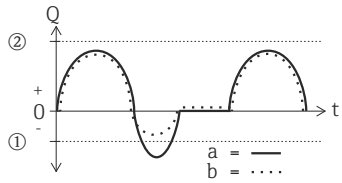 A0001273 ▪ STANDARD a (—): The flow components outside the scaled measuring range cannot be taken into account for signal output. A fault message is generated (# 351…354, current range) and the current output responds in accordance with the parameter settings in the function FAILSAFE MODE (4006). b (- -): The current output signal is proportional to the measured variable assigned. 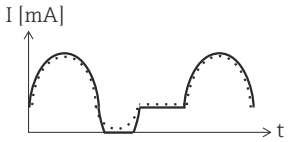 A0001274
TIME CONSTANT (4005)	Use this function to enter a time constant defining how the current output signal reacts to severely fluctuating measured variables, either very quickly (enter a low time constant) or with damping (enter a high time constant). **User input:** fixed-point number 0.01…100.00 s **Factory setting** 1.00 s

Functional description TOTALIZER → TOTALIZER → OPERATION	
FAILSAFE MODE (4006)	For safety reasons it is advisable to ensure that the current output assumes a predefined state in the event of a fault. The setting you select here affects only the current output. It has no effect on other outputs and the display (e.g. totalizers). **Options:** MIN. CURRENT The current output adopts the value of the lower signal on alarm level (as defined in the function CURRENT SPAN (4001) → 📄 94 MAX. CURRENT The current output adopts the value of the upper signal on alarm level (as defined in the function CURRENT SPAN (4001) → 📄 94 HOLD VALUE (not recommended) Measuring value output is based on the last measuring value saved before the error occurred. ACTUAL VALUE Measured value output is based on the current flow measurement. The fault is ignored. **Factory setting** MIN. CURRENT
OUTPUT SIGNAL (4007)	Use this function to configure the current output as "active" or "passive". **Options:** PASSIVE The current loop is powered externally (ie. from the DCS). ACTIVE The current loop is powered from the Prosonic Flow 93T transmitter. Note! When using the current output in "ACTIVE" mode the battery life is reduced by approximately 25%. **Factory setting** PASSIVE
ACTUEL CURRENT (4040)	Use this function to view the computed actual value of the output current. **User interface** 0.00...25.00 mA
SIMULATION CURRENT (4041)	Use this function to activate simulation of the current output . **Options:** OFF ON **Factory setting** OFF Note! ▪ The "SIMULATION CURRENT OUTPUT" message indicates that simulation is active. ▪ The measuring device continues to measure while simulation is in progress, i.e. the current measuring values are output correctly via the other outputs. ☝ Caution! The setting is not saved if the power supply fails.

11.7.2 Function group Operation

Functional description OUTPUTS E→ CURRENT OUTPUT 1 EAA → CONFIGURATION 400	
VALUE SIMULATION CURRENT (4042)	Note! The function is not visible unless the function SIMULATION CURRENT (4041) is active (= ON). Use this function to define a freely selectable value (e.g. 12 mA) to be output at the current output. This value is used to test downstream devices and the measuring device itself. **User input:** Floating-point number: 0.00...25.00 mA **Factory setting** 0.00 mA ☞ Caution! The setting is not saved if the power supply fails.

11.7.3 Function Group SITE MANAGER

Functional description BLOCK OUTPUTS → DATA LOGGER → SITE MANAGER	
ACTUAL SITE (4990)	Use this function to display the name of the "site" currently being used by the instrument (the site stored in the Prosonic Flow 93T's internal memory). This is refered to as the ACTUAL SITE. Note! The "site" defines the most important programmed information found in the group functions SYSTEM UNITS. SENSOR PARAMETERS, PIPE DATA, LIQUID DATA, -and TOTALIZERS only. → 50 Note! The SITE MANAGER function is to be used only when the USB stick is installed as the site data is stored and recalled from the USB memory. This function compares the current programmed information in the instrument's internal memory (ACTUAL SITE) to the user defined sites stored on the USB stick. During this process the instrument will display CHECKING. **Options.** "- - - - - - - " indicates that the ACTUAL SITE is not currently stored on the USB stick or that the USB stick is not installed. If there is a match between the ACTUALL SITE and the user defined site stored on the USB stick the name of this site will appear. **Factory setting** "- - - - - - -" no text
"SITE CHANGE/NEW?" (4991)	Use this function to select a site. **Options.** CANCEL NEW SITE ..... A list of user defined site names currently stored on the USB stick will also be displayed. Select NEW SITE if a new site is wished to be created or select the user defined site if additional actions (i.e. LOAD or DELETE) are to be taken with this stored site.
"NAME CHANGE?" (4992)	Use this function to assign a name to a site that is to be managed. **User Input** Max 8-character text, permitted characters are; A-Z, 0 to 9, +, –, punctuation marks. **Factory setting** SITE 01

Functional description BLOCK OUTPUTS → DATA LOGGER → SITE MANAGER	
SAVE/LOAD/DELETE ? (4993)	Use this function to save a site to the USB stick, load a site from the USB stick or delete a site from the USB stick. Options: CANCEL SAVE SITE LOAD SITE DELETE SITE SAVE SITE stores the current programmed information to the USB stick. Note! Not all programmed information is saved. Only a subset of the total programmed information is saved to a site. → 49 LOAD SITE uploads to the programmed information from the site selected which is stored on the USB stick to the instrument's ACTUAL SITE. DELETE SITE removes the site from the USB stick. Note! It is recommended to delete sites from the USB stick via the Prosonic Flow 93T Site Manager and not via PC or laptops. The name of the stored site is only visible via the Site Manager. **Security Options:** NO YES **Factory setting** NO

Group DATA LOGGER

Functional description OUTPUTS → DATA LOGGER → CONFIGURATION	
LOG NAME (4900)	Use this function to enter a log name for the data records (header) to be recorded. Note! After recording, the tag name is saved in the amplifier of the measuring device. The name should be changed accordingly if the measuring point is changed. **User input** max. 8-character text, permitted characters are: A–Z, 0–9, +,–, punctuation marks **Factory setting** - - - - - - - - (No text)
LOGGING (4901)	Use this function to start or stop logging data to the USB stick. **Options** OFF ON **Factory setting** OFF
SYSTEM DATE/TIME (4902)	Use this function to enter the current date and the current time. **User input** ▪ Day range: 00 to 99 ▪ Month range: 00 to 31 ▪ Year range: 00 to 12 ▪ Meridiem range A or P
LOGGING CYCLE (4903)	Use this function to specify the intervals between the data logging cycles. **User input** Integers, 1 to 99999 s **Factory setting** 10 s
DELETE LOG FILES (4904)	Use this function to clear the entire contents of the USB stick. **Options** NO YES **Security options** NO YES **Factory setting** NO

Functional description OUTPUTS → DATA LOGGER → CONFIGURATION	
LOG DELIMITER (4905)	Use this function to set the delimiter and separator characters to be used in the data record. The settings should match what is used in the local settings of PCs and Laptops. **Factory setting** 12.34; 12.34

Options	Decimal Separator	Field Delimiter
12.34; 12.34	Point (.)	Semi-colon (;)
12.34, 12.34	Point (.)	Comma (,)
12,34; 12,34	Comma (,)	Semi-colon (;)
12,34 <TAB> 12,34	Comma (,)	TAB
12.34 <TAB> 12.34	Point (.)	TAB

A0015571-EN

11.7.4 Function group INFORMATION

Functional description OUTPUTS → DATA LOGGER → INFORMATION	
LOGGING TIME (4981)	Use this function to display the time that has elapsed for logging data onto the USB stick. **User interface** HH:MM:SS **Factory setting** 00:00:00

11.8 Block INPUTS

11.8.1 Group CURRENT INPUT

Function group CONFIGURATION

Functional description INPUTS → CURRENT INPUT → CONFIGURATION	
ASSIGN (5200)	Use this function to assign a process variable to the current input. **Options** VOLUME FLOW DEVICE 2 OFF **Factory setting** OFF
CURRENT SPAN (5201)	Use this function to define the current span. The selection specifies the operational range and the lower and upper signal on alarm. **Options** 0–20 mA 4–20 mA 4–20 mA NAMUR 4–20 mA US 0–20 mA (25 mA) 4–20 mA (25 mA) **Factory setting** 4–20 mA NAMUR **Current range / operational range (measuring information)** 0–20 mA / 0 to 20.5 mA 4–20 mA / 4 to 20.5 mA 4–20 mA NAMUR / 3.8 to 20.5 mA 4–20 mA US / 3.9 to 20.8 mA 0–20 mA (25 mA) / 0 to 24 mA 4–20 mA (25 mA) / 4 to 24 mA
VALUE 0-4 mA (5202)	Use this function to assign the 0/4 mA current a value. **Options** 5-digit floating-point number **Factory setting** 0 m^3/h
VALUE 20 mA (5203)	Use this function to assign the 20 mA current a value. **Options** 5-digit floating-point number **Factory setting** 10 l/s
ERROR VALUE (5204)	Use this function to enter a defined error value for the process variable in question. Note! If the current value is outside the selected range (see CURRENT SPAN function, (5201)), the process variable is set to the "error value" defined here and a corresponding notice message "RANGE CUR. IN (# 363)" is generated. **User input** 5-digit floating-point number **Factory setting** 0 l/s

Function group OPERATION

Functional description INPUTS → CURRENT INPUT → OPERATION	
ACTUAL CURRENT INPUT (5240)	Use this function to display the actual value of the input current. **User interface** 0.0 to 25 mA
SIMULATION CURRENT INPUT (5241)	Use this function to activate simulation of the current input. **Options** OFF ON **Factory setting** OFF Note! ▪ Active simulation is indicated by the notice message "SIM. CURR. INP. 1" (# 661). ▪ The value output for the simulation at the current input is specified in the VALUE SIMULATION CURRENT INPUT function (5242). ▪ The measuring device continues to measure while simulation is in progress, i.e. the current measuring values are output correctly via the other outputs and the display. Caution! The setting is not saved if the power supply fails.
VALUE SIMULATION CURRENT INPUT (5242)	Note! This function is not available unless the SIMULATION CURRENT INPUT function (5241) is switched on. Use this function to define a freely selectable value (e.g. 12 mA) to be simulated at the current input. This value is used to test downstream devices and the measuring device itself. **User input** 0.00 to 25.00 mA **Factory setting** 0.00 mA or 4 mA (depending on the setting in function 5201) Caution! The setting is not saved if the power supply fails.

11.9 Block BASIC FUNCTIONS

11.9.1 Group PROCESS PARAMETER

Function group CONFIGURATION

Functional description BASIC FUNCTION → PROCESS PARAMETER → CONFIGURATION	
ASSIGN LOW FLOW CUT OFF (6401)	Use this function to assign the switch point for low flow cut off rate suppression. **Options** OFF VOLUME FLOW **Factory setting** VOLUME FLOW
ON-VALUE LOW FLOW CUT OFF (6401)	Use this function to assign a value to the switch-on point for low flow cut off. Low flow cut off is active if the value entered is not equal to 0. The sign of the flow value is highlighted on the display to indicate that low flow cut off is active. **User input** 5-digit floating-point number Note! The appropriate unit is taken from the function UNIT VOLUME FLOW (0402) (→ 74). **Factory setting** 0 l/s
OFF-VALUE LOW FLOW CUT OFF (6403)	Use this function to enter the switch-off (b) point for low flow cut off. Enter the switch-off point as a positive hysteresis (H) from the switch-on point (a). **User input** Integer 0 to 100% **Factory setting** 50% 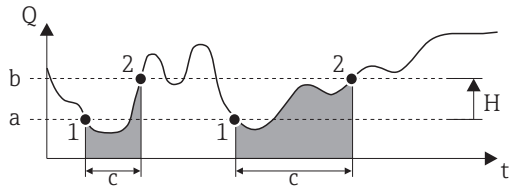 Q = Flow [volume/time] a = ON-VALUE LF CUT OFF (6402) = 200 dm^3/h b = OFF-VALUE LF CUT OFF (6403) = 10% c = Low flow cut off active 1 = Low flow cut off is switched on at 200 dm3/h 2 = Low flow cut off is switched off at 220 dm3/h t = Time

Functional description BASIC FUNCTION → PROCESS PARAMETER → CONFIGURATION	
PRESSURE SHOCK SUPPRESSION (6404)	The closure of a valve can cause brief but severe movements of the fluid in the piping system, movements which the measuring system registers. The pulses totaled in this way result in a totalizer reading error, particularly in the case of batching processes. For this reason, the measuring device is equipped with pressure shock suppression (= short-term signal suppression) which can eliminate system-related "disruptions". Note! Note that pressure shock suppression cannot be used unless the low flow cut off is active, (see function OFF VALUE LOW FLOW CUT OFF → 109). Use this function to define the time span for active pressure shock suppression. Activation of the pressure shock suppression Pressure shock suppression is activated after the flow falls below the switch-on point of the low flow cut off (see point a in graphic). While pressure shock suppression is active, the following conditions apply: ▪ Current output → outputs the current corresponding to zero flow. ▪ Pulse/Freq.-output → outputs the frequency corresponding to zero flow. ▪ Flow reading on display = → 0. ▪ Totalizer reading → the totalizers are pegged at the last correct value. Deactivation of the pressure shock suppression The pressure shock suppression is deactivated after the time interval, set in this function, has passed (see point b in graphic). **Factory setting** l/s Note! The actual flow value is displayed and output when the time interval for the pressure shock suppression has passed and the flow exceeds the switch-off point of the low flow cut off (see point c in graphic). 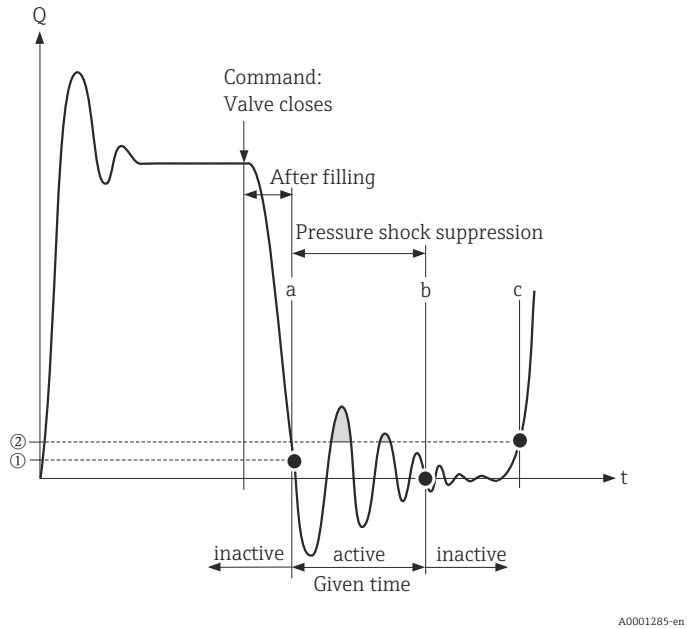 **User input** max. 4-digit number, incl. unit: 0.00 to 100.0 s **Factory setting** l/s

Function group ADJUSTMENT

Functional description BASIC FUNCTION → PROCESS PARAMETER → ADJUSTMENT	
ZERO POINT ADJUSTMENT (6480)	Use this function to start zero point adjustment. Note! For information on how to perform a zero point adjustment, see → 47. **Options** CANCEL START **Factory setting** CANCEL

Function group PIPE DATA

Functional description BASIC FUNCTION → PROCESS PARAMETER → PIPE DATA	
PIPE STANDARD (6520)	Use this function to select a pipe standard. **Options** OTHERS DIN: PN10, PN16, 28610, 28614, 28615, 28619 ANSI: SS SCH40S, SS SCH80S, SS SCH5S, SS SCH10S CS SCH20, CS SCH40, CS SCH80, CS SCH120, AWWA: CLASS 50, CLASS 53, CLASS 55 Note! The selection specifies the values for the following functions: ▪ PIPE MATERIAL(6522) ▪ SOUND VELOCITY PIPE(6524) ▪ LINER MATERIAL(6528) If you edit these functions the pipe standard will be reset to the option OTHERS. **Factory setting** DIN PN10
NOMINAL DIAMETER (6521)	Note! This function does not appear if the option OTHERS was selected in the function PIPE STANDARD (6520). Use this function to select the nominal diameter of the pipe. **Options** OTHERS DN: 25/1", 40/1½", 50/2", 80/3", 100/4", 150/6", 200/8", 250/10", 300/12", 400/16", 450/18", 500/20", 600/24", 700/28", 750/30", 800/32", 900/36", 1000/40", 1200/48", 1400/54", 1500/60", 1600/64", 1800/72", 2000/80" Note! The selection specifies the values for the following functions: ▪ CIRCUMFERENCE(6525) ▪ PIPE DIAMETER(6526) ▪ WALL THICKNESS(6527) If you edit these functions the pipe standard will be reset to the option OTHERS and the function NOMINAL DIAMETER (6521) does not appear. **Factory setting** 80/3"

Functional description BASIC FUNCTION → PROCESS PARAMETER → PIPE DATA	
PIPE MATERIAL (6522)	This function displays the pipe material determined via the value entered in the function PIPE STANDARD (6520). If you edit the predetermined value the pipe standard will be reset to the option OTHERS and the function NOMINAL DIAMETER (6521) does not appear. If a pipe standard was not available for selection and the selection OTHER was made in the function PIPE STANDARD (6520) the pipe material must be entered here. **Options** CARBON STEEL, DUCTILE IRON, STAINLESS STEEL, SS ANSI 304, SS ANSI 316, SS ANSI 347, SS ANSI 410, SS ANSI 430, ALLOY C, PVC, PE, LDPE, HDPE, GRP, PVDF, PA, PP, PTFE, GLASS PYREX, ASBESTOS CEMENT, COPPER, OTHER **Factory setting** STAINLESS STEEL
REFERENCE VALUE (6523)	Use this function to enter the thickness of the reference component (e.g. flange) as the basis for measuring the sound velocity of the pipe. Note! This function does not appear unless the option SOUND VELOCITY PIPE was selected in the function MEASUREMENT (6880, → 118). **User input** 5-digit floating-point number, [unit] **Factory setting** 5 mm
SOUND VELOCITY PIPE (6524)	This function displays the sound velocity in the pipe determined via the value entered in the function PIPE STANDARD (6520). If you edit the predetermined value the pipe standard will be reset to the option OTHERS and the function NOMINAL DIAMETER (6521) does not appear. If a pipe standard was not available for selection and the selection OTHER was made in the function PIPE STANDARD (6520) the sound velocity must be entered here. **Measuring the sound velocity in the pipe** If the sound velocity in the pipe is unknown, it can be measured. To do so, select the option SOUND VELOCITY PIPE in the function MEASUREMENT (6880, → 118). The sound velocity in the pipe is measured by calling up the function SOUND VELOCITY PIPE (6524). The measured sound velocity, the signal strength and a bar graph appear on the local display. The measurement is valid if 100% is achieved in the bar graph. If you confirm the function with the E key, the SAVE prompt appears. To accept the measured sound velocity, select the option YES by means of the + or − key. Note! ▪ To measure the sound velocity, you require the ultrasonic sensors "DDU20" which you can order as an accessory from Endress+Hauser. ▪ A reference value is used as a basis for measuring the sound velocity. This reference value can be edited (see REFERENCE VALUE function, 6523). **User input** Fixed-point number 800 to 6500 m/s **Factory setting** 3120 m/s

Functional description BASIC FUNCTION → PROCESS PARAMETER → PIPE DATA	
CIRCUMFERENCE (6525)	This function displays the outer circumference of the pipe determined via the value entered in the function NOMINAL DIAMETER (6521). If you edit the predetermined value the pipe standard will be reset to the option OTHERS and the function NOMINAL DIAMETER (6521) does not appear. If a nominal diameter was not available for selection and the selection OTHER was made in the function NOMINAL DIAMETER (6521) the outer circumference must be entered here. **User input** Fixed-point number 31.4 to 15708.0 mm **Factory setting** 279.3 mm
PIPE DIAMETER (6526)	This function displays the outer diameter of the pipe determined via the value entered in the function NOMINAL DIAMETER (6521). If you edit the predetermined value the pipe standard will be reset to the option OTHERS and the function NOMINAL DIAMETER (6521) does not appear. If a nominal diameter was not available for selection and the selection OTHER was made in the function NOMINAL DIAMETER (6521) the outer diameter must be entered here. **User input** Fixed-point number 10.0 to 5000.0 mm **Factory setting** 88.9 mm
WALL THICKNESS (6527)	This function displays the thickness of the pipe walls determined via the value entered in the function NOMINAL DIAMETER (6521). If you edit the predetermined value the pipe standard will be reset to the option OTHERS and the function NOMINAL DIAMETER (6521) does not appear. If a nominal diameter was not available for selection and the selection OTHER was made in the function NOMINAL DIAMETER (6521) the thickness of the pipe wall must be entered here. **Measuring the wall thickness** If the wall thickness is unknown, it can be measured. To do so, select the option WALL THICKNESS in the function MEASUREMENT (6880, → 118). The wall thickness is measured by calling up the function WALL THICKNESS (6527). The measured wall thickness, the signal strength and a bar graph appear on the local display. The measurement is valid if 100% is achieved in the bar graph. If you confirm the function with the E key, the SAVE prompt appears. To accept the measured wall thickness, select the option YES by means of the + or − key. Note! To measure the wall thickness, you require the ultrasonic sensors "DDU20" which you can order as an accessory from Endress+Hauser. **User input** Fixed-point number 0.1 to 100.0 mm **Factory setting** 3.2 mm

Functional description BASIC FUNCTION → PROCESS PARAMETER → PIPE DATA	
LINER MATERIAL (6528)	This function displays the liner material of the pipe determined via the value entered in the function PIPE STANDARD (6520). If you edit the predetermined value the pipe standard will be reset to the option OTHERS and the function NOMINAL DIAMETER (6521) does not appear. If a pipe standard was not available for selection and the selection OTHERS was made in the function PIPE STANDARD (6520) the liner material must be specified here. **Options** LINER NONE MORTAR TAR EPOXY OTHERS **Factory setting** LINER NONE
SOUND VELOCITY LINER (6529)	Note! This function does not appear if the option LINER NONE was selected in the function LINER MATERIAL (6528). This function displays the sound velocity of the liner determined via the value entered in the function LINER MATERIAL (6528). If you edit the predetermined value the liner material will be reset to the option OTHERS. If a liner material was not available for selection and the selection OTHER was made in the function LINER MATERIAL (6528) the sound velocity of the liner must be entered here. **User input** Fixed-point number 800 to 6500 m/s **Factory setting** Depending on the selection in the function LINER MATERIAL (6528)
LINER THICKNESS (6528)	Note! This function does not appear if the option LINER NONE was selected in the function LINER MATERIAL (6528). Use this function to enter the thickness of the liner. **User input** Fixed-point number 0.1 to 100.0 mm **Factory setting** 0 mm

Function group LIQUID DATA

Functional description BASIC FUNCTIONS → PROCESS PARAMETER → LIQUID DATA	
LIQUID (6540)	Use this function to select the liquid in the pipe. **Options** WATER, SEA WATER, DISTILLED WATER, AMMONIA, ALCOHOL, BENZENE, BROMIDE, ETHANOL, GLYCOL, KEROSENE, MILK, METHANOL, TOLUOL, LUBRICATING OIL, FUEL OIL, PETROL, OTHER Note! The selection specifies the values for the sound velocity and viscosity. If OTHER is selected, these must be entered via the SOUND VELOCITY LIQUID (6542) and VISCOSITY (6543) functions. **Factory setting** Water

Functional description BASIC FUNCTIONS → PROCESS PARAMETER → LIQUID DATA	
TEMPERATURE (6541)	Use this function to enter the process temperature of the liquid. Via the sound velocity, the value influences the determination of the sensor distance. Enter the process temperature at normal operating conditions to achieve an optimum configuration of the measuring system. **User input** Fixed-point number −273.15 to 726.85 °C (0 to 1000 K) **Factory setting** 20 °C
SOUND VELOCITY LIQUID (6542)	This function displays the sound velocity of the liquid. This is determined by the values entered in the LIQUID (6540) and TEMPERATURE (6541) functions. If you edit the predetermined value the function LIQUID (6540) will be set to the option OTHERS. The sound velocity of the liquid has to be entered if the liquid is not available for selection in the function LIQUID (6540) and the OTHERS option was selected. **Measuring the sound velocity of the liquid** If the sound velocity of the liquid is unknown, it can be measured. To do so, select the option SOUND VELOCITY LIQUID in the function MEASUREMENT (6880, → 118). The sound velocity in the liquid is measured by calling up the function SOUND VELOCITY LIQUID (6542). The result of the measurement appears on the local display. If you confirm the function with the E key, the SAVE prompt appears. To accept the measured sound velocity, select the option YES by means of the + or − key. Note! To measure the sound velocity, you require the ultrasonic sensors "DDU18" which you can order as an accessory from Endress+Hauser. Transmitter search range: The measuring device searches for the measuring signal within a defined sound velocity range. You specify the search range in the SOUND VELOCITY NEGATIVE (6545) and SOUND VELOCITY POSITIVE (6546) functions. An error message is displayed if the sound velocity of the liquid exceeds the search range. Note! We recommend you select a smaller search range in the event of unfavorable signal conditions (signal strength < 50%). 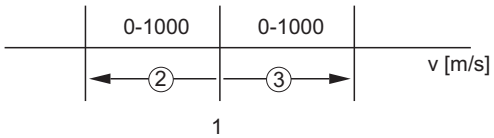 A0001246 1. Sound velocity of the liquid 2. Lower search range: is specified in the SOUND VELOCITY NEGATIVE (6545) function 3. Upper search range: is specified in the SOUND VELOCITY POSITIVE (6546) function **User input** Fixed-point number 400 to 3000 m/s **Factory setting** 1485 m/s

Functional description BASIC FUNCTIONS → PROCESS PARAMETER → LIQUID DATA	
VISCOSITY (6543)	This function displays the viscosity of the liquid. This is determined via the values entered in the LIQUID (6540) and TEMPERATURE (6541) functions. If you edit the predetermined value the function LIQUID (6540) will be set to the option OTHERS. The viscosity has to be entered if the liquid is not available for selection in the function LIQUID (6540) and the OTHERS option was selected. **User input** Fixed-point number 0.0 to 5000.0 mm2/s **Factory setting** l mm^2/s
SOUND VELOCITY NEGATIVE (6545)	Use this function to specify the lower search range for the sound velocity of the liquid. **User input** Fixed-point number 0 to 1000 m/s **Factory setting** 500 m/s Note! Please refer to the explanations in the function SOUND VELOCITY LIQUID (6542).
SOUND VELOCITY POSITIVE (6546)	Use this function to specify the upper search range for the sound velocity of the liquid. **User input** Fixed-point number 0 to 1000 m/s **Factory setting** 300 m/s Note! Please refer to the explanations in the function SOUND VELOCITY LIQUID (6542).

11.9.2 Group SYSTEM PARAMETER

Function group CONFIGURATION

Functional description BASIC FUNCTION → SYSTEM PARAMETER → CONFIGURATION	
INSTALLATION DIRECTION SENSOR (6600)	Use this function to reverse the sign of the flow quantity, if necessary. **Options** NORMAL INVERSE **Factory setting** NORMAL
FLOW DAMPING (6603)	The system damping acts on all functions and outputs of the measuring device. Use this function to set the filter depth of the digital filter. This reduces the sensitivity of the measuring signal to interference peaks (e.g. high solids content, gas bubbles in the fluid, etc.). The system reaction time increases with the filter setting. **User input** 0 to 100 s **Factory setting** 0 s
POSITIVE ZERO RETURN (6605)	Use this function to interrupt evaluation of measured variables. This is necessary when a piping system is being cleaned, for example. This setting acts on all function and outputs of the measuring device. **Options** OFF ON → Signal output is set to the "ZERO FLOW" value. **Factory setting** OFF

11.9.3 Group SENSOR DATA

Function group SENSOR PARAMETER

Functional description BASIC FUNCTION → SENSOR DATA → SENSOR PARAMETER	
MEASUREMENT (6880)	Use this function to select the measuring method or the type of mounting. **Options** OFF CLAMP ON INSERTION (is not supported by the measuring device) SOUND VELOCITY LIQUID SOUND VELOCITY PIPE WALL THICKNESS **Factory setting** CLAMP ON
SENSOR TYPE (6681)	Note! This function is only available if the OFF setting was not selected in the function MEASUREMENT. Use this function to select the sensor type. **Options** W-CL-05F-L-B[1)] W-CL-1F-L-B[1)] W-CL-2F-L-B[1)] W-CL-6F-L-C[1)] P-CL-05F-L-B[1)] P-CL-1F-L-B[1)] P-CL-2F-L-B1) P-CL-6F-M-C[1)] P-CL-6F-L-C[1)] U-CL-2F-L-A[1)] P-CL-6F-L-D[1)] P-CL-6F-M-D[1)] P-CL-05F-M-B[1)] P-CL-1F-M-B[1)] P-CL-2F-M-B[1)] W-IN-1F-L-B[2)] W-CL-1F-L-C[1)] W-CL-6F-M-C[1)] P-CL-1S-L-B[3)] P-CL-1S-M-B[3)] P-CL-4W-L-B[4)] **Factory setting** W-CL-2F-L-B ▪ [1)] This option is not available unless CLAMP ON was selected in the function MEASUREMENT. ▪ [2)] This option is not available unless INSERTION was selected in the function MEASUREMENT. ▪ [3)] This option is not available unless SOUND VELOCITY LIQUID was selected in the function MEASUREMENT. ▪ [4)] This option is not available unless SOUND VELOCITY PIPE or WALL THICKNESS was selected in the function MEASUREMENT.

Functional description BASIC FUNCTION → SENSOR DATA → SENSOR PARAMETER	
SENSOR CONFIGURATION (6882)	Use this function to select the configuration for the ultrasonic sensors, e.g. the number of traverses (in the Clamp On version). Note! This function is not available unless one of the following options was selected in the function MEASUREMENT (6880): ▪ CLAMP ON ▪ SOUND VELOCITY LIQUID ▪ INSERTION (is not supported by the measuring device) **Options** NO. TRAVERSE: 1 [1] NO. TRAVERSE: 2 [2] SINGLE PATH [3] (is not supported by the measuring device) DUAL PATH [3] (is not supported by the measuring device) **Factory setting** NO. TRAVERSE: 2 ▪ [1] This option is not available unless CLAMP ON or SOUND VELOCITY LIQUID was selected in the function MEASUREMENT. ▪ [2] This option is not available unless CLAMP ON was selected in the function MEASUREMENT. ▪ [3] This option is not available unless INSERTION was selected in the function MEASUREMENT. Note! The setting "NO. TRAVERSE: 2" is required for sensors with a nominal diameter range from DN15 to DN 65.
CABLE LENGTH (6883)	Use this function to select the length of the sensor cable. **Options** LENGTH 5 m/15 feet LENGTH 10 m/30 feet **Factory setting** LENGTH 5 m/15 feet
POSITION SENSOR (6884)	Use this function to view the position of both sensors on the rail. **User interface** 5-digit number combination
WIRE LENGTH (6885)	The wire length for assembling the sensors at the correct distance apart appears on the display. **User interface** max. 5-digit number, including unit (e.g. 200 mm)
SENSOR DISTANCE (6886)	The distance between sensor 1 and sensor 2 as a length measurement appears on the display. **User interface** max. 5-digit number, including unit (e.g. 200 mm)
ARC LENGTH (6887)	The arc length on the pipe appears on the display. **User interface** max. 5-digit number, including unit (e.g. 200 mm)
PATH LENGTH (6888)	The path length appears on the display. **User interface** max. 5-digit number, including unit (e.g. 200 mm)

Function group CALIBRATION DATA

Functional description BASIC FUNCTIONS → SENSOR DATA → CALIBRATION DATA	
P-FACTOR (6890)	This function displays the p-factor. The p-factor indicates the influence of the velocity distribution of the flow profile inside the pipe; it is dependent on the Reynolds number. The p-factor varies in the range 0.75 to 0.95. If the displayed value ranges between 0.75 and 0.94 the measurement will have a reduced linearity.
ZERO POINT (6891)	Use this function to call up or manually change the zero point correction currently being used. **User input** 5-digit floating-point number, including unit and sign (e.g. +10.0 ns)
CORRECTION FACTOR (6893)	Use this function to enter a correction factor at the client's site. **User input** 5-digit floating-point number **Factory setting** 1.0000 (= no correction)
DEVIATION SENSOR DISTANCE (6894)	Note! This option is not available unless INSERTION was selected in the function MEASUREMENT (6880). (is not supported by the measuring device) Use this function to enter a deviation value for the sensor distance. **User input** 5-digit floating-point number, including unit and sign (e.g. +2.0000 mm) **Factory setting** 0 mm
DEVIATION ARC LENGTH (6895)	Use this function to enter a deviation value for the arc length. Note! This function is not available unless INSERTION was set in the function MEASUREMENT (6880) and the DUAL PATH option was selected in the function SENSOR CONFIGURATION (6882). **User input** 5-digit floating-point number, including unit and sign (e.g. +2.0000 mm) **Factory setting** 0 mm
DEVIATION PATH LENGTH (6896)	Note! This option is not available unless INSERTION was selected in the function MEASUREMENT (6880). (is not supported by the measuring device) Use this function to enter a deviation value for the path length. **User input** 5-digit floating-point number, including unit and sign (e.g. +2.0000 mm) **Factory setting** 0 mm

11.10 Block SUPERVISION

11.10.1 Group SYSTEM

Function group CONFIGURATION

Functional description SUPERVISION → SYSTEM → CONFIGURATION	
ASSIGN SYSTEM ERROR (8000)	Use this function to view all system errors and the associated error categories (fault message or notice message). If you select a single system error you can change its error category. **User interface** CANCEL List of system errors with an icon preceding each entry. Note! ▪ Press the E key twice to call up the function ERROR CATEGORY (8001). ▪ Use the ⊞ key combination or select "CANCEL" in the system error list to exit the function. ▪ A list of possible system errors is provided on → 54.
ERROR CATEGORY (8001)	Use this function to define whether a system error triggers a notice message or a fault message. If you select "FAULT MESSAGES", all outputs respond to an error in accordance with their defined error response patterns. **Options** NOTICE MESSAGES (display only) FAULT MESSAGES (outputs and display) Note! Press the E key twice to call up the function ASSIGN SYSTEM ERROR (8000).
ASSIGN PROCESS ERROR (8002)	Use this function to view all process errors and the associated error categories (fault message or notice message). If you select a single process error you can change its error category. **User interface** CANCEL List of process errors with an icon preceding each entry. Note! ▪ Press the E key twice to call up the function ERROR CATEGORY (8003). ▪ Use the ⊞ key combination or select "CANCEL" in the system error list to exit the function. ▪ A list of possible process errors is provided on → 57.
ERROR CATEGORY (8003)	Use this function to define whether a process error triggers a notice message or a fault message. If you select "FAULT MESSAGES", all outputs respond to an error in accordance with their defined error response patterns. **Options** NOTICE MESSAGES (display only) FAULT MESSAGES (outputs and display) Note! Press the E key twice to call up the function ASSIGN PROCESS ERROR (8002).

Functional description SUPERVISION → SYSTEM → CONFIGURATION	
ACKNOWLEDGE FAULT (8004)	Use this function to define the measuring device's response to fault messages. **Options** OFF The measuring device resumes normal operation when the fault is rectified. The fault message disappears automatically. ON The measuring device resumes normal operation when the fault is rectified. The fault message has to be acknowledged by pressing the E key on the local display. **Factory setting** OFF
ALARM DELAY (8005)	Use this function to specify a time period for suppressing the appearance of fault or notice messages. Depending on the setting and the type of error, this suppression acts on: ▪ Display ▪ Relay output ▪ Current output ▪ Frequency output **User input** 0 to 100 s (in steps of one second) **Factory setting** 0 s Caution! If this function is activated, error and notice messages are delayed by the time corresponding to the setting before being forwarded to the higher-order controller (process controller, etc.). It is therefore imperative to check in advance in order to make sure whether a delay of this nature could affect the safety requirements of the process. If error and notice messages cannot be suppressed, a value of 0 seconds must be entered here.

Function group OPERATION

Functional description SUPERVISION → SYSTEM → OPERATION	
ACTUAL SYSTEM CONDITION (8040)	Use this function to check the present system condition. **User interface** "SYSTEM OK" or the fault / notice message with the highest priority.
PREVIOUS SYSTEM CONDITIONS (8041)	Use this function to view the fifteen most recent error and notice messages since measuring last started. **User interface** The last 15 fault/notice messages appear on the display.
SIMULATION FAILSAFE MODE (8042)	Use this function to set all inputs, outputs and totalizers to their defined failsafe modes, in order to check whether they respond correctly. During this time, the words "SIMULATION FAILSAFE MODE" appear on the display. **Options** ON OFF FAILURE (CH1) **Factory setting** OFF

Functional description SUPERVISION → SYSTEM → OPERATION	
SIMULATION MEASURAND (8043)	Note! This function is available in the SYSTEM group. Use this function to set all inputs, outputs and totalizers to their defined flow-response modes, in order to check whether they respond correctly. During this time, the words "SIMULATION MEASURAND" appear on the display. **Options** OFF VOLUME FLOW (CH1) SOUND VELOCITY (CH1) **Factory setting** OFF Caution! ▪ The measuring device cannot be used for measuring while this simulation is in progress. ▪ The setting is not saved if the power supply fails.
VALUE SIMULATION MEASURAND (8044)	Note! ▪ This function is available in the SYSTEM group. ▪ The function is not visible unless the function SIMULATION MEASURAND (8043) is active. Use this function to specify a selectable value (e.g. 12 m^3/s). This is used to test the associated functions in the device itself and downstream signal loops. **User input** 5-digit floating-point number, [unit] **Factory setting** 0 [unit] Caution! ▪ The setting is not saved if the power supply fails. ▪ The appropriate unit is taken from the function group SYSTEM UNITS (ACA) (→ 74).
SYSTEM RESET (8046)	Use this function to perform a reset of the measuring system. **Options** NO RESTART SYSTEM (restart without interrupting power supply) **Factory setting** NO

11.10.2 Group VERSION INFO

Function group DEVICE

Functional description SUPERVISION → VERSION INFO → DEVICE	
DEVICE SOFTWARE (8100)	Displays the current device software version.

Function group SENSOR

Functional description SUPERVISION → VERSION INFO → SENSOR	
SERIAL NUMBER (8200)	Use this function to view the current serial number of the sensor.

Function group AMPLIFIER

Functional description SUPERVISION → VERSION INFO → AMPLIFIER	
SOFTWARE REVISION NUMBER AMPLIFIER (8222)	Use this function to view the software revision number of the amplifier.
LANGUAGE GROUP (8226)	Use this function to view the language group. Note! ▪ You can change the language group via the operating program "FieldCare". ▪ The following language groups are available: – WEST EU / USA – EAST EU / SCAND. – ASIA – CHINA

Function group I/O MODULE

Functional description SUPERVISION → VERSION INFO → I/O MODULE	
I/O MODULE TYPE (8300)	Use this function to view the configuration of the I/O module.
SOFTWARE REVISION NUMBER I/O MODULE (8303)	Use this function to view the software revision number of the I/O module.

Function group I/O SUBMODULE 1

Functional description SUPERVISION → VERSION INFO → I/O SUBMODULE 1	
SUB I/O TYPE (8320)	Use this function to view the configuration of I/O submodule 1 (current input).
SOFTWARE REVISION NUMBER SUB I/O TYPE (8323)	Use this function to view the software revision number of I/O submodule 1.

Function group I/O SUBMODULE 2

Functional description SUPERVISION → VERSION INFO → I/O SUBMODULE 2	
SUB I/O TYPE (8340)	Use this function to view the configuration of I/O submodule 2 (data logger).
SOFTWARE REVISION NUMBER SUB I/O TYPE (8343)	Use this function to view the software revision number of I/O submodule 2.

12 Factory settings

12.1 SI units (not for USA and Canada)

12.1.1 Units of length and temperature

	Unit
Temperature	° C
Length	mm

12.1.2 Language

Country	Language	Country	Language
Australia	English	Norway	Norsk
Belgium	English	Austria	Deutsch
Denmark	English	Poland	Polski
Germany	Deutsch	Portugal	Portugues
England	English	Sweden	Svenska
Finland	Suomi	Switzerland	Deutsch
France	Francais	Singapore	English
The Netherlands	Nederlands	Spain	Espanol
Hong Kong	English	South Africa	English
India	English	Thailand	English
Italy	Italiano	Czech Republic	Cesky
Luxembourg	Francais	Hungary	English
Malaysia	English	Other countries	English

12.2 US units (for USA and Canada only)

12.2.1 Units of length and temperature

	Unit
Temperature	°F
Length	Inch

12.2.2 Language

	Language
USA	English
Canada	English

Index

A

Access code (2020) 79
Access code counter (2023) 80
Accessories 52
Acknowledge fault (8004) 122
Actual current input (5240) 108
Actual system condition (8040) 122
Additional configuration (function group) 75
Additional line
  100% value (2401) 83
  Assign (2400) 83
  Configuration 83
  Display mode (2403) 84
  Format (2402) 84
Additional line (Multiplex)
  100% value (2421) 85
  Assign (2420) 85
  Display mode (2423) 86
  Format (2422) 86
Adjustment (function group) 111
Alarm delay (8005) 122
Ambient temperature range 64
Amplifier (function group) 124
Applications 4, 60
Applicator (selection and configuration software) 53
Approvals 8, 67
Arbitrary unit
  Function group 76
Arbitrary units (function group) 76
Arc length (6887) 119
Assign (3000) 91, 93
Assign (5200) 107
Assign low flow cut off (6400) 109
Assign process error (8002) 121
Assign system error (8000) 121

B

Backlight (2004) 79
Basic configuration (function group) 78
Basic functions (block) 109
Battery charging 51
Block
  Basic functions 109
  Inputs 107
  Measured variables 73
  Quick Setup 76
  Supervision 121
  Totalizer 91, 93
  User interface 78

C

Cable length (6882) 119
Calibration data (function group) 120
CE mark (Declaration of Conformity) 8
Certificates 8, 67
Circumference (6525) 113
Cleaning 51
Configuration
  Additional line 83
  Current input) 107
  Information line 87
  Main line 81
  Process parameter 109
  Supervision 121
  System parameter 117
  System units 74
  Totalizer) 91
Connecting cable 62
Contrast LCD (2003) 79
Control (group) 78
Correction factor (6893) 120
Coupling fluid 51
C-Tick mark 8
Current output (group) 107
Current span (4001) 94
Current span (5201) 107

D

Data logger 61
Data logger (data exchange) 48
Data logger (group) 102, 105
DDU18 sound velocity sensor 31
DDU20 wall thickness sensor 32
Declaration of Conformity (CE mark) 8
Define private code (2021) 80
Degree of protection 65
Delete log files (4904) 105
Designated use 4
Deviation arc length (6895) 120
Deviation path length (6896) 120
Deviation sensor distance (6894) 120
Device (function group) 123
Device designation 6
Device software (8100) 123
Display 67
Display and operating elements 36
Display damping (2002) 78
Display elements 67
Disposal 59

E

Electrical connection
  Potential equalization 35
Electromagnetic compatibility (EMC) 65
Error category (8001) 121
Error category (8003) 121
Error messages
  Confirming error messages 41
  Process error (application error) 57
Error types (system and process errors) 41
Error value (5204) 107
Exterior cleaning 51

F

Factor arbitrary volume (0603) 76
FAILSAFE 101
Failsafe all totalizers (3801) 93
FAILSAFE MODE (4006) 101
Failsafe mode of inputs/outputs 59
FieldCare 42, 53
Fieldcheck (tester and simulator) 53
Flow damping (6603) 117
Flow velocity CH1 (0003) 73
Format date/time (0429) 75
Function 60
Function check 43
Function group
- Additional configuration 75
- Adjustment 111
- Amplifier 124
- Arbitrary unit 76
- Basic configuration 78
- Calibration data 120
- Configuration 74, 81, 91, 93, 107, 109
- Configuration (information line) 87
- Configuration (supervision) 121
- Configuration (system parameter) 117
- Device 123
- I/O module 124
- I/O submodule 1 124
- I/O submodule 2 124
- Information 103, 106
- Liquid data 114
- Main values CH1 73
- Multiplex 82
- Multiplex (additional line) 85
- Multiplex (information line) 89
- Operation 80, 92, 97, 108, 122
- Pipe data 111
- Sensor 123
- Sensor parameter 118
- Unlocking/locking 79

Function matrix
- Brief guide 39
- Description 69
- Overview 71

FXA193 53
FXA291 53

G

Galvanic isolation 61
Group
- Additional line 83
- Current output 107
- Data logger 102
- Handling totalizer 92
- Information line 87
- Main line 81
- Measuring values 73
- Operation 78
- Process parameter 109
- Sensor data 118
- Special units 76
- System 121
- System parameter 117
- System units 74
- Totalizer 91, 93
- Version info 123

Group Data logger 105
Group TOTALIZER (1..3) 50

H

Handling totalizer (group) 92
Hazardous substances 5
HOME position (display operating mode) 36

I

I/O module (function group) 124
I/O submodule 1 (8320) 124
I/O submodule 2 (8340) 124
I/O_module type (8300) 124
Incoming acceptance 9
Information (function group) 103, 106
Information line
- 100% value (2601) 87
- Assign (2600) 87
- Display mode (2603) 88
- Format (2602) 88

Information line (Multiplex)
- 100% value (2621) 89
- Assign (2620) 89
- Display mode (2623) 90
- Format (2622) 90

Input 60
Input signal 60
Inputs (block) 107
Installation conditions
- Dimensions 9
- Inlet and outlet run 11
- Mounting location 9

Installation direction sensor (6600) 117

L

Language (2000) 78
Language group (8226) 124
Language groups 67
Length of connecting cable 64
Liner material (6528) 114
Liner thickness (6528) 114
Liquid (6540) 114
Liquid data (process parameter group) 114
LOG DELIMITER (4905) 106
Logging (4901) 105
Logging cycle (4903) 105
Logging time (4981) 103–104, 106
Low flow cut off 61

M

Main line
- 100% value (2201) 81
- Assign (2200) 81
- Configuration 81

Format (2202) 81
Main line (Multiplex)
100% value (2221) 82
Assign (2220) 82
Format (2222) 82
Materials 66
Maximum measured error 62
Measured variable 60
Measured variables (block) 73
Measurement (6880) 118
Measuring principle 60
Measuring range 60
Measuring system 6, 60
Measuring unit electrical connection 61
Measuring values (group) 73
Mechanical construction 66
Medium pressure range (nominal pressure) 65
Medium temperature range 65

N

Nameplate
Sensor 7
Transmitter 6
NiMH accumulator
Charging 34
Technical data 62
Nominal diameter (6521) 111

O

Off-value low flow cut off (6403) 109
On-value low flow cut off (6401) 109
Operable flow range 60
Operating conditions
Environment 64
Installation 64
Operating elements 67
Operation
Display and operating elements 36
FieldCare 42
Function matrix 39
Operational safety 4
Order code
Accessories 52
Transmitter 6–7
Ordering information 68
Output signal 61
Overflow (3041) 92

P

Path length (6888) 119
Performance characteristics 62
P-factor (6890) 120
Pipe data (function group) 111
Pipe diameter (6526) 113
Pipe material (6522) 112
Pipe standard (6520) 111
Position sensor (6884) 119
Positive zero return (6605) 117
Post-installation check (checklist) 33
Potential equalization 35, 62
Pressure loss 65
Pressure shock suppression (6404) 110
Previous system conditions (8041) 122
Process error messages 57
Process errors
Definition 41
Process errors without messages 58
Process parameter (group) 109
Programming mode
Disabling 40
Enabling 40

Q

Quick Setup
Commissioning 46
Function QS sensor installation (1001) 76
QS function commissioning (1002) 76
QS function pulsating flow (1003) 77
Sensor installation 44

R

Reference value (6523) 112
Registered trademarks 8
Remote operation 67
Repair 5
Reset all totalizers (3800) 92
Reset totalizer (3003) 91, 96
Returning devices 5

S

Safety icons 5
Safety instructions 4
Sensor 60
Sensor (function group) 123
Sensor configuration (6882) 119
Sensor distance (6886) 119
Sensor parameter
Function group 118
Sensor type (6681) 118
Serial number 6–7
Serial number (8200) 123
Service interface FXA193 53
Serviceinterface FXA291 53
Shock resistance 65
Shut backlight (2005) 79
Signal strength (0007) 73
Simulation
Current input (5241) 108
Failsafe mode (8042) 122
Measurand (8043) 123
Software
Amplifier display 43
Software revision number
Amplifier (8222) 124
I/O module (8303) 124
I/O submodule 1 124
I/O submodule 2 124
Sound velocity
Display (0002) 73
Liquid (6542) 115

Negative (6545) 116
Pipe (6524) 112
Positive (6546) 116
Sound velocity liner (6529) 114
Sound velocity sensor DDU18 31
Special units (group) 76
Standards, guidelines 67
Status access (2022) 80
Storage 9
Storage temperature 64
Sum (3040) 92
Supervision (block) 121
Supply voltage 62
System (group) 121
System date/time (4902) 105
System design 60
System error
Definition 41
System parameter (group) 117
System reset (8046) 123
System units (group) 74

T

Tag name (4900) 105
Technical data 60
Temperature (6541) 115
Temperature ranges
Ambient temperature range 64
Medium temperature 65
Storage temperature 64
Test display (2040) 80
Text arbitrary volume (0602) 76
Totalizer (block) 91, 93
Totalizer (group) 91, 93
Totalizer mode (3002) 91, 95
Transmitter 60
Electrical connection 34, 43
Troubleshooting and remedy 54

U

Unit
Length (0424) 75
Temperature (0422) 75
Velocity (0425) 75
Viscosity (0423) 75
Volume (0403) 74
Volume flow (0402) 74
Unit totalizer (3001) 91
Unlocking/locking (function group) 79
User interface 67

V

Value 0-4 mA (5202) 97, 107
Value 20 mA (5203) 107
Value simulation current input (5242) 108
Value simulation measurand (8044) 123
Version info (group) 123
Vibration resistance 65
Vibrations, shock and vibration resistance 65
Viscosity (6543) 116
Volume flow CH1 (0001) 73
Volume flow device 2 (0011) 73

W

Wall thickness (6527) 113
Wall thickness sensor DDU19 32
Weight 66
Wire length (6885) 119

Z

Zero point (6891) 120
Zero point adjustment 47
Zero point adjustment (6480) 111

Endress+Hauser

People for Process Automation

Declaration of Hazardous Material and De-Contamination

Erklärung zur Kontamination und Reinigung

RA No. ☐☐☐☐☐☐☐☐

Please reference the Return Authorization Number (RA#), obtained from Endress+Hauser, on all paperwork and mark the RA# clearly on the outside of the box. If this procedure is not followed, it may result in the refusal of the package at our facility.

Bitte geben Sie die von E+H mitgeteilte Rücklieferungsnummer (RA#) auf allen Lieferpapieren an und vermerken Sie diese auch außen auf der Verpackung. Nichtbeachtung dieser Anweisung führt zur Ablehnung ihrer Lieferung.

Because of legal regulations and for the safety of our employees and operating equipment, we need the "Declaration of Hazardous Material and De-Contamination", with your signature, before your order can be handled. Please make absolutely sure to attach it to the outside of the packaging.

Aufgrund der gesetzlichen Vorschriften und zum Schutz unserer Mitarbeiter und Betriebseinrichtungen, benötigen wir die unterschriebene "Erklärung zur Kontamination und Reinigung", bevor Ihr Auftrag bearbeitet werden kann. Bringen Sie diese unbedingt außen an der Verpackung an.

Type of instrument / sensor
Geräte-/Sensortyp _____

Serial number
Seriennummer _____

☐ **Used as SIL device in a Safety Instrumented System /** *Einsatz als SIL Gerät in Schutzeinrichtungen*

Process data/ *Prozessdaten*

Temperature / *Temperatur* _____ [°F] _____ [°C]
Pressure / *Druck* _____ [psi] _____ [Pa]
Conductivity / *Leitfähigkeit* _____ [µS/cm]
Viscosity / *Viskosität* _____ [cp] _____ [mm²/s]

Medium and warnings
Warnhinweise zum Medium

	Medium /concentration *Medium /Konzentration*	Identification CAS No.	flammable *entzündlich*	toxic *giftig*	corrosive *ätzend*	harmful/ irritant *gesundheits-schädlich/ reizend*	other * *sonstiges**	harmless *unbedenklich*
Process medium / *Medium im Prozess*								
Medium for process cleaning / *Medium zur Prozessreinigung*								
Returned part cleaned with / *Medium zur Endreinigung*								

* explosive; oxidizing; dangerous for the environment; biological risk; radioactive
* *explosiv; brandfördernd; umweltgefährlich; biogefährlich; radioaktiv*

Please tick should one of the above be applicable, include safety data sheet and, if necessary, special handling instructions.
Zutreffendes ankreuzen; trifft einer der Warnhinweise zu, Sicherheitsdatenblatt und ggf. spezielle Handhabungsvorschriften beilegen.

Description of failure / *Fehlerbeschreibung* _____

Company data / *Angaben zum Absender*

Company / *Firma* _____

Address / *Adresse* _____

Phone number of contact person / *Telefon-Nr. Ansprechpartner:* _____

Fax / E-Mail _____

Your order No. / *Ihre Auftragsnr.* _____

"We hereby certify that this declaration is filled out truthfully and completely to the best of our knowledge.We further certify that the returned parts have been carefully cleaned. To the best of our knowledge they are free of any residues in dangerous quantities."

"Wir bestätigen, die vorliegende Erklärung nach unserem besten Wissen wahrheitsgetreu und vollständig ausgefüllt zu haben. Wir bestätigen weiter, dass die zurückgesandten Teile sorgfältig gereinigt wurden und nach unserem besten Wissen frei von Rückständen in gefahrbringender Menge sind."

(place, date / *Ort, Datum*) _____

Name, dept./*Abt.* (please print / *bitte Druckschrift*) _____

Signature / *Unterschrift* _____

71686266

www.addresses.endress.com

For more Endress+Hauser product please visit: www.ainstru.com
Mail: Sales@ainstru.com

Endress+Hauser

People for Process Automation